Coram®

by HPARTS
Automotive Solutions

COMPONENTI RUOTE E SOSPENSIONE
Wheel components and suspension

GENNAIO 2024
generato il 25/01/2024

INDICE - TABLE OF CONTENTS - TABLE DE MATIERES

PRESENTAZIONE/COMPANY PROFILE Pag. 4

CUSCINETTI RUOTA Pag. 8
WHEEL BEARINGS
ROULEMENTS ROUES

DIMENSIONI – MEASURES – MESURE Pag. 154
LISTA DI COMPARAZIONE – CROSS REFERENCES – REFERENCES CROISEES Pag. 156
LISTA DI COMPARAZIONE CON L'ORIGINALE – OES CROSS REFERENCES – OES REFERENCES CROISEES Pag. 171
LISTA DI COMPARAZIONE CON COMPETITORS – COMPETITORS CROSS REFERENCES – REFERENCES CROISEES AVEC CODES DES CONCURRENTS Pag. 177
IMMAGINI – IMAGES – IMAGES Pag. 180

MOZZI RUOTA Pag. 196
WHEEL HUBS
MOYEUX DE ROUE

LISTA DI COMPARAZIONE – CROSS REFERENCES – REFERENCES CROISEES Pag. 279
LISTA DI COMPARAZIONE CON L'ORIGINALE – OES CROSS REFERENCES – OES REFERENCES CROISEES Pag. 296
LISTA DI COMPARAZIONE CON COMPETITORS – COMPETITORS CROSS REFERENCES – REFERENCES CROISEES AVEC CODES DES CONCURRENTS Pag. 302
IMMAGINI – IMAGES – IMAGES Pag. 306

KIT RUOTA Pag. 334
WHEEL BEARING KITS
KITS ROULEMENTS ROUES

DIMENSIONI – MEASURES – MESURE Pag. 538
LISTA DI COMPARAZIONE – CROSS REFERENCES – REFERENCES CROISEES Pag. 539
LISTA DI COMPARAZIONE CON L'ORIGINALE – OES CROSS REFERENCES – OES REFERENCES CROISEES Pag. 568
LISTA DI COMPARAZIONE CON COMPETITORS – COMPETITORS CROSS REFERENCES – REFERENCES CROISEES AVEC CODES DES CONCURRENTS Pag. 579
IMMAGINI – IMAGES – IMAGES Pag. 585

CROCIERE TRIPODI Pag. 603
CROSS JOINTS
CROISILLONS

LISTA DI COMPARAZIONE – CROSS REFERENCES – REFERENCES CROISEES Pag. 623
LISTA DI COMPARAZIONE CON L'ORIGINALE – OES CROSS REFERENCES – OES REFERENCES CROISEES Pag. 626
LISTA DI COMPARAZIONE CON COMPETITORS – COMPETITORS CROSS REFERENCES – REFERENCES CROISEES AVEC CODES DES CONCURRENTS Pag. 627
IMMAGINI – IMAGES – IMAGES Pag. 628

CROCIERE CARDANICHE Pag. 633
UNIVERSAL CROSS JOINTS
JOINTS DE CARDAN

LISTA DI COMPARAZIONE – CROSS REFERENCES – REFERENCES CROISEES Pag. 638
LISTA DI COMPARAZIONE CON L'ORIGINALE – OES CROSS REFERENCES – OES REFERENCES CROISEES Pag. 639
IMMAGINI – IMAGES – IMAGES Pag. 640

INDICE - TABLE OF CONTENTS - TABLE DE MATIERES

CUSCINETTI AMMORTIZZATORI Pag. 642
SHOCK ABSORBER BEARINGS
ROULEMENTS AMORTISSEUR

LISTA DI COMPARAZIONE – CROSS REFERENCES – REFERENCES CROISEES Pag. 740
LISTA DI COMPARAZIONE CON L'ORIGINALE – OES CROSS REFERENCES – OES REFERENCES CROISEES Pag. 746
LISTA DI COMPARAZIONE CON COMPETITORS – COMPETITORS CROSS REFERENCES – REFERENCES CROISEES AVEC CODES DES CONCURRENTS Pag. 749
IMMAGINI – IMAGES – IMAGES Pag. 751

GIUNTI OMOCINETICI Pag. 756
CV-JOINTS
JOINTS HOMOCINETIQUES

LISTA DI COMPARAZIONE – CROSS REFERENCES – REFERENCES CROISEES Pag. 779
LISTA DI COMPARAZIONE CON L'ORIGINALE – OES CROSS REFERENCES – OES REFERENCES CROISEES Pag. 783
LISTA DI COMPARAZIONE CON COMPETITORS – COMPETITORS CROSS REFERENCES – REFERENCES CROISEES AVEC CODES DES CONCURRENTS Pag. 785
IMMAGINI – IMAGES – IMAGES Pag. 786

PERNI FUSI Pag. 790
PINS FOR STUB AXLES
PIVOTS

IMMAGINI – IMAGES – IMAGES Pag. 791

GHIERE Pag. 793
PLUG FOR WHEEL BEARINGS LOCKING
FRETTE BLOCAGE ROULEMENT ROUE ET DEMI-ESSIEUX

IMMAGINI – IMAGES – IMAGES Pag. 794

CONDIZIONI DI VENDITA – GENERAL TERMS AND CONDITIONS OF SALE – TERMES GENERAUX DE VENTE Pag. 795

HPARTS

Automotive Solutions

HPARTS

Automotive Solutions

Di recente Coram è stata acquisita da Holding Parts, una grande realtà operante nell'Aftermarket Automotive che concentra aziende di successo con una grande vocazione internazionale; una nuova sfida che porterà alla crescita della società e al miglioramento di una modalità produttiva, logistica, commerciale e distributiva già consolidata.

Holding Parts, a large company operating in the Automotive Aftermarket that concentrates successful companies with a great international focus, has recently acquired Coram; a new challenge that will lead to the Company's growth and the improvement of production logistics, commercial, and distribution modality already consolidated.

Coram® "AIR TOP ITALIA" GPC

Coram®

by HPARTS
Automotive Solutions

CUSCINETTI RUOTA AUTO E VEICOLI COMMERCIALI
Wheel bearings for cars and commercial vehicles

ALFA ROMEO							
MODELLO MODEL	ANNO YEAR	ANT I FRONT INNER	ANT E FRONT OUTER	NOTE NOTES	POST I REAR INNER	POST E REAR OUTER	NOTE NOTES
145							
1.4 i.e 16V T.S. - 1.6 i.e 16V T.S.	96-01	CR099		Single			
1.8 i.e 16V - 2.0 16V	98-01	CR099		Single			
1.9 JTD	99-01	CR099		Single			
1.9 TD	94-99	CR099		Single			
2.0 16V T.S.	95-01	CR099		Single			
146							
1.4 i.e 16V T.S. - 1.6 i.e 16V T.S.	96-01	CR099		Single			
1.8 i.e 16V	96-01	CR099		Single			
1.9 JTD	99-01	CR099		Single			
2.0 16V	97-01	CR099		Single			
ALFA 145/146							
1.3-1.6-1.7-1.9 TD	94->	CR016		Single			
ALFA 155							
1.7-1.8-2.0-1.9 TD	92->	CR016		Single			
ALFA 164							
Tutti i tipi/All types/Tous types	88->	CR016		Single			
ALFA 33							
Tutti i tipi/All types/Tous types	83->	CR004		Single	CR005	CR006	
1.2-1.3-1.5-1.7	90->	CR016		Single	CR005	CR006	
4x4	83-89	CR004		Single			
4x4	90->	CR016		Single			
ALFA 6							
Tutti i tipi/All types/Tous types	79-85	CR014	CR013		CR004		Single
ALFA 75							
Tutti i tipi/All types/Tous types	79->	CR005	CR006		CR004		Single
Quadrifoglio verde	85-87	CR005	CR013		CR004		Single
Turbo	89->	CR014	CR013				

follow ALFA ROMEO

MODELLO MODEL	ANNO YEAR	ANT I FRONT INNER	ANT E FRONT OUTER	NOTE NOTES	POST I REAR INNER	POST E REAR OUTER	NOTE NOTES
ALFA 90							
Tutti i tipi/All types/Tous types	85->	CR005	CR006		CR004		Single
Quadrifoglio oro	85-87	CR005	CR013		CR004		Single
ALFASPRINT							
Tutti i tipi/All types/Tous types	83-89	CR004		Single	CR005	CR006	
ALFASUD							
Tutti i tipi/All types/Tous types	71-87				CR005	CR006	
Tutti i tipi/All types/Tous types	87-89	CR004		Single			
ALFETTA							
1.6 RTD - 1.6 RTI	72-76	CR023	CR006		CR004		Single
1.6-1.8	->6.76		CR006		CR004		Single
1.6-1.8-2.0 GT-GTV	76-79	CR005	CR006		CR004		Single
1.6-1.8-2.0 GT-GTV	80->	CR005	CR013		CR004		Single
2.0 GT-GTV	74-76	CR023	CR006		CR004		Single
ARNA							
Tutti i tipi/All types/Tous types	83-86	CR004		Single	CR005	CR013	
GIULIETTA							
1.3-1.6	78-79	CR005	CR006		CR004		Single
1.3-1.6-1.8	80-85	CR005	CR013		CR004		Single
GTV							
1.8 16V	98-05	CR099		Single			
2.0	85-87	CR005	CR013		CR004		Single
2.0 JTS	03-05	CR099		Single			
2.0 T.S 16v	95->	CR016		Single			
2.0 T.SPARK 16V	97-03	CR099		Single			
2.5 6	81-87	CR005	CR013		CR004		Single
SPIDER							
1.8 16V	98-05	CR099		Single			
2.0 JTS	03-05	CR099		Single			
2.0 T.S	95->	CR016		Single			
2.0 T.SPARK 16V	95-05	CR099		Single			

AUDI

MODELLO MODEL	ANNO YEAR	ANT I FRONT INNER	ANT E FRONT OUTER	NOTE NOTES	POST I REAR INNER	POST E REAR OUTER	NOTE NOTES
100							
Tutti i tipi/All types/Tous types	75-76	CR004		Single	CR005	CR013	
Tutti i tipi/All types/Tous types	85-87				CR005	CR013	
Tutti i tipi/All types/Tous types	88->				CR005	CR013	
Avant	76-85	CR004		Single	CR005	CR013	
Quattro-Quat.Avant	84-88	CR004		Single			
200							
Tutti i tipi/All types/Tous types	85->	CR004		Single	CR005	CR013	
Tutti i tipi/All types/Tous types	85-87				CR005	CR013	
Tutti i tipi/All types/Tous types	88->				CR005	CR013	
Quattro-Quat.Avant	84-88	CR004		Single			
50							
Tutti i tipi/All types/Tous types	73->				CR005	CR006	
60							
Tutti i tipi/All types/Tous types	->69					CR006	
Tutti i tipi/All types/Tous types	69-72				CR005	CR006	
75							
Tutti i tipi/All types/Tous types	->69					CR006	
Tutti i tipi/All types/Tous types	69-72				CR005	CR006	
80							
Tutti i tipi/All types/Tous types	73-88	CR007		Single	CR005	CR006	
Tutti i tipi/All types/Tous types	88-91				CR005	CR006	
Tutti i tipi/All types/Tous types	91->				CR005	CR013	
1.6v	91->				CR005	CR013	
Quattro	83-88	CR007		Single	CR004	CR004	
80 Avant							
1.6 - 2.0 E 16V	86-91	CR124		Single			
1.9 TD - 2.3 E quattro	88-90	CR124		Single			
1.9 TDI - 2.0 - 2.0 E - 2.3 E	88-91	CR124		Single			

follow AUDI

MODELLO MODEL	ANNO YEAR	ANT I FRONT INNER	ANT E FRONT OUTER	NOTE NOTES	POST I REAR INNER	POST E REAR OUTER	NOTE NOTES
80 Tre volumi							
1.4	86-88	CR124		Single			
1.6	86-94	CR124		Single			
1.6 D	87-89	CR124		Single			
1.6 E	93-94	CR124		Single			
1.6 TD - 1.8 E - 1.8 E quattro - 1.8 S	86-91	CR124		Single			
1.8 - 1.8 quattro	86-90	CR124		Single			
1.8 S quattro	86-91	CR124		Single			
1.9 D	89-91	CR124		Single			
1.9 TD - 1.9 TDI - 2.3 E - 2.3 E quattro	91-94	CR124		Single			
2.0 - 2.0 E 16V - 2.0 E 16V quattro	90-94	CR124		Single			
2.0 E - 2.0 E quattro	88-94	CR124		Single			
2.0 quattro	88-91	CR124		Single			
2.6 quattro	92-94	CR124		Single			
2.8 quattro	91-94	CR124		Single			
90							
Tutti i tipi/All types/Tous types	84->	CR007		Single	CR005	CR006	
1.6 TD - 2.2 E - 2.2 E quattro	87-91	CR124		Single			
2.0	84-91	CR124		Single			
2.0 20V	89-91	CR124		Single			
2.0 20V quattro - 2.3 E 20V quattro	88-91	CR124		Single			
2.2	84-87	CR124		Single			
2.3 E - 2.3 E quattro	87-91	CR124		Single			
5 Cil.	88->				CR005	CR006	
Quattro	84-87	CR007		Single	CR004	CR004	
Quattro	87->				CR004	CR004	
Super	->69					CR006	
Super	69-72				CR005	CR006	
A3							
1.6-1.8-1.8 T-1.8 T quattro	96->	CR081		Single			
1.9 TDI	96->	CR081		Single			
1.9 TDI quattro	00->	CR081		Single			
S3 quattro	99->	CR081		Single			
A4							
1.6 - 1.8	94-00	CR124		Single			
1.6-1.8-2.6-2.8	95->				CR005	CR013	
1.8 T - 1.8 T quattro - 1.8 quattro	95-00	CR124		Single			
1.9 TDI	95->				CR005	CR013	
1.9 TDI - 2.6 quattro	95-00	CR124		Single			

follow AUDI							
MODELLO MODEL	**ANNO YEAR**	**ANT I FRONT INNER**	**ANT E FRONT OUTER**	**NOTE NOTES**	**POST I REAR INNER**	**POST E REAR OUTER**	**NOTE NOTES**
A4 Avant							
1.6	94-01	CR124		Single			
1.8 - 1.8 T - 1.8 T quattro - 1.8 quattro	96-01	CR124		Single			
1.9 Hybrid	98-00	CR124		Single			
1.9 TDI - 1.9 TDI quattro	95-00	CR124		Single			
2.4 quattro - 2.5 TDI quattro - S4 quattro	97-01	CR124		Single			
2.6 quattro - 2.8 quattro	96-01	CR124		Single			
RS4 quattro	00-01	CR124		Single			
A6							
Tutti i tipi/All types/Tous types	95->				CR005	CR013	
1.8 - 1.8 T - 1.8 T quattro	97-05	CR124		Single			
A6 AVANT							
Tutti i tipi/All types/Tous types	95->				CR005	CR013	
1.8 - 1.8 T - 1.8 T quattro	97-05	CR124		Single			
CABRIOLET							
1.8	97-00	CR124		Single			
1.9 TDI	95-00	CR124		Single			
2.0 E	93-98	CR124		Single			
2.0-2.3-2.6-2.8	91->				CR005	CR013	
2.3 E	91-94	CR124		Single			
COUPE'							
Tutti i tipi/All types/Tous types	81->	CR007		Single	CR005	CR006	
1.8	89-91	CR124		Single			
2.0	89-96	CR124		Single			
2.0 16V - 2.6 quattro	92-96	CR124		Single			
2.2 quattro	88-91	CR124		Single			
2.3 20V quattro - 2.3 quattro	88-96	CR124		Single			
2.8 quattro	91-96	CR124		Single			
Quattro	84->	CR007		Single	CR004		Single
QUATTRO							
Tutti i tipi/All types/Tous types	80-85	CR004		Single	CR004		Single

follow AUDI

MODELLO MODEL	ANNO YEAR	ANT I FRONT INNER	ANT E FRONT OUTER	NOTE NOTES	POST I REAR INNER	POST E REAR OUTER	NOTE NOTES
TT							
1.8 T - 1.8 T quattro 3.2 VR6 quattro	98-06 03-06	CR081 CR081		Single Single			
TT Roadster							
1.8 T - 1.8 T quattro 3.2 VR6 quattro	99-06 03-06	CR081 CR081		Single Single			

AUSTIN-ROVER

MODELLO MODEL	ANNO YEAR	ANT I FRONT INNER	ANT E FRONT OUTER	NOTE NOTES	POST I REAR INNER	POST E REAR OUTER	NOTE NOTES
ALLEGRO							
1.1-1.3-1.5-1.7	73-83					CR006	
ROVER 2000-2200							
Tutti i tipi/All types/Tous types	->76	CR014	CR013				
ROVER 3500-3500S							
Tutti i tipi/All types/Tous types SD	68-75 76->	CR014 CR014	CR013 CR013				

BMW

MODELLO MODEL	ANNO YEAR	ANT I FRONT INNER	ANT E FRONT OUTER	NOTE NOTES	POST I REAR INNER	POST E REAR OUTER	NOTE NOTES
1500							
Tutti i tipi/All types/Tous types	62-64	CR023	CR006				
1600							
Tutti i tipi/All types/Tous types TI TI-GT	66-67 66-67 67->	CR023 CR023 CR005	CR006 CR006 CR006				
1800							
Tutti i tipi/All types/Tous types	66->	CR014	CR013				

follow BMW							
MODELLO MODEL	**ANNO YEAR**	**ANT I FRONT INNER**	**ANT E FRONT OUTER**	**NOTE NOTES**	**POST I REAR INNER**	**POST E REAR OUTER**	**NOTE NOTES**
1802							
Tutti i tipi/All types/Tous types	67->	CR005	CR006				
2000							
Tutti i tipi/All types/Tous types	66->	CR014	CR013				
2002							
Tutti i tipi/All types/Tous types TI	67-> 68->	CR005 CR014	CR006 CR013				
2200							
TI	68->	CR014	CR013				
SERIE 1							
116 d 116 i - 118 d - 118 i 120 d - 120 i 123 d 130 i	08-11 04-11 04-11 07-11 05-11				CR091 CR091 CR091 CR090 CR090		Single Single Single Single Single
SERIE 1 Cabriolet							
118 d - 118 i - 120 d 120 i - 125 i 123 d - 135 i	08-13 07-13 08-13				CR091 CR091 CR090		Single Single Single
SERIE 1 Coupé							
118 d 120 d - 120 i 123 d - 135 i 125 i M	09-13 07-13 07-13 08-13 11-12				CR091 CR091 CR090 CR091 CR090		Single Single Single Single Single

follow BMW

MODELLO MODEL	ANNO YEAR	ANT I FRONT INNER	ANT E FRONT OUTER	NOTE NOTES	POST I REAR INNER	POST E REAR OUTER	NOTE NOTES
SERIE 3							
315-315-318-320	->76	CR005	CR006				
316 - 316 (Ecotronic) - 325 e 2.7	83-88				CR091		Single
316 d	98-11				CR091		Single
316-316i-318i-320i	82->				CR012		Single
316-316i-320i ABS	85->				CR004		Single
316-318 Compact	93->				CR012		Single
316-318-320	76->	CR005	CR006				
316-320i-cabrio ABS	82-85				CR012		Single
316i - 320 d - 320 i	98-11				CR091		Single
316i - 324 td	87-91				CR091		Single
316i-318i	91->				CR012		Single
318 d	01-11				CR091		Single
318 d - 330 d - 323 i	05-11				CR090		Single
318 i	82-91				CR091		Single
318 i	97-11				CR091		Single
318 TDS Touring	95->				CR004		Single
318 TDS-318 Cabrio	94->				CR004		Single
318i-318 Touring	94->				CR004		Single
320 d - 325 i - 330 i	04-11				CR090		Single
320 is	88-90				CR091		Single
320 xDrive	05-06				CR090		Single
320 xDrive	08-11				CR090		Single
320/6-323i	->82	CR014	CR013				
320i	76-82	CR014	CR013				
320i	->76	CR014	CR013				
320i	82-91				CR091		Single
320i cabrio-320i tour.	86->				CR012		Single
320i cabrio-323iABS	85->				CR004		Single
320i Tour.-323i ABS	82-85				CR012		Single
320i Touring ABS	85->				CR004		Single
320i-325i	91->				CR004		Single
323i	82-85				CR012		Single
323i	83-86				CR091		Single
323i - 328 i	98-00				CR091		Single
323i-325E	85->				CR004		Single
324 d	85-90				CR091		Single
324 D-TD ABS	85->				CR004		Single
324 D-TD-TD Tour.	85->				CR004		Single
324 TD Touring ABS	87->				CR004		Single
325 d	06-11				CR090		Single
325 i	83-91				CR091		Single
325 i	00-11				CR091		Single
325 i - M3	07-11				CR090		Single
325 i X - M3 2.3	86-91				CR091		Single
325 i xDrive - 330 d xDrive	08-11				CR090		Single

follow BMW

MODELLO MODEL	ANNO YEAR	ANT I FRONT INNER	ANT E FRONT OUTER	NOTE NOTES	POST I REAR INNER	POST E REAR OUTER	NOTE NOTES
SERIE 3 Cabriolet							
316 i Baur TC	87-89				CR091		Single
318 Ci	01-07				CR091		Single
318 i	90-93				CR091		Single
318 i	10-13				CR091		Single
320 Cd	05-07				CR091		Single
320 Ci	00-07				CR091		Single
320 d - 320 i - 325 d	07-13				CR090		Single
320 i	86-93				CR091		Single
320 i	07-13				CR091		Single
323 Ci	00				CR091		Single
325 Ci	00-06				CR091		Single
325 i	85-93				CR091		Single
325 i - 335 i	06-13				CR090		Single
330 d - 330 i	07-13				CR090		Single
M3	08-13				CR090		Single
M3 2.3	88-91				CR091		Single
SERIE 3 Compact							
316 ti - 320 td	01-05				CR091		Single
318 td	03-05				CR091		Single
318 ti - 325 ti	01-04				CR091		Single
323 ti	97-00				CR091		Single
SERIE 3 Coupé							
316 Ci - 325 Ci	00-06				CR091		Single
316 i - 320 i	07-13				CR091		Single
318 Ci - 320 Ci	99-06				CR091		Single
318 i	10-13				CR091		Single
318 ti - 325 ti	01-04				CR091		Single
320 Cd	03-06				CR091		Single
320 d - 325 i	06-13				CR091		Single
320 d xDrive - 325 i xDrive	08-13				CR090		Single
323 Ci	03-06				CR091		Single
325 d - M3 - M3 GTS	07-13				CR090		Single
325 xi - 330 xd	06-10				CR090		Single
330 d - 330 i - 335 d - 335 i	06-13				CR090		Single
330 d xDrive - 330 i xDrive	10-13				CR090		Single
330 xi	06-07				CR090		Single
335 i xDrive	08-13				CR090		Single
335 xi	07-10				CR090		Single

follow BMW

MODELLO MODEL	ANNO YEAR	ANT I FRONT INNER	ANT E FRONT OUTER	NOTE NOTES	POST I REAR INNER	POST E REAR OUTER	NOTE NOTES
SERIE 3 Touring							
316 d	09-12				CR091		Single
316 d - 330 d xDrive	09-12				CR090		Single
316 i	91-94				CR091		Single
316 i	08-12				CR091		Single
318 d	02-05				CR091		Single
318 d	07-12				CR091		Single
318 d - 320 i - 330 i	05-12				CR090		Single
318 i	99-12				CR091		Single
318 i - 325 d - 335 d - 335 i	06-12				CR090		Single
320 d	00-12				CR091		Single
320 d - 325 i - 330 d	04-12				CR090		Single
320 d xDrive - 325 i xDrive	08-12				CR090		Single
320 i	99-05				CR091		Single
320 i	00-05				CR091		Single
323 i	06-08				CR090		Single
324 td - 325 i X	88-93				CR091		Single
325 i	87-93				CR091		Single
325 xi	05-08				CR090		Single
328 i	99-00				CR091		Single
330 i xDrive	07-12				CR090		Single
330 xd - 330 xi	05-12				CR090		Single
335 i xDrive	08-12				CR090		Single
335 xi	07-08				CR090		Single
SERIE 5							
518-520-525-528	->80	CR014	CR013				
518-520-525-528	80->	CR014	CR013				
528i (2.5-2.8-3.0)	->80	CR014	CR013				
535i	73-81	CR032	CR033				
SERIE 6							
628 CSI-635 CSI	->86	CR014	CR013				
628-630-633-635 CSI (E24)	78-82	CR032	CR033				
SERIE 7							
728-730-732-733-735 (E23)	77-86	CR032	CR033				
740-745	77-86	CR032	CR033				
Z1 Roadster							
2.5	88-91				CR091		Single

follow BMW

MODELLO MODEL	ANNO YEAR	ANT I FRONT INNER	ANT E FRONT OUTER	NOTE NOTES	POST I REAR INNER	POST E REAR OUTER	NOTE NOTES
Z3 Coupé							
3.0 i	00-03				CR091		Single
Z3 Roadster							
1.9 i	98-03				CR091		Single
2.0 i	99-03				CR091		Single
2.2 i	00-02				CR091		Single
2.8 i	96-00				CR091		Single
3.0 i	00-03				CR091		Single
Z4 Coupé							
2.2 i	03-05				CR091		Single
2.5 i	02-09				CR091		Single
2.5 si - 3.0 si	06-08				CR091		Single
3.0 i	02-05				CR091		Single
3.0 si	06-08				CR091		Single
sDrive 18i	13-16				CR091		Single
sDrive 20i - sDrive 28 i	11-16				CR091		Single
sDrive 23i - sDrive 30 i	09-11				CR091		Single
sDrive 35 i	09-16				CR091		Single
sDrive 35 is	10-16				CR091		Single
Z4 Roadster							
2.0 i	05-09				CR091		Single

CHEVROLET

MODELLO MODEL	ANNO YEAR	ANT I FRONT INNER	ANT E FRONT OUTER	NOTE NOTES	POST I REAR INNER	POST E REAR OUTER	NOTE NOTES
MATIZ							
0.8 - 1.0	05->	CR074	CR074				
SPARK							
1.0 SX	05->	CR074	CR074				

CITROEN							
MODELLO MODEL	ANNO YEAR	ANT I FRONT INNER	ANT E FRONT OUTER	NOTE NOTES	POST I REAR INNER	POST E REAR OUTER	NOTE NOTES
AX							
1.0-1.1-1.4	87-98				CR042		Single
1.4	91->		CR018				
1.4 D	89-95				CR042		Single
1.5 D	95->		CR018		CR042		Single
GT-GTI	89-91		CR018		CR025		Single
Sport	87-91				CR042		Single
BERLINGO							
1.1-1.4	96->		CR040				
1.4	09->	CR084		Single	CR085		Single
1.6 - 1.6 HDI 110	08->	CR084		Single	CR085		Single
1.6 HDI 115	10->	CR084		Single	CR085		Single
1.6 HDI 75 - 1.6 HDI 90	08->	CR084		Single	CR085		Single
1.6 VTI 120	09->	CR084		Single	CR085		Single
1.6 VTI 95	10->	CR084		Single	CR085		Single
1.8 D - 1.9 D	96->		CR040				
BERLINGO Cassone							
1.6 - 1.6 Hdi 75	08->	CR093		Single			
1.6 Hdi 90 - 1.6 Hdi 110	08->	CR093		Single			
1.6 Vti 95	10->	CR093		Single			
BERLINGO Furgonato							
1.6 - 1.6 HDI 90	08->	CR084		Single	CR085		Single
1.6 HDI 115 - 1.6 VTI 95	10->	CR084		Single	CR085		Single
1.6 HDI 75 - 1.6 HDI 110	08->	CR084		Single	CR085		Single
1.6 VTI 120	09->	CR084		Single	CR085		Single
Electric	11->	CR084		Single	CR085		Single
BERLINGO MULTISPACE							
1.6 - 1.6 Hdi 75 16V	08->	CR093		Single			
1.6 Hdi 90 - 1.6 Hdi 110	08->	CR093		Single			
1.6 Vti 120	09->	CR093		Single			
1.6 Vti 95	10->	CR093		Single			
BERLINGO Pianale piatto							
1.6 HDI 90	08->	CR084		Single	CR085		Single

follow CITROEN

MODELLO MODEL	ANNO YEAR	ANT I FRONT INNER	ANT E FRONT OUTER	NOTE NOTES	POST I REAR INNER	POST E REAR OUTER	NOTE NOTES
BX							
1.4-1.6-1.9	84->	CR040		Single			
1.7 D - 1.7 TD	87-	CR040		Single			
1.9 4x4	88->	CR040		Single		CR040	
1.9 D - 1.9 GTI	84->	CR040		Single			
C1							
1.0 - 1.4 HDi	05-14	CR122		Single			
C1 II							
1.0 VTi 68 - 1.0 VTi 82	14->	CR122		Single			
1.0 VTi 72	18->	CR122		Single			
C2							
1.1	03-12				CR092		Single
1.1	03-12	CR095		Single			
1.4 - 1.4 Hdi	03-09				CR092		Single
1.4 - 1.4 Hdi	03-09	CR095		Single			
1.4 16V - 1.6 Hdi	05-09				CR092		Single
1.4 16V - 1.6 Hdi	05-09	CR095		Single			
1.6	03-10				CR092		Single
1.6	03-10	CR095		Single			
1.6 VTS	04-09				CR092		Single
1.6 VTS	04-09	CR095		Single			
C2 ENTERPRISE							
1.1 - 1.4 Hdi	03-09	CR095		Single			
1.4 Hdi	06-09				CR092		Single
C25							
1000	82-94	CR051	CR051		CR049	CR050	
1300	82->	CR051	CR051		CR049	CR050	
1400	87->	CR051	CR051		CR049	CR050	
1800	86-94	CR051	CR051				
4x4	86-92	CR051	CR051				

follow CITROEN

MODELLO MODEL	ANNO YEAR	ANT I FRONT INNER	ANT E FRONT OUTER	NOTE NOTES	POST I REAR INNER	POST E REAR OUTER	NOTE NOTES
C3 I							
1.1 i - 1.4 16V Hdi - 1.4 Hdi	02->				CR092		Single
1.1 i - 1.4 16V Hdi - 1.4 Hdi	02->	CR095		Single			
1.1 LPG	06-09	CR095		Single			
1.4 16V	03->				CR092		Single
1.4 BiFuel	08-09	CR095		Single			
1.4 i - 1.6 16V	02-10				CR092		Single
1.4 i - 1.6 16V	02-10	CR095		Single			
1.4 i Bivalent	02->	CR095		Single			
1.6 16V	02-10	CR093		Single			
1.6 16V HDI	05->	CR084		Single			
1.6 16V HDI	05->				CR092		Single
1.6 16V HDI	05->	CR093		Single			
1.6 16V HDI	05->	CR095		Single			
C3 II							
1. 4 Hdi 70 - 1.4 Vti - 1.4 Vti 95					CR094		Single
1. 4 Hdi 70 - 1.6 Hdi 90	09->				CR092		Single
1. 4 Hdi 70 - 1.6 Hdi 90	09->	CR093		Single			
1.0 VTI 68	12->	CR084		Single	CR086		Single
1.0 VTI 68 - 1.6 Hdi 115	12->				CR094		Single
1.1	09->	CR084		Single	CR086		Single
1.1	09-13				CR094		Single
1.1 BiFuel	10->	CR084		Single	CR086		Single
1.2 THP 110 - 1.6 BlueHDi 100	14->				CR094		Single
1.2 VTI 82	12->	CR084		Single	CR086		Single
1.4 - 1.4 HDI 70	09->	CR084		Single	CR086		Single
1.4 - 1.6 Hdi	02->				CR092		Single
1.4 - 1.6 Hdi	09-16	CR093		Single			
1.4 - 1.6 Hdi	09-16				CR094		Single
1.4 LPG	13->	CR084		Single	CR086		Single
1.4 LPG	10->				CR094		Single
1.4 VTI 95 - 1.6 HDI	09->	CR084		Single	CR086		Single
1.6 BlueHDi 75	15->				CR094		Single
1.6 HDI 110	09->	CR084		Single	CR086		Single
1.6 HDI 110 - 1.6 Hdi 90	09->				CR094		Single
1.6 HDI 110 - 1.6 Vti 120	09->				CR092		Single
1.6 HDI 110 - 1.6 Vti 120	09->	CR093		Single			
1.6 HDI 115	12->	CR084		Single	CR086		Single
1.6 VTI 120	09->	CR084		Single	CR086		Single
1.6 VTI 120	09->				CR094		Single

follow CITROEN

MODELLO MODEL	ANNO YEAR	ANT I FRONT INNER	ANT E FRONT OUTER	NOTE NOTES	POST I REAR INNER	POST E REAR OUTER	NOTE NOTES
C3 II Cassone							
1.4 Hdi	10-16				CR094		Single
1.6 BlueHDi	15-16				CR094		Single
C3 III							
1.2 PureTech 82 - 1.5 BlueHDi 100	18->				CR094		Single
1.2 THP 110 - 1.2 Vti 68	16->				CR094		Single
1.2 Vti 82 - 1.6 BlueHDi 100	16->				CR094		Single
1.6 BlueHDi 75	16->				CR094		Single
1.6 Vti	17->				CR094		Single
C3 PICASSO							
1.4 VTI 95	09->	CR084		Single	CR086		Single
1.4 VTI 95 - 1.6 Hdi - 1.6 Vti 120	09->	CR093		Single			
1.4 VTI 95 LPG	09->	CR084		Single	CR086		Single
1.6 HDI	09->	CR084		Single	CR086		Single
1.6 HDI 110	10->	CR084		Single	CR086		Single
1.6 HDI 115	13->	CR084		Single	CR086		Single
1.6 HDI 90	10->	CR084		Single	CR086		Single
1.6 Hdi 90 - 1.6 Hdi 110	10->	CR093		Single			
1.6 VTI 120	09->	CR084		Single	CR086		Single
C3 Pluriel							
1.4 - 1.6	03->				CR092		Single
1.4 - 1.6	03->	CR095		Single			
1.4 Hdi	04->				CR092		Single
1.4 Hdi	04->	CR095		Single			
1.6	10->	CR093		Single			
C4 CACTUS							
1.2 PureTech 130	17->				CR094		Single
1.2 THP 110 - 1.2 VTi 82	14->				CR094		Single
1.2 Vti 75 / PureTech 75	14->				CR094		Single
1.5 BlueHDi 100 - 1.5 BlueHDi 120	18->				CR094		Single
1.6 BlueHDi 100 - 1.6 Hdi 90	14->				CR094		Single

follow CITROEN

MODELLO MODEL	ANNO YEAR	ANT I FRONT INNER	ANT E FRONT OUTER	NOTE NOTES	POST I REAR INNER	POST E REAR OUTER	NOTE NOTES
C4 Coupè							
1.4 16V - 1.6 16V - 1.6 HDI	04->	CR084		Single	CR086		Single
1.4 16V - 1.6 16V - 1.6 HDI	04-11	CR093		Single	|		
1.4 16V - 1.6 16V - 1.6 HDI	04-11	|			CR096		Single
1.6 THP 150 - 1.6 VTI 120	08->	CR084		Single	CR086		Single
1.6 THP 150 - 1.6 VTI 120	08-11	CR093		Single	|		
1.6 THP 150 - 1.6 VTI 120	08-11	|			CR096		Single
2.0 16V	04-10	|			CR096		Single
2.0 16V - 2.0 HDI	04->	CR084		Single	CR086		Single
2.0 16V - 2.0 HDI	04-10	CR093		Single	|		
2.0 Hdi	04-11	|			CR096		Single
C4 GRAND PICASSO I							
1.6 16V	08->	CR084		Single	CR085		Single
1.6 16V - 1.6 Vti 120	08-13	CR093		Single	|		
1.6 HDI	06->	CR084		Single	CR085		Single
1.6 HDI	06-11	CR093		Single	|		
1.6 HDI 110 - 1.6 THP 155	10->	CR084		Single	CR085		Single
1.6 VTI 120	08->	CR084		Single	CR085		Single
1.8 i 16V	06->	CR084		Single	CR085		Single
1.8 i 16V	06-10	CR093		Single	|		
2.0 HDI 138	06->	CR084		Single	CR085		Single
2.0 HDI 138 - 2.0 i 16V	06-13	CR093		Single	|		
2.0 HDI 150	09->	CR084		Single	CR085		Single
2.0 HDI 165	10->	CR084		Single	CR085		Single
2.0 i 16V	06->	CR084		Single	CR085		Single

follow CITROEN

MODELLO MODEL	ANNO YEAR	ANT I FRONT INNER	ANT E FRONT OUTER	NOTE NOTES	POST I REAR INNER	POST E REAR OUTER	NOTE NOTES
C4 I							
1.4 16V - 1.6 16V	04->	CR084		Single	CR086		Single
1.4 16V - 1.6 16V - 1.6 Hdi	04-11	CR093		Single	|		
1.4 16V - 1.6 16V - 1.6 Hdi	04-11	|			CR096		Single
1.6 16V Bio-Flex	07->	CR084		Single	CR086		Single
1.6 16V Bio-Flex	07-08	|			CR096		Single
1.6 HDI	04->	CR084		Single	CR086		Single
1.6 THP 140 - 1.6 THP 150	08->	CR084		Single	CR086		Single
1.6 THP 140 - 1.6 THP 150	08-11	CR093		Single	|		
1.6 THP 140 - 1.6 THP 150	08-11	|			CR096		Single
1.6 VTI 120	08->	CR084		Single	CR086		Single
1.6 VTI 120	08-11	CR093		Single	|		
1.6 VTI 120	08-11	|			CR096		Single
2.0 16V	04->	CR084		Single	CR086		Single
2.0 16V - 2.0 Hdi	04-11	CR093		Single	|		
2.0 16V - 2.0 Hdi	04-11	|			CR096		Single
2.0 HDI	04->	CR084		Single	CR086		Single
2.0 Hdi	05-10	|			CR096		Single
C4 II							
1.4 VTI 95	09->	CR084		Single	CR085		Single
1.4 VTI 95	09-11	CR093		Single	|		
1.6 HDI 110	09->	CR084		Single	CR085		Single
1.6 HDI 110 - 1.6 Hdi 90	09->	CR093		Single	|		
1.6 HDI 115	12->	CR084		Single	CR085		Single
1.6 HDI 90 - 1.6 THP 155	09->	CR084		Single	CR085		Single
1.6 VTI 120	09->	CR084		Single	CR085		Single
1.6 VTI 120	09-16	CR093		Single	|		
1.6 VTI 120 LPG	11->	CR084		Single	CR085		Single
2.0 HDI 150	09->	CR084		Single	CR085		Single

follow CITROEN

MODELLO MODEL	ANNO YEAR	ANT I FRONT INNER	ANT E FRONT OUTER	NOTE NOTES	POST I REAR INNER	POST E REAR OUTER	NOTE NOTES
C4 PICASSO I							
1.6 16V	08->	CR084		Single	CR085		Single
1.6 HDI	07->	CR084		Single	CR085		Single
1.6 HDI - 2.0 i 16V	07-13	CR093		Single			
1.6 HDI 110 - 1.6 THP 155	10->	CR084		Single	CR085		Single
1.6 THP 140 - 1.6 VTI 120	08->	CR084		Single	CR085		Single
1.6 THP 140 - 1.6 VTI 120	08-13	CR093		Single			
1.8 i 16V	07->	CR084		Single	CR085		Single
1.8 i 16V	07-11	CR093		Single			
2.0 HDI 138	07->	CR084		Single	CR085		Single
2.0 HDI 138	06-13	CR093		Single			
2.0 HDI 150	09->	CR084		Single	CR085		Single
2.0 HDI 165	10->	CR084		Single	CR085		Single
2.0 i 16V	07->	CR084		Single	CR085		Single
C5 I							
1.8 16V - 2.0 16V	01-04	CR084		Single			
1.8 16V - 2.0 16V	01-04	CR093		Single			
2.0 16V HPI - 2.0 HDI	01-04	CR084		Single			
2.0 16V HPI - 2.0 HDI	01-04	CR093		Single			
2.0 HDI - 2.2 HDI	01-04	CR084		Single			
3.0 V6	01-04	CR084		Single			
3.0 V6	01-04	CR093		Single			
C5 I Break							
1.8 16V - 2.0 16V	01-04	CR084		Single			
1.8 16V - 2.0 16V	01-04	CR093		Single			
2.0 16V HPI	01-04	CR084		Single			
2.0 16V HPI	01-04	CR093		Single			
2.0 HDI - 2.2 HDI	01-04	CR084		Single			
2.0 HDI - 2.2 HDI	01-04	CR093		Single			
3.0 Carlsson	03-04	CR084		Single			
3.0 V6	01-04	CR084		Single			
3.0 V6	01-04	CR093		Single			
C5 II							
1.6 HDI - 1.8 16V - 2.0 16V	04->	CR084		Single			
1.6 HDI - 1.8 16V - 2.0 16V	04->	CR093		Single			
2.0 HDI - 2.2 HDI - 3.0 V6	04->	CR084		Single			
2.0 HDI - 2.2 HDI - 3.0 V6	04->	CR093		Single			

follow CITROEN

MODELLO MODEL	ANNO YEAR	ANT I FRONT INNER	ANT E FRONT OUTER	NOTE NOTES	POST I REAR INNER	POST E REAR OUTER	NOTE NOTES
C5 II Break							
1.6 HDI - 1.8 16V - 2.0 16V	04->	CR084		Single			
1.6 HDI - 1.8 16V - 2.0 16V	04->	CR093		Single			
2.0 HDI - 2.2 HDI - 3.0 V6	04->	CR084		Single			
2.0 HDI - 2.2 HDI - 3.0 V6	04->	CR093		Single			
C-ELYSEE							
1.2 Vti 72 - 1.6 HDI 92	12->				CR094		Single
1.2 Vti 82 - 1.6 BlueHDi 100	14->				CR094		Single
1.5 BlueHDi 100	18->				CR094		Single
1.6 Vti 115	12->				CR094		Single
DS3							
1.2 THP 110	14-15				CR094		Single
1.2 VTI 82	13->	CR084		Single	CR086		Single
1.2 VTI 82	13-15				CR094		Single
1.4 Hdi 70 - 1.4 Vti 95	10-15				CR094		Single
1.4 VTI 70 - 1.4 VTI 95	10->	CR084		Single	CR086		Single
1.4 VTI 95 - 1.6 THP 155	10-15				CR092		Single
1.4 VTI 95 - 1.6 THP 155	10-15	CR093		Single			
1.4 VTI 95 LPG	12->	CR084		Single	CR086		Single
1.4 VTI 95 LPG - 1.6 Hdi 115	12-15				CR094		Single
1.4 VTI 98 - 1.6 HDI 110	09->	CR084		Single	CR086		Single
1.4 VTI 98 - 1.6 HDI 110	09-15				CR094		Single
1.6 BlueHDi 100	14-15				CR094		Single
1.6 BlueHDi 120	13-15				CR094		Single
1.6 HDI 115	12->	CR084		Single	CR086		Single
1.6 HDI 90	09->	CR084		Single	CR086		Single
1.6 Hdi 90	09-15				CR094		Single
1.6 Hdi 90 - 1.6 Hdi 110	09->				CR092		Single
1.6 Hdi 90 - 1.6 Hdi 110	09-15	CR093		Single			
1.6 Racing	11->	CR084		Single	CR086		Single
1.6 Racing	11-15				CR094		Single
1.6 THP 150 - 1.6 THP 155	11-15				CR094		Single
1.6 THP 155 - 1.6 VTI 120	10->	CR084		Single	CR086		Single
1.6 Vti 120	10-15				CR092		Single
1.6 Vti 120	10-15	CR093		Single			
1.6 Vti 120	10-15				CR094		Single

follow CITROEN

MODELLO MODEL	ANNO YEAR	ANT I FRONT INNER	ANT E FRONT OUTER	NOTE NOTES	POST I REAR INNER	POST E REAR OUTER	NOTE NOTES
DS3 Cabriolet							
1.2 THP 110 - 1.6 BlueHDi 100	14-15				CR094		Single
1.2 VTI 82 - 1.6 BlueHDi 115	13-15				CR094		Single
1.2 VTI 82 - 1.6 HDI 90	13->	CR084		Single	CR086		Single
1.6 BlueHDi 120 - 1.6 Racing	14-15				CR094		Single
1.6 HDi 90 - 1.6 THP 150	14-15				CR094		Single
1.6 THP 150 - 1.6 THP155	13->	CR084		Single	CR086		Single
1.6 THP155 - 1.6 Vti 120	13-15				CR094		Single
1.6 THP165	14-15				CR094		Single
1.6 VTI 120	13->	CR084		Single	CR086		Single
DS4							
1.6 HDI 110	11->	CR084		Single	CR085		Single
1.6 HDI 110 - 1.6 THP 155	11-15	CR093		Single			
1.6 HDI 115	12->	CR084		Single	CR085		Single
1.6 HDI 90 - 1.6 THP 155	11->	CR084		Single	CR085		Single
1.6 THP 160	12->	CR084		Single	CR085		Single
1.6 VTI 120	11->	CR084		Single	CR085		Single
1.6 VTI 120 - 2.0 Hdi 165	11-15	CR093		Single			
2.0 HDI 135 - 2.0 HDI 165	11->	CR084		Single	CR085		Single
DS5							
1.6 HDI 110	11->	CR084		Single	CR085		Single
1.6 HDI 115	12->	CR084		Single	CR085		Single
1.6 THP 155 - 1.6 THP 200	11->	CR084		Single	CR085		Single
2.0 HDI 135	11->	CR084		Single	CR085		Single
2.0 HDI 135 Hybrid 4x4	11->	CR084		Single			
2.0 HDI 165	11->	CR084		Single	CR085		Single
2.0 HDI 165 Hybrid 4x4	11->	CR084		Single			
2.0 HDI 180	13->	CR084		Single	CR085		Single
EVASION							
1.8 - 2.0	97-02	CR063		Single			
1.9 TD - 2.0 -2.0 Turbo C.T.	94-02	CR063		Single			
2.0 16V	98-02	CR063		Single			
2.0 HDI	99-02	CR063		Single			
2.1 TD	96-02	CR063		Single			

follow CITROEN

MODELLO MODEL	ANNO YEAR	ANT I FRONT INNER	ANT E FRONT OUTER	NOTE NOTES	POST I REAR INNER	POST E REAR OUTER	NOTE NOTES
JUMPER							
1000/1400 4x2	94-99	CR051	CR051		CR049	CR050	
1000/1400 4x4	96-99	CR051	CR051		CR051	CR051	
1800 4x4	96-99				CR051	CR051	
JUMPER Autobus							
1.9 D	99-02	CR077		Single			
1.9 D	99-02	CR097		Single			
1.9 D - 2.8 D	99-02				CR127		Single
1.9 TD	94-02	CR077		Single			
1.9 TD - 2.5 D - 2.5 TD	94-02	CR097		Single			
1.9 TD - 2.5 D - 2.5 TD	94-02				CR127		Single
1.9 TD 4x4 - 2.0 4x4 - 2.5 D 4x4	96-02	CR097		Single			
2.0	94->	CR097		Single			
2.0	94->				CR127		Single
2.0 - 2.0 Hdi	02->	CR077		Single			
2.0 - 2.5 D - 2.5 TD	94-02	CR077		Single			
2.0 4x4 - 2.5 D 4x4	96-02	CR077		Single			
2.0 bivalent	03->	CR097		Single			
2.0 bivalent	03->				CR127		Single
2.0 BlueHDi 110 - 2.0 BlueHDi 130	15-19	CR098		Single			
2.0 BlueHDi 160	15-19	CR098		Single			
2.0 Hdi - 2.2 Hdi	02->	CR097		Single			
2.0 Hdi - 2.2 Hdi	02->				CR127		Single
2.2 Hdi - 2.8 Hdi	02->	CR077		Single			
2.2 HDi 100 - 2.2 HDi 120 - 3.0 HDi 160	06->	CR098		Single			
2.2 HDi 110 - 2.2 HDi 130	11->	CR098		Single			
2.2 HDi 150 - 3.0 HDi 180	11->	CR098		Single			
2.5 TD 4x4	96-02	CR077		Single			
2.5 TD 4x4	96-02	CR097		Single			
2.5 Tdi	95-00	CR077		Single			
2.5 Tdi	96-00				CR127		Single
2.5 Tdi - 2.5 TDI 4x4	96-00	CR097		Single			
2.8 D	99-02	CR097		Single			
2.8 Hdi	00->				CR127		Single
2.8 Hdi - 2.8 Hdi 4x4	00-02	CR077		Single			
2.8 Hdi - 2.8 Hdi 4x4	00-02	CR097		Single			
2.8 Hdi - 2.8 Hdi Trazione integrale	02->	CR097		Single			
3.0 HDi 155	10->	CR098		Single			

follow CITROEN

MODELLO MODEL	ANNO YEAR	ANT I FRONT INNER	ANT E FRONT OUTER	NOTE NOTES	POST I REAR INNER	POST E REAR OUTER	NOTE NOTES
JUMPER Furgonato							
1.9 D - 1.9 TD - 2.0 - 2.5 D	94-02	CR077		Single			
1.9 D - 1.9 TD - 2.5 D	94-02	CR097		Single			
1.9 D - 1.9 TD - 2.5 D	94-02				CR127		Single
2.0	94->	CR097		Single			
2.0	94->				CR127		Single
2.0 - 2.0 HDI - 2.2 HDI	02->	CR077		Single			
2.0 bivalent	03->	CR077		Single			
2.0 bivalent	03->	CR097		Single			
2.0 bivalent	03->				CR127		Single
2.0 HDI	01-02	CR077		Single			
2.0 HDI	01->	CR097		Single			
2.0 HDI	01->				CR127		Single
2.2 HDI	02->	CR097		Single			
2.2 HDI	02->				CR127		Single
2.2 HDi 100 - 2.2 HDi 120 - 3.0 HDi 160	06-12	CR098		Single			
2.2 HDi 110 - 2.2 HDi 130	11->	CR098		Single			
2.2 HDi 120 - 3.0 HDi 160	06->	CR098		Single			
2.2 HDi 150 - 3.0 HDi 180	11->	CR098		Single			
2.5 D 4x4	00-02	CR077		Single			
2.5 D 4x4	00-02	CR097		Single			
2.5 DT 4x4	96-97	CR077		Single			
2.5 TD	94-02	CR077		Single			
2.5 TDI	96-00	CR077		Single			
2.5 TDI	96-00	CR097		Single			
2.5 TDI	96-00				CR127		Single
2.5 TDI 4x4	00-00	CR097		Single			
2.8 HDI	00->				CR127		Single
2.8 HDI - 2.8 HDI 4x4	00-02	CR077		Single			
2.8 HDI - 2.8 HDI 4x4	00->	CR097		Single			
2.8 HDI - 2.8 HDI 4x4	02->	CR077		Single			
3.0 HDi 145 - 3.0 HDi 155	10->	CR098		Single			

follow CITROEN

MODELLO MODEL	ANNO YEAR	ANT I FRONT INNER	ANT E FRONT OUTER	NOTE NOTES	POST I REAR INNER	POST E REAR OUTER	NOTE NOTES
JUMPER Pianale Piatto							
1.9 TD - 2.0 - 2.5 D - 2.5 TD	94-02	CR077		Single			
1.9 TD - 2.0 - 2.5 D - 2.5 TD	94-02	CR097		Single			
1.9 TD - 2.0 - 2.5 D - 2.5 TD	94-02				CR127		Single
2.0 HDI	02->	CR097		Single			
2.0 HDI	02->				CR127		Single
2.0 HDI - 2.2 HDI 16V	02->	CR077		Single			
2.2 HDI	02-06				CR127		Single
2.2 HDi - 2.8 Hdi 4x4	02-06	CR097		Single			
2.2 HDi 100 - 2.2 HDi 120 - 3.0 HDi 160	06->	CR098		Single			
2.2 HDi 110 - 2.2 HDi 130	11->	CR098		Single			
2.2 HDi 150 - 3.0 HDi 180	11->	CR098		Single			
2.5 D 4x4	00-02	CR077		Single			
2.5 D 4x4	00-02	CR097		Single			
2.5 TDI	96-02	CR077		Single			
2.5 TDI	96-02	CR097		Single			
2.5 TDI	96-02				CR127		Single
2.5 TDI 4x4	00-02	CR077		Single			
2.5 TDI 4x4	00-02	CR097		Single			
2.8 D	99-02	CR097		Single			
2.8 D	99-02				CR127		Single
2.8 HDI	00->	CR097		Single			
2.8 HDI	00->				CR127		Single
2.8 HDI	00->	CR077		Single			
2.8 HDI 4x4	02-06				CR127		Single
3.0 HDi 145	10->	CR098		Single			
JUMPY							
1,6 - 1,9 TD	95->	CR063		Single			
1,9 D	95-98	CR063		Single			
2.0 - 2.0 Hdi - 2.0 i 16V	00->	CR063		Single			
JUMPY Furgonato							
1,6 - 1,9 TD	95->	CR063		Single			
1,9 D	98->	CR063		Single			
2,0 Hdi	99->	CR063		Single			
2,0 i 16V	00->	CR063		Single			
JUMPY pianale piatto							
1,9 TD - 2,0 Hdi	99->	CR063		Single			

follow CITROEN

MODELLO MODEL	ANNO YEAR	ANT I FRONT INNER	ANT E FRONT OUTER	NOTE NOTES	POST I REAR INNER	POST E REAR OUTER	NOTE NOTES
LN							
Tutti i tipi/All types/Tous types	76-79				CR048		
LNA							
Tutti i tipi/All types/Tous types	79-80				CR048		
Tutti i tipi/All types/Tous types	80-86				CR048	CR028	
SAXO							
1.0-1.1 (NO ABS)	96-99		CR018		CR042		Single
1.1-1.4-1.6	96->		CR018		CR025		Single
1.5 D	96->		CR018		CR025		Single
1.6 16V ABS	96->		CR018				
1.6 i	96-99		CR018		CR025		Single
SAXO (S0,S1)							
1.0 X	98-03	CR095		Single			
1.0 X - 1.1 X, SX - 1.4 VTS	96->	CR062		Single			
1.1 X, SX - 1.4 VTS	96-03	CR095		Single			
1.5 D - 1.6	96-04	CR095		Single			
1.5 D - 1.6 VTL - 1.6 VTS	96->	CR062		Single			
1.6 VTL, VTR - 1.6 VTS	96-03	CR095		Single			
SAXO Hatchback							
1.0	97-03	CR095		Single			
1.5 D	99-03	CR095		Single			
VISA							
Tutti i tipi/All types/Tous types	78-80				CR048		
Tutti i tipi/All types/Tous types	80-84				CR048	CR028	
0.7-1.0-1.1-1.4	85-89				CR048	CR028	
1.6 GTI - 1.8 D	85-89		CR018		CR025		Single
XANTIA							
1.6-1.8-2.0	93->	CR040		Single			
1.9 D - 1.9 TD	94->	CR040		Single			

follow CITROEN

MODELLO MODEL	ANNO YEAR	ANT I FRONT INNER	ANT E FRONT OUTER	NOTE NOTES	POST I REAR INNER	POST E REAR OUTER	NOTE NOTES
XSARA							
1.4 - 1.6 - 1.8 - 2.0	97->				CR025		Single
1.5 D - 1.9 D - 1.9 TD	97->				CR025		Single
XSARA (N1)							
1.4 i	97	CR062		Single			
1.4 i - 1.9 D	97-05	CR095		Single			
1.5 D - 1.6 i	97-00	CR062		Single			
1.5 D - 1.6 i - 1.8 D - 1.8 i	97-00	CR095		Single			
1.6 16V	00-05	CR095		Single			
1.8 i 16V - 1.8 i Aut. - 1.9 TD	97-00	CR095		Single			
1.9 SD - 2.0 16V	98-00	CR095		Single			
XSARA BREAK (N2)							
1.4 i	97	CR062		Single			
1.4 i - 1.9 D	97-05	CR095		Single			
1.5 D - 1.6 i - 1.8 D - 1.8 i	97-00	CR095		Single			
1.5 D - 1.6 i	97-00	CR062		Single			
1.8 i 16V - 1.8 i Aut. - 1.9 TD	97-00	CR095		Single			
2.0 16V	98-00	CR095		Single			
XSARA Cassone							
1.4	98-04	CR095		Single			
1.9 D	98-00	CR095		Single			
XSARA COUPE'							
1.4 i	98	CR062		Single			
1.4 i - 1.9 D - 2.0 i 16V	98-05	CR095		Single			
1.6 16V	00-05	CR095		Single			
1.6 i	98-00	CR062		Single			
1.6 i - 1.8 i - 1.8 i 16V - 1.9 TD	98-00	CR095		Single			
ZX							
1.1-1.4-1.6 ABS	91->	CR040		Single	CR025		Single
1.1-1.4-1.6 S/ABS	91->	CR018			CR025		Single
1.8-1.9 Diesel	92->	CR040		Single	CR025		Single
1.8-2.0-2.0 16v	93->	CR040		Single	CR025		Single
1.9 Turbo Diesel	93->	CR040		Single	CR025		Single

DACIA							
MODELLO MODEL	ANNO YEAR	ANT I FRONT INNER	ANT E FRONT OUTER	NOTE NOTES	POST I REAR INNER	POST E REAR OUTER	NOTE NOTES
DUSTER							
1.2 TCe 125	13-18	CR120		Single			
1.2 TCe 125 4x4 - 1.6 SCe 115	15-18	CR120		Single			
1.5 dCi - 1.5 dCi 4x4	10-18	CR120		Single			
1.5 dCi - 1.6 16V	10->	CR082					Single
1.6 16V - 1.6 16V 4x4 - 1.6 16V Hi-Flex	10-18	CR120		Single			
1.6 16V LPG	11-18	CR120		Single			
1.6 SCe 115 4x4 - 1.6 SCe 115 LPG	15-18	CR120		Single			
DUSTER Cassone/SUV							
1.2 TCe 125 4x4	13->	CR120		Single			
1.5 dCi - 1.5 dCi 4x4	11->	CR120		Single			
1.6 16V 4x4 - 1.6 16V Hi-Flex	11->	CR120		Single			
1.6 SCe 115 - 1.6 SCe 115 4x4	15->	CR120		Single			
LOGAN							
1.4	04->	CR075		Single			
1.4 - 1.5 DCI	07->	CR082					Single
1.4 - 1.6	04->	CR076		Single			
1.5 DCI	05->	CR075		Single			
1.5 DCI	05->	CR076		Single			
1.6	04->	CR075		Single			
1.6 - 1.6 16V	07->	CR082					Single
1.6 16V	06->	CR075		Single			
1.6 16V	06->	CR076		Single			
LOGAN EXPRESS							
1.4 - 1.5 DCI - 1.6	09->	CR076		Single			
LOGAN MCV							
1.4 - 1.5 DCI - 1.6 - 1.6 16V	07->	CR075		Single			
1.4 - 1.5 DCI - 1.6 - 1.6 16V	07->	CR076		Single			
LOGAN Pick-up							
1.5 DCI - 1.6	08->	CR076		Single			
SANDERO							
1.2 16V - 1.4 - 1.5 DCI - 1.6	08->	CR076		Single			
1.5 DCI - 1.6	08->	CR038/R					Single

DAEWOO

MODELLO MODEL	ANNO YEAR	ANT I FRONT INNER	ANT E FRONT OUTER	NOTE NOTES	POST I REAR INNER	POST E REAR OUTER	NOTE NOTES
CIELO							
1500 MPI (ABS)	94-96		CR012		CR005	CR006	
1500 MPI (No ABS)	94-96	CR008		Single	CR005	CR006	
1800 MPI (ABS)	94-96		CR012		CR005	CR006	
1800 MPI (No ABS)	94-96	CR008		Single	CR005	CR006	
ESPERO							
1.5-1.6-2.0 (ABS)	92-96		CR012				
1.5-1.6-2.0 (No ABS)	92-96		CR012		CR005	CR006	
1.8 (No ABS)	94-96		CR012		CR005	CR006	
LEMANS							
Tutti i tipi/All types/Tous types	92-93	CR008		Single	CR005	CR006	
MATIZ							
0.8	98->	CR074	CR074				
1.0	03->	CR074	CR074				

DAF

MODELLO MODEL	ANNO YEAR	ANT I FRONT INNER	ANT E FRONT OUTER	NOTE NOTES	POST I REAR INNER	POST E REAR OUTER	NOTE NOTES
44							
Tutti i tipi/All types/Tous types	67-74	CR023	CR006				
55							
Tutti i tipi/All types/Tous types	68-72	CR023	CR006				
66							
Tutti i tipi/All types/Tous types	72-75	CR023	CR006				

DAIHATSU

MODELLO MODEL	ANNO YEAR	ANT I FRONT INNER	ANT E FRONT OUTER	NOTE NOTES	POST I REAR INNER	POST E REAR OUTER	NOTE NOTES
CARMANT							
1.3-1.5-1.6	78->	CR005	CR006				
1.6	82->	CR005	CR006				

follow DAIHATSU

MODELLO MODEL	ANNO YEAR	ANT I FRONT INNER	ANT E FRONT OUTER	NOTE NOTES	POST I REAR INNER	POST E REAR OUTER	NOTE NOTES
CHARADE III							
1.0 - 1.0 D - 1.0 GTI - 1.0 TD	87-92	CR079		Single			
1.0 Turbo	87-90	CR079		Single			
1.3	90-93	CR079		Single			
1.3 i	88-92	CR079		Single			
1.3 i 4WD	88-93	CR079		Single			
CHARADE IV							
1.3 16V - 1.6 GTI	93-99	CR079		Single			
DELTA							
1.3	79->		CR006				
GRAN MOVE							
1.5 16V	96-98	CR079		Single			
1.6 16V	98->	CR079		Single			
VIII							
1.33 16V	11->	CR123		Single			

DATSUN-NISSAN

MODELLO MODEL	ANNO YEAR	ANT I FRONT INNER	ANT E FRONT OUTER	NOTE NOTES	POST I REAR INNER	POST E REAR OUTER	NOTE NOTES
ATLAS CABSTAR							
F22	82-89	CR022	CR024				
BLUEBIRD							
160B-180B	->75		CR006				
160B-180B	75->	CR014	CR013				
CHERRY							
Tutti i tipi/All types/Tous types	79->				CR005	CR013	
LAUREL							
C30	72-81	CR014	CR013				

follow DATSUN-NISSAN

MODELLO MODEL	ANNO YEAR	ANT I FRONT INNER	ANT E FRONT OUTER	NOTE NOTES	POST I REAR INNER	POST E REAR OUTER	NOTE NOTES
SKYLINE							
160K-180K 160K-180K-240KGT	->75 75->	 CR014	CR006 CR013				
SUNNY							
Tutti i tipi/All types/Tous types 120Y	79->\ 75->	 CR014	CR006 CR013				
URVAN							
E21-E23-E24	82-87	CR022	CR024				
VIOLET							
140J-160J-510 140S-160S	77->\ 73-77	 CR014	CR006 CR013				

DE TOMASO

MODELLO MODEL	ANNO YEAR	ANT I FRONT INNER	ANT E FRONT OUTER	NOTE NOTES	POST I REAR INNER	POST E REAR OUTER	NOTE NOTES
DEAUVILLE							
Tutti i tipi/All types/Tous types		CR014	CR013				
LONGCHAMP							
Tutti i tipi/All types/Tous types		CR014	CR013				
PANTERA							
GTS-GT5-GT5 S		CR014	CR013				

FERRARI

MODELLO MODEL	ANNO YEAR	ANT I FRONT INNER	ANT E FRONT OUTER	NOTE NOTES	POST I REAR INNER	POST E REAR OUTER	NOTE NOTES
208							
GTB TURBO GTS TURBO		CR014 CR014	CR013 CR013				
328							
GTB-GTS		CR014	CR013				

FIAT							
MODELLO MODEL	**ANNO YEAR**	**ANT I FRONT INNER**	**ANT E FRONT OUTER**	**NOTE NOTES**	**POST I REAR INNER**	**POST E REAR OUTER**	**NOTE NOTES**
124							
Tutti i tipi/All types/Tous types Rally	67-74 81-83	CR020 CR014	CR013 CR013		CR003 CR003		Single Single
125							
Tutti i tipi/All types/Tous types Tutti i tipi/All types/Tous types	->77 81-83	CR014 CR014	CR013 CR013		CR003 CR003		Single Single
126							
Tutti i tipi/All types/Tous types 600	77-93 72-77	CR046 CR060	CR045 CR061		CR047	CR047	
127							
Tutti i tipi/All types/Tous types Fiorino	->77 ->78	CR001 CR001		Single Single			
128							
Tutti i tipi/All types/Tous types Tutti i tipi/All types/Tous types tutte le versioni	->76 76-79 79-84	CR001 CR001 CR002		Single Single Single			
131							
Tutti i tipi/All types/Tous types	75-84	CR010	CR013		CR003		Single
132							
Tutti i tipi/All types/Tous types	72-81	CR014	CR013		CR003		Single
238							
Tutti i tipi/All types/Tous types		CR022	CR022		CR022	CR024	

follow FIAT

MODELLO MODEL	ANNO YEAR	ANT I FRONT INNER	ANT E FRONT OUTER	NOTE NOTES	POST I REAR INNER	POST E REAR OUTER	NOTE NOTES
500							
0.5	65-75	CR060	CR061				
0.6	73-76	CR060	CR061				
1.2	07->	CR102	CR102				
1.2 LPG	10->	CR102		Single			
1.3 D Multijet - 1.4	07->	CR099		Single			
D	63-66				CR047	CR047	
F	67-76				CR047	CR047	
L	67-76				CR047	CR047	
500L							
0.9 - 1.3 D Multijet - 1.4	12->	CR101		Single			
0.9 Natural Power	13->	CR101		Single			
1.6 D Multijet	12-18	CR101		Single			
600							
D	64-70	CR046	CR045		CR047	CR047	
850							
Tutti i tipi/All types/Tous types	64-72	CR046	CR045				
ARGENTA							
Tutti i tipi/All types/Tous types	81-85	CR014	CR013		CR003		Single
BARCHETTA							
1.8 16V	95-05	CR099		Single			
1.8 i.e 16v	94->	CR016		Single			
BRAVA							
1.2 16V 80	98-02	CR103		Single			
1.4 - 1.6 16V - 1.9 D	95-01	CR103		Single			
1.4 12V	95-98	CR103		Single			
1.8 GT 16V	95-01	CR099		Single			
1.9 JTD	00-01	CR099		Single			
1.9 JTD 105	98-01	CR099		Single			
1.9 TD 100 S - 1.9 TD 75 S	96-01	CR099		Single			

follow FIAT

MODELLO MODEL	ANNO YEAR	ANT I FRONT INNER	ANT E FRONT OUTER	NOTE NOTES	POST I REAR INNER	POST E REAR OUTER	NOTE NOTES
BRAVO I							
1.2 16V 80	98-01	CR103		Single			
1.4 - 1.6 16V - 1.9 D	95-01	CR103		Single			
1.6	00-01	CR103		Single			
1.8 GT	95-01	CR099		Single			
1.9 JTD	00-01	CR099		Single			
1.9 JTD 105	98-01	CR099		Single			
1.9 TD 100 S - 1.9 TD 75 S	96-01	CR099		Single			
BRAVO II							
1.4 - 1.4 T-Jet - 1.6 D Multijet	07-14	CR101		Single			
1.4 16V	10-14	CR101		Single			
1.4 LPG	08-14	CR101		Single			
1.9 D Multijet	06-14	CR101		Single			
1.9 D Multijet	06-14	CR104		Single			
2.0 D Multijet	08-14	CR104		Single			
BRAVO/BRAVA							
1.4-1.6	95->	CR018		Single			
1.9 Diesel	95->	CR018		Single			
CINQUECENTO							
Tutti i tipi/All types/Tous types	92->	CR017		Single			
COUPE'							
2.0 i.e 16v	94->	CR016		Single			
CROMA							
1.6-2.0 CHT i.e	85->	CR016		Single			
2.0 i.e Autom.	85->	CR016		Single			
2.0 i.e Turbo	85->	CR016		Single			
Diesel-TD	85->	CR016		Single			
DOBLO Cargo							
1.3 D Multijet - 1.4	10->	CR101		Single			
1.4 Natural Power- 1.6 D Multijet	10->	CR104		Single			
1.6 D Multijet - 2.0 Multijet	10->	CR101		Single			
2.0 D Multijet	10->	CR104		Single			

follow FIAT

MODELLO MODEL	ANNO YEAR	ANT I FRONT INNER	ANT E FRONT OUTER	NOTE NOTES	POST I REAR INNER	POST E REAR OUTER	NOTE NOTES
DOBLO Cassone							
1.2	01-04	CR099		Single			
1.3 D Multijet	05-10	CR099		Single			
1.3 JTD 16V	04-06	CR099		Single			
1.4	05->	CR099		Single			
1.6 16V - 1.9 D - 1.9 JTD	01->	CR099		Single			
DOBLO Combi							
1.3 D Multijet - 1.4 - 1.6 D Multijet	10->	CR101		Single			
1.4 Natural Power- 1.6 D Multijet	10->	CR104		Single			
2.0 D Multijet	10->	CR104		Single			
DOBLO MPV							
1.2 - 1.6 16V - 1.9 D - 1.9 JTD	01->	CR099		Single			
1.3 D Multijet - 1.4 - 1.9 D Multijet	05->	CR099		Single			
DOBLO Pianale piatto							
1.3 D Multijet - 1.4 - 1.4 Natural Power	10->	CR101		Single			
1.4 Natural Power- 1.6 D Multijet	10->	CR104		Single			
1.6 D Multijet - 2.0 D Multijet	10->	CR101		Single			
2.0 D Multijet	10->	CR104		Single			
DUCATO							
I 10	82-92	CR051	CR051		CR049	CR050	
I 13	82-93	CR051	CR051		CR049	CR050	
I 14	86-93	CR051	CR051		CR049	CR050	
I 18	86-93	CR051	CR051				
II 10 (4x2) - 14 (4x2)	94-99	CR051	CR051		CR049	CR050	
II 10 (4x4) - 14 (4x4)	96-99	CR051	CR051		CR051	CR051	
II 18 (4x4)	96-99				CR049	CR050	

follow FIAT

MODELLO MODEL	ANNO YEAR	ANT I FRONT INNER	ANT E FRONT OUTER	NOTE NOTES	POST I REAR INNER	POST E REAR OUTER	NOTE NOTES
DUCATO Autobus							
1.9 D - 1.9 TD - 2.8 D	98-02	CR097		Single			
1.9 D - 1.9 TD - 2.8 D	98-02				CR127		Single
1.9 D Combinato	95-02	CR097		Single			
1.9 D Combinato	95-02				CR127		Single
1.9 TD Combinato - 1.9 TD Panorama	94-02	CR097		Single			
1.9 TD Combinato - 1.9 TD Panorama	94-02				CR127		Single
100 Multijet 2.2 D	06-11	CR098		Single			
110 Multijet 2.3 D - 115 Multijet 2.3 D	11->	CR098		Single			
120 Multijet 2.3 D - 160 Multijet 3.0 D	06->	CR098		Single			
130 Multijet 2.3 D - 150 Multijet 2.3 D	11->	CR098		Single			
140 Natural Power	09->	CR098		Single			
150 Multijet 3.0 D	10->	CR098		Single			
180 Multijet 3.0 D	11->	CR098		Single			
2.0 - 2.0 Bipower - 2.0 JTD	02->	CR077		Single			
2.0 - 2.0 Bipower - 2.3 JTD	02->				CR127		Single
2.0 - 2.0 Bipower - 2.3 JTD	02->	CR097		Single			
2.0 4x4	94-06	CR097		Single			
2.0 JTD	01->	CR097		Single			
2.0 JTD	01->				CR127		Single
2.0 Panorama - 2.5 D Combinato	94-02	CR097		Single			
2.0 Panorama - 2.5 D Combinato	94-02				CR127		Single
2.3 JTD - 2.8 JTD	02->	CR077		Single			
2.5 TDI 4x4 - 2.8 TDI	97-02	CR097		Single			
2.5 TDI Panorama	94-02	CR097		Single			
2.5 TDI Panorama	94-02				CR127		Single
2.8 JTD	00-06	CR097		Single			
2.8 JTD	00-06				CR127		Single
2.8 JTD 4x4	02->	CR077		Single			
2.8 JTD 4x4	00->	CR097		Single			
2.8 TD	03-06				CR127		Single
2.8 TDI	97-02				CR127		Single
2.8 TDI 4x4	99-02	CR097		Single			

follow FIAT

MODELLO MODEL	ANNO YEAR	ANT I FRONT INNER	ANT E FRONT OUTER	NOTE NOTES	POST I REAR INNER	POST E REAR OUTER	NOTE NOTES
DUCATO Furgonato							
1.9 D - 1.9 TD - 2.8 D	98-02	CR097		Single			
1.9 D - 1.9 TD - 2.8 D	98-02				CR127		Single
1.9 TD CAT - 2.5 D - 2.5 TDI	94-02				CR127		Single
1.9 TD CAT - 2.5 TDI 4x4	98-02	CR097		Single			
100 Multijet 2.2 D	06->	CR098		Single			
110 Multijet 2.3 D - 115 Multijet 2.3 D	11->	CR098		Single			
120 Multijet 2.3 D - 160 Multijet 3.0 D	06->	CR098		Single			
120 Multijet 2.3 d 4x4	10->	CR098		Single			
130 Multijet 2.3 D - 150 Multijet 2.3 D	11->	CR098		Single			
140 Natural Power	09->	CR098		Single			
150 Multijet 3.0 D	10->	CR098		Single			
180 Multijet 3.0 D	11->	CR098		Single			
2.0	98->	CR097		Single			
2.0	94->				CR127		Single
2.0 - 2.0 Bipower - 2.0 JTD	02->	CR077		Single			
2.0 4x4	98-06	CR097		Single			
2.0 Bipower - 2.3 JTD	02->	CR097		Single			
2.0 Bipower - 2.3 JTD	02->				CR127		Single
2.0 JTD	01->	CR097		Single			
2.0 JTD	01->				CR127		Single
2.3 JTD - 2.8 JTD	02->	CR077		Single			
2.5 D - 2.5 TDI	94-02	CR097		Single			
2.8 D - 2.8 D 4x4	98-02	CR097		Single			
2.8 JTD	00->				CR127		Single
2.8 JTD - 2.8 JTD 4x4	00->	CR097		Single			
2.8 JTD 4x4 - 2.8 JTD Power	02->	CR077		Single			
2.8 JTD Power	04->	CR097		Single			
2.8 JTD Power	04->				CR127		Single
2.8 TDI	97-02	CR097		Single			
2.8 TDI	97-02				CR127		Single
2.8 TDI 4x4	99-02	CR097		Single			

follow FIAT

MODELLO MODEL	ANNO YEAR	ANT I FRONT INNER	ANT E FRONT OUTER	NOTE NOTES	POST I REAR INNER	POST E REAR OUTER	NOTE NOTES
DUCATO Pianale Piatto							
1.9 D - 1.9 TD - 1.9 TD CAT	94-02	CR097		Single			
1.9 D - 1.9 TD - 1.9 TD CAT	94-02				CR127		Single
100 Multijet 2.2 D	06->	CR098		Single			
110 Multijet 2.3 D - 115 Multijet 2.3 D	11->	CR098		Single			
120 Multijet 2.3 D - 160 Multijet 3.0 D	06->	CR098		Single			
120 Multijet 2.3 d 4x4	10->	CR098		Single			
130 Multijet 2.3 D - 150 Multijet 2.3 D	11->	CR098		Single			
140 Natural Power	09->	CR098		Single			
150 Multijet 3.0 D	10->	CR098		Single			
180 Multijet 3.0 D	11->	CR098		Single			
2.0	94-06	CR097		Single			
2.0	94-06				CR127		Single
2.0 JTD	01-06				CR127		Single
2.0 JTD - 2.3 JTD - 2.8 JTD	02->	CR077		Single			
2.0 JTD - 2.8 JTD 4x4	01-06	CR097		Single			
2.3 JTD	02-06	CR097		Single			
2.3 JTD	02-06				CR127		Single
2.5 D - 2.5 D 4x4 - 2.5 TDI	94-02	CR097		Single			
2.5 D - 2.5 TDI	94-02				CR127		Single
2.5 TDI 4x4 - 2.8 D - 2.8 TDI	98-02	CR097		Single			
2.8 JTD	00-06	CR097		Single			
2.8 JTD	00-06				CR127		Single
2.8 JTD Power	04->	CR077		Single			
2.8 JTD Power	04-06	CR097		Single			
2.8 JTD Power	04-06				CR127		Single
2-8 D - 2.8 TDI	98-02				CR127		Single
DUNA							
60-70-Weekend	87->	CR002		Single			
Diesel Weekend	87->	CR002		Single			
FIORINO							
1.0-1.1-1.3-1.5	79-88	CR002		Single			
1.1-1.3-1.5	88-93	CR002		Single			
1.1-1.3-1.5	93->	CR016		Single			
1.3-1.7 Diesel	93->	CR016		Single			
1.3-1.7 Diesel	88-93	CR002		Single			
1.3-1.7 Diesel	87-88	CR002		Single			
900-1.0	78-79	CR001		Single			
furgonato	88->	CR002		Single			

follow FIAT							
MODELLO MODEL	ANNO YEAR	ANT I FRONT INNER	ANT E FRONT OUTER	NOTE NOTES	POST I REAR INNER	POST E REAR OUTER	NOTE NOTES
FIORINO Cassone							
1.3 D Multijet	07->	CR099		Single			
LINEA							
1.3 D Multijet	07->	CR099		Single			
MAREA							
1.2 16V	98-02	CR103		Single			
1.4 12v	96->	CR018		Single			
1.4 80 12V	96-02	CR103		Single			
1.6 100 16V - 1.8 115 16V	96-02	CR099		Single			
1.6-1.8	96->	CR016		Single			
1.9 JTD 105	98-02	CR099		Single			
1.9 JTD 110	00-02	CR099		Single			
1.9 TD 75 - 1.9 TD 100	96-02	CR099		Single			
1.9 Turbo D.	96->	CR016		Single			
MAREA Weekend							
1.2 16V	98-02	CR103		Single			
1.4 80 12V	96-02	CR103		Single			
1.6 100 16V - 1.8 115 16V	96-02	CR099		Single			
1.9 JTD 105	98-02	CR099		Single			
1.9 JTD 110	00-02	CR099		Single			
1.9 TD 75 - 1.9 TD 100	96-02	CR099		Single			
MULTIPLA							
(Non ABS)	98-99	CR016		Single			
1.6	00-10	CR099		Single			
1.6 100 16V - 1.6 16V Bipower	99-10	CR099		Single			
1.6 16V Blupower - 1.9 JTD 105	99-10	CR099		Single			
1.9 JTD - 1.9 JTD 115	02-10	CR099		Single			
1.9 JTD 110	01-02	CR099		Single			
PALIO							
1.0 - 1.2 - 1.4 - 1.4 Cat. -1.5- 1.6 16V	96->	CR002		Single			
1.8 SOUTH AMERICA		CR072		Single			
EUROPA	97-00	CR002		Single			

follow FIAT							
MODELLO MODEL	ANNO YEAR	ANT I FRONT INNER	ANT E FRONT OUTER	NOTE NOTES	POST I REAR INNER	POST E REAR OUTER	NOTE NOTES
PALIO WEEKEND							
1.2 - 1.6 16V - 1.7 TD	96-01	CR002		Single			
1.9 JTD	01->	CR099		Single			
PANDA							
0.9 - 0.9 4x4 - 0.9 Natural Power	12->	CR102		Single			
1.2 - 1.2 LPG - 1.3 D Multijet 4x4	12->	CR102		Single			
PANDA Cassone							
1.1 - 1.2 - 1.2 4x4 - 1.3 D Multijet 4x4	04->	CR102		Single			
1.2 Bipower	04-11	CR102		Single			
1.2 LPG	09->	CR102		Single			
PANDA VAN							
0.9 - 0.9 4x4 - 0.9 Natural Power	12->	CR102		Single			
1.2 - 1.2 LPG	12->	CR102		Single			
1.3 D Multijet - 1.3 D Multijet 4x4	12->	CR102		Single			
PANDA/PANDA CLASSIC							
1.1 - 1.2	03->	CR102		Single			
1.2 4x4	04->	CR099		Single			
1.2 4x4 - 1.3 D Multijet 4x4	04->	CR102		Single			
1.2 LPG	09->	CR102		Single			
1.2 Natural Power	07-11	CR099		Single			
1.3 D Multijet	03-13	CR099		Single			
1.3 D Multijet 4x4	04-13	CR099		Single			
1.3 JTD Multijet 4x4	10-13	CR102		Single			
1.4	06->	CR099		Single			
1.4 Natural Power	10-13	CR099		Single			

follow FIAT

MODELLO MODEL	ANNO YEAR	ANT I FRONT INNER	ANT E FRONT OUTER	NOTE NOTES	POST I REAR INNER	POST E REAR OUTER	NOTE NOTES
PUNTO							
1.1	93->	CR017		Single			
1.2 16V	97-99	CR103		Single			
1.2 16V 80	99-06	CR103		Single			
1.2 60	99-10	CR103		Single			
1.2 Natural Power - 1.3 JTD 16V	03-12	CR099		Single			
1.2 Natural Power - 1.4	03-12	CR103		Single			
1.2-1.6	93->	CR018		Single			
1.2-1.6 Cabrio	93->	CR018		Single			
1.6 - 1.7 D	94-97	CR103		Single			
1.7 TD	96-99	CR103		Single			
1.7-1.4 GT-1.8 TD	93->	CR016		Single			
1.8 130 HGT - 1.9 JTD 80	99-12	CR099		Single			
1.9 DS 60	99-12	CR103		Single			
1.9 JTD	01-12	CR099		Single			
60 1.2 - 75 1.2	93-99	CR103		Single			
PUNTO Cabriolet							
60 1.2	94-00	CR103		Single			
85 16V 1.2	97-00	CR103		Single			
90 1.6	94-97	CR103		Single			
PUNTO Cassone							
1.2 60 - 1.9 D 60	00-09	CR103		Single			
1.2 60 - 1.9 D 60 - 1.9 JTD	00-09	CR099		Single			
1.3 JTD	03-05	CR099		Single			
PUNTO Van							
1.7 D	96-00	CR099		Single			
REGATA							
1.3-1.5	86-87	CR002		Single			
75-85-100	83-85	CR002		Single			
Diesel	83-85	CR002		Single			
Weekend	83-85	CR002		Single			
Weekend	86-87	CR002		Single			

follow FIAT

MODELLO MODEL	ANNO YEAR	ANT I FRONT INNER	ANT E FRONT OUTER	NOTE NOTES	POST I REAR INNER	POST E REAR OUTER	NOTE NOTES
RITMO							
105 TC	81-82	CR002		Single			
125-130 TC	82-87	CR016		Single			
60-65-75	78-82	CR002		Single			
60-70-85-100	85-87	CR002		Single			
Cabriolet 100 1.6	85-87	CR002		Single			
Cabriolet 50 1.3	85-87	CR002		Single			
Cabriolet 85 1.5	80-89	CR002		Single			
Diesel	80-87	CR002		Single			
ES-60-70-85-105 TC	83-84	CR002		Single			
Super 75-85	81-82	CR002		Single			
Turbo Diesel	86-87	CR002		Single			
RITMO I							
55 diesel 1.7	79-82	CR002		Single			
60 1.0	78-82	CR002		Single			
65-70-75 1.3	78-85	CR002		Single			
75 1.5 / 1.5 i.e	78-87	CR002		Single			
85 1.5	81-82	CR002		Single			
90 i.e 1.6	85-87	CR002		Single			
SCUDO combinato							
1.6 - 1.9 TD - 1.9 TD Eco	96->	CR063		Single			
1.9 D	96-98	CR063		Single			
2.0 16V	00->	CR063		Single			
2.0 JTD	99->	CR063		Single			
SCUDO furgonato							
1,6 - 1,9 D - 1,9 TD	96->	CR063		Single			
2,0 JTD	99->	CR063		Single			
SEICENTO / 600							
0.9	97-08	CR102		Single			
1.1	98-10	CR102		Single			
Elettra	98-05	CR102		Single			
SEICENTO / 600 Cassone							
1.1	98-10	CR102		Single			

follow FIAT							
MODELLO MODEL	ANNO YEAR	ANT I FRONT INNER	ANT E FRONT OUTER	NOTE NOTES	POST I REAR INNER	POST E REAR OUTER	NOTE NOTES
SIENA							
EUROPA	97-00	CR002		Single			
STILO							
1.2 16V	02-06	CR101		Single			
1.4 16V	03-06	CR101		Single			
1.6 16V - 1.9 JTD	01-06	CR101		Single			
1.8 16V	01-07	CR101		Single			
1.9 D Multijet	05-06	CR104		Single			
1.9 JTD	03-06	CR104		Single			
2.4 20V	01-07	CR104		Single			
STILO Multiwagon							
1.4 16V	04-08	CR101		Single			
1.6 16V - 1.8 16V - 1.9 JTD	03-08	CR101		Single			
1.9 D Multijet	05-08	CR101		Single			
1.9 D Multijet	05-08	CR104		Single			
1.9 JTD	03-08	CR104		Single			
STILO VAN							
1.9 JTD	01-08	CR104		Single			
STRADA Pick-up							
1.3 D Multijet	10->	CR099		Single			
TALENTO							
Tutti i tipi/All types/Tous types	91-94					CR050	
TEMPRA							
1.4-1.6	89->	CR018		Single			
1.8-2.0 i.e	89->	CR016		Single			
Diesel	89->	CR018		Single			
SW 1.4-1.6	89->	CR018		Single			
SW 1.8-2.0 i.e	89->	CR016		Single			
SW TD	89->	CR016		Single			
SW TD	89->	CR018		Single			
Turbo Diesel	89->	CR016		Single			

follow FIAT

MODELLO MODEL	ANNO YEAR	ANT I FRONT INNER	ANT E FRONT OUTER	NOTE NOTES	POST I REAR INNER	POST E REAR OUTER	NOTE NOTES
TIPO							
1.1-1.4	88->	CR017		Single			
1.6-2.0 16v i.e	89->	CR016		Single			
1.6-Diesel	88->	CR018		Single			
Turbo Diesel	88->	CR016		Single			
TIPO 2 volumi							
1.3 D - 1.4 - 1.4 LPG - 1.6 - 1.6 D	16->	CR101		Single			
TIPO Station wagon							
1.3 D - 1.4 - 1.4 LPG - 1.6 - 1.6 D	16->	CR101		Single			
TIPO Tre volumi							
1.3 D - 1.4 - 1.6 - 1.6 D	15->	CR101		Single			
1.4 LPG	16->	CR101		Single			
ULYSSE (220)							
1.8	97-02	CR063		Single			
1.9 TD	95-02	CR063		Single			
2.0 - 2.0 Turbo	94-02	CR063		Single			
2.0 16V	98-02	CR063		Single			
2.0 JTD	99-02	CR063		Single			
2.1 TD	96-99	CR063		Single			
UNO							
1.1-1.3-1.5 SX	88->	CR001		Single			
1.9 D	89-94	CR002		Single			
1370 i.e Turbo	88-92	CR002		Single			
45 Fire	86->	CR001		Single			
45-55-60	83->	CR001		Single			
50 1.1 / 1.1 i.e	86-93	CR002		Single			
55 / 60 1.1	83-92	CR002		Single			
900-1.0-1.1	89->	CR001		Single			
Diesel-70SX	84->	CR001		Single			
Turbo Diesel-CS	86->	CR002		Single			
Turbo i.e	85->	CR002		Single			

follow FIAT							
MODELLO MODEL	**ANNO YEAR**	**ANT I FRONT INNER**	**ANT E FRONT OUTER**	**NOTE NOTES**	**POST I REAR INNER**	**POST E REAR OUTER**	**NOTE NOTES**
X 1/9							
1.3 1.5 Five speed	->79 85->	CR001 CR002		Single Single	CR001		Single
FORD							
MODELLO MODEL	**ANNO YEAR**	**ANT I FRONT INNER**	**ANT E FRONT OUTER**	**NOTE NOTES**	**POST I REAR INNER**	**POST E REAR OUTER**	**NOTE NOTES**
12M							
Tutti i tipi/All types/Tous types	62-70				CR023	CR006	
15M							
Tutti i tipi/All types/Tous types	66-70				CR023	CR006	
17M							
Tutti i tipi/All types/Tous types	61-72	CR023	CR006				
20M							
Tutti i tipi/All types/Tous types	61-72	CR023	CR006				
26M							
Tutti i tipi/All types/Tous types	61-72	CR023	CR006				
CAPRI							
Tutti i tipi/All types/Tous types Tutti i tipi/All types/Tous types 3.0	68-74 74->\ 77->	 CR005	CR013 CR013 CR006				
CONSUL							
Tutti i tipi/All types/Tous types	72->	CR005	CR006				
CORCEL							
Tutti i tipi/All types/Tous types GT			CR057 CR057				LM78349/10 LM78349/10

follow FORD

MODELLO MODEL	ANNO YEAR	ANT I FRONT INNER	ANT E FRONT OUTER	NOTE NOTES	POST I REAR INNER	POST E REAR OUTER	NOTE NOTES
CORTINA							
1.3-1.6	70-82	CR023	CR006				
1.3-1.6 BREAKS	70-82	CR023	CR006				
2.0-2.3	70-82	CR023	CR006				
COURIER							
1.3	96-03	CR089		Single			
1.8 D	96-02	CR089		Single			
COURIER Furgonato							
1.8 DI	00-03	CR089		Single			
D 1.8	98-02	CR089		Single			
ESCORT							
Tutti i tipi/All types/Tous types	->68	CR023	CR006				
Tutti i tipi/All types/Tous types	68->	CR023	CR006				
1.1-1.3-1.4-1.6	91->	CR012		Single	CR043	CR043	
1.1-1.3-1.6	75-80	CR023	CR006				
1.1-1.3-1.6	80->	CR011	CR011		CR005/CR014	CR006/CR013	
1.8-2.0-1.8 Diesel	90->	CR012		Single	CR043	CR043	
RS 2000	76-80		CR013				
SW	80->	CR011	CR011		CR005/CR014	CR006/CR013	
FESTIVA							
SOUTH AMERICA		CR072		Single			
FIESTA							
Tutti i tipi/All types/Tous types	89-99	CR012		Single	CR043	CR043	
1.0-1.1	77-80				CR023	CR006	
900-1.0-1.1-1.3-1.6	80->	CR011	CR011		CR023	CR006	
XR2	80->	CR011	CR011		CR023	CR006	
FIESTA IV							
1.0 i	99-02	CR089		Single			
1.25 i 16V - 1.3 i	95-02	CR089		Single			
1.4 i 16V	96-02	CR089		Single			
1.6 16V Sport - 1.8 DI	00-02	CR089		Single			

follow FORD

MODELLO MODEL	ANNO YEAR	ANT I FRONT INNER	ANT E FRONT OUTER	NOTE NOTES	POST I REAR INNER	POST E REAR OUTER	NOTE NOTES
FIESTA V							
1.25 16V	02-08	CR089		Single			
1.25 16V	02-08	CR107		Single			
1.3 - 1.4 16V - 1.4 TDCi - 1.6 16V	01-08	CR089		Single			
1.3 - 1.4 16V - 1.4 TDCi - 1.6 16V	01-08	CR107		Single			
1.6 TDCi	04-08	CR089		Single			
1.6 TDCi	04-08	CR107		Single			
ST 150	05-08	CR089		Single			
ST 150	05-08	CR107		Single			
FIESTA V Van							
1.3	03-08	CR089		Single			
1.3	03-08	CR107		Single			
1.4	02-05	CR089		Single			
1.4 TDCi	03-10	CR089		Single			
1.4 TDCi	03-10	CR107		Single			
FIESTA VI							
1.6 ST	13->	CR089		Single			
1.6 ST200	16->	CR089		Single			
FIESTA VII							
1.0 EcoBoost - 1.1	17->	CR089		Single			
1.5 TDCi	17->	CR089		Single			
FOCUS							
Tutti i tipi/All types/Tous types					CR055		Single
1.4 16V - 1.6 16V - 1.8 16V	98-04	CR089		Single			
1.4 16V - 1.6 16V - 1.8 16V	98-04	CR107		Single			
1.8 DI / TDDi	99-04	CR089		Single			
1.8 DI / TDDi	99-04	CR107		Single			
1.8 TDCi	01-04	CR089		Single			
1.8 TDCi	01-04	CR107		Single			
1.8 Turbo DI / TDDi - 2.0 16V	98-04	CR089		Single			
1.8 Turbo DI / TDDi - 2.0 16V	98-04	CR107		Single			
RS - ST170	02-04	CR089		Single			
RS - ST170	02-04	CR107		Single			

follow FORD

MODELLO MODEL	ANNO YEAR	ANT I FRONT INNER	ANT E FRONT OUTER	NOTE NOTES	POST I REAR INNER	POST E REAR OUTER	NOTE NOTES
FOCUS Cassone							
1.4 - 1.6 - 1.8	99-05	CR089		Single			
1.8 TDCi	01-05	CR089		Single			
1.8 TDDi	98-05	CR089		Single			
FOCUS Tre volumi							
1.4 16V - 1.6 16V - 1.8 16V	99-04	CR089		Single			
1.4 16V - 1.6 16V - 1.8 16V	99-04	CR107		Single			
1.8 TDCi	01-04	CR089		Single			
1.8 TDCi	01-04	CR107		Single			
1.8 Turbo DI / TDDi	99-05	CR089		Single			
1.8 Turbo DI / TDDi	99-05	CR107		Single			
2.0 16V	99-04	CR089		Single			
2.0 16V	99-04	CR107		Single			
FOCUS Turnier							
1.4 16V - 1.6 16V- 1.8 16V	99-04	CR089		Single			
1.4 16V - 1.6 16V- 1.8 16V	99-04	CR107		Single			
1.8 DI / TDDi	99-04	CR089		Single			
1.8 DI / TDDi	99-04	CR107		Single			
1.8 TDCi	01-04	CR089		Single			
1.8 TDCi	01-04	CR107		Single			
1.8 Turbo DI / TDDi - 2.0 16V	99-04	CR089		Single			
1.8 Turbo DI / TDDi - 2.0 16V	99-04	CR107		Single			
ST170	02-04	CR089		Single			
ST170	02-04	CR107		Single			
FUSION							
1.25 - 1.6 TDCi	04-12	CR089		Single			
1.25 - 1.6 TDCi	04-12	CR107		Single			
1.4 - 1.4 TDCi	02-12	CR089		Single			
1.4 - 1.4 TDCi	02-12	CR107		Single			
1.4 LPG	10-12	CR089		Single			
1.4 LPG	10-12	CR107		Single			
1.6	02-08	CR089		Single			
1.6	02-08	CR107		Single			

follow FORD							
MODELLO MODEL	**ANNO YEAR**	**ANT I FRONT INNER**	**ANT E FRONT OUTER**	**NOTE NOTES**	**POST I REAR INNER**	**POST E REAR OUTER**	**NOTE NOTES**
GALAXY I							
1.9 TDI	95-07				CR125		Single
2.0 i	95-06				CR125		Single
2.3 16V	97-06				CR125		Single
2.8 i V6	95-00				CR125		Single
2.8 V6	00-06				CR125		Single
GRANADA							
BEZ-DIESEL	72-85	CR005	CR006				
KA							
Tutti i tipi/All types/Tous types	96-99	CR012		Single	CR043	CR043	
1.2	08-16	CR102	CR102	Signle			
1.3 TDCi	08-16	CR099		Single			
KA+							
1.2 - 1.2 Ti-VCT	16->	CR089		Single			
KOMBI							
Tutti i tipi/All types/Tous types	70->		CR006				
ORION							
1.3-1.4-1.6	91-93	CR012		Single	CR043	CR043	
1.3-1.6	83->	CR011	CR011		CR005	CR006	
1.8-2.0 16v-1.8 D.	90-93	CR012		Single	CR043	CR043	
P100							
Tutti i tipi/All types/Tous types	82-87	CR005	CR006				
P4							
Tutti i tipi/All types/Tous types	66->					CR006	
P6							
Tutti i tipi/All types/Tous types	66->					CR006	

follow FORD							
MODELLO MODEL	**ANNO YEAR**	**ANT I FRONT INNER**	**ANT E FRONT OUTER**	**NOTE NOTES**	**POST I REAR INNER**	**POST E REAR OUTER**	**NOTE NOTES**
P7							
15M-17M-20M	66->		CR006				
PUMA							
Tutti i tipi/All types/Tous types	97-99				CR043	CR043	
SIERRA							
1.3-1.6-1.8-2.0-2.3	83->	CR011	CR011		CR011	CR011	
TAUNUS							
1.3-1.6 BREAKS 1.3-1.6-2.0-2.3	70->
70->	CR023 CR023	CR006 CR006				
TOURNEO CONNECT							
1.8 16V - 1.8 TDCi - 1.8 TDCi /TDDi /DI	02-13	CR108		Single			
TRANSIT							
Tutti i tipi/All types/Tous types Tutti i tipi/All types/Tous types	65->
92->	CR014	CR013 CR013				
TRANSIT Autobus							
2.0 - 2.5 DI - 2.5 TD 2.0 CNG 2.0 i - 2.9 i	91-00 94-00 91-94				CR109 CR109 CR109		Single Single Single
TRANSIT CONNECT							
1.8 16V -1.8 Di - 1.8 TDCi	02-13	CR108		Single			
TRANSIT Furgonato							
2.0 - 2.5 DI - 2.5 TD 2.0 i 2.0 TDI	91-00 91-94 94-00				CR109 CR109 CR109		Single Single Single
TRANSIT Pianale piatto							
2.0 - 2.5 DI - 2.5 TD	91-00				CR109		Single

follow FORD

MODELLO MODEL	ANNO YEAR	ANT I FRONT INNER	ANT E FRONT OUTER	NOTE NOTES	POST I REAR INNER	POST E REAR OUTER	NOTE NOTES
TRANSIT TOURNEO Autobus							
2.0 - 2.4 D - 2.5 DI - 2.5 TD	94-00				CR109		Single

GENERAL MOTORS

MODELLO MODEL	ANNO YEAR	ANT I FRONT INNER	ANT E FRONT OUTER	NOTE NOTES	POST I REAR INNER	POST E REAR OUTER	NOTE NOTES
MONZA							
SOUTH AMERICA		CR072		Single			

HONDA

MODELLO MODEL	ANNO YEAR	ANT I FRONT INNER	ANT E FRONT OUTER	NOTE NOTES	POST I REAR INNER	POST E REAR OUTER	NOTE NOTES
PRELUDE							
Tutti i tipi/All types/Tous types	86->				CR013	CR005	
QUINTET							
Tutti i tipi/All types/Tous types	81-83				CR013	CR005	

HYUNDAI

MODELLO MODEL	ANNO YEAR	ANT I FRONT INNER	ANT E FRONT OUTER	NOTE NOTES	POST I REAR INNER	POST E REAR OUTER	NOTE NOTES
ACCENT							
1.3	94-00	CR067		Single			
1.3 - 1.5	00->	CR067		Single			
1.4 GL - 1.5 CRDi GLS - 1.6 GLS	05->	CR067		Single			
1.5 CRDi - 1.6	02->	CR067		Single			
ACCENT Tre volumi							
1.3	00->	CR067		Single			
1.4 GL - 1.5 CRDi GLS	05->	CR067		Single			
1.5 CRDi - 1.6	02->	CR067		Single			
1.6 GLS	05->	CR067		Single			
ATOS							
1.0 i	98-02	CR067		Single			

follow HYUNDAI							
MODELLO MODEL	ANNO YEAR	ANT I FRONT INNER	ANT E FRONT OUTER	NOTE NOTES	POST I REAR INNER	POST E REAR OUTER	NOTE NOTES
ATOS PRIME							
1.0 i	99->	CR067		Single			
COUPE							
1.6 16V	02->	CR070		Single			
2.0 16V	01-02	CR070		Single			
ELANTRA							
1.6 - 1.8 - 2.0	00->	CR070		Single			
ELANTRA Tre volumi							
1.6 - 1.8 - 2.0	00->	CR070		Single			
2.0 CRDi	01->	CR070		Single			
GETZ							
1.1 - 1.3	02->	CR067		Single			
1.4	05->	CR067		Single			
1.5 CRDi	03->	CR067		Single			
1.6	02->	CR067		Single			
i30							
1.4 - 1.6 - 1.6 CRDI	07->	CR087		Single			
1.4 CRDI	11->	CR087		Single			
1.6 CDI	11->	CR087		Single			
2.0 - 2.0 CRDI	07-11	CR087		Single			
i30 CW							
1.4	07->	CR087		Single			
1.4 CRDI	12->	CR087		Single			
1.6 - 1.6 CRDI	08->	CR087		Single			
1.6 GDI	12->	CR087		Single			
2.0 - 2.0 CRDI	08-12	CR087		Single			
ix20							
1.4 - 1.4 CRDI - 1.6	10->	CR087		Single			
1.6 CRDI	11->	CR087		Single			

follow HYUNDAI

MODELLO MODEL	ANNO YEAR	ANT I FRONT INNER	ANT E FRONT OUTER	NOTE NOTES	POST I REAR INNER	POST E REAR OUTER	NOTE NOTES
ix35							
2.0 4WD - 2.0 CRDi 4WD	15->				CR110		Single
2.0 Gdi 4WD	13-15				CR110		Single
2.4 DCVVT-I 4WD	10-15				CR110		Single
LANTRA I							
1.5 12V	96-00	CR067		Single			
1.6 16V - 1.6 i - 1.8 16V	95-00	CR067		Single			
1.9 D	98-00	CR067		Single			
2.0 16V	96-00	CR067		Single			
LANTRA II							
1.5 12V	97->	CR067		Single			
1.6 16V - 1.6 i - 1.8 16V	96->	CR067		Single			
1.9 D	98->	CR067		Single			
2.0 16V	96->	CR067		Single			
MATRIX							
1.5 CRDi	01->	CR070		Single			
1.5 CRDi VGT	05->	CR070		Single			
1.6 - 1.8	01->	CR070		Single			
PONY1-2							
1.4-1.5	82-88	CR006	CR023				
SANTA FE I							
2.0 - 2.0 CRDi 4x4	01-06				CR110		Single
2.4 16V 4x4 - 2.7 V6 4x4	01-06				CR110		Single
STELLAR							
1.8-2.0	90->	CR006	CR023				
KSC-MIP	86-87	CR006	CR023				

follow HYUNDAI

MODELLO MODEL	ANNO YEAR	ANT I FRONT INNER	ANT E FRONT OUTER	NOTE NOTES	POST I REAR INNER	POST E REAR OUTER	NOTE NOTES
TUCSON							
1.6 T-Gdi Trazione integrale	15->				CR110		Single
2.0 CRDi Trazione integrale	04-10				CR110		Single
2.0 CRDi Trazione integrale	15->				CR110		Single
2.0 Trazione integrale	04-10				CR110		Single
2.7 Trazione integrale	04-10				CR110		Single
VELOSTER							
1.6 GDI	11->	CR087		Single			
1.6 T-GDI	12->	CR087		Single			

IRISBUS

MODELLO MODEL	ANNO YEAR	ANT I FRONT INNER	ANT E FRONT OUTER	NOTE NOTES	POST I REAR INNER	POST E REAR OUTER	NOTE NOTES
DAILY TOURYS							
16, 19	06->	CR098		Single			

IVECO

MODELLO MODEL	ANNO YEAR	ANT I FRONT INNER	ANT E FRONT OUTER	NOTE NOTES	POST I REAR INNER	POST E REAR OUTER	NOTE NOTES
238							
Tutti i tipi/All types/Tous types		CR022	CR022				
DAILY CITYS Autobus							
50C15 - 50C17	14-16	CR105		Single			
50C15 - 50C17	14-16	CR106		Single			
DAILY II Autobus							
A 40-10 - A40-12 - A 45-10 - A45-12	96-99	CR105		Single			
A 40-10 - A40-12 - A 45-10 - A45-12	96-99				CR106		Single
DAILY II Furgonato							
35-10	89-98				CR106		Single
35-12	95-99	CR106		Single			
35-8	91-98				CR106		Single
49-12 V	96-99	CR105		Single			
49-12 V	96-99				CR106		Single

follow IVECO

MODELLO MODEL	ANNO YEAR	ANT I FRONT INNER	ANT E FRONT OUTER	NOTE NOTES	POST I REAR INNER	POST E REAR OUTER	NOTE NOTES
DAILY II Pianale piatto							
35-10 - 35-12 - 49-10 - 49-12	96-99	CR105		Single			
35-10 - 35-12 - 49-10 - 49-12	96-99				CR106		Single
35-8	98-99	CR105		Single			
35-8	98-99				CR106		Single
40-10 W 4x4	97-99	CR105		Single			
40-10 W 4x4	97-99				CR106		Single
DAILY II Ribaltabile							
35-10 K	97-99	CR105		Single			
35-10 K	97-99				CR106		Single
35-12 K	96-98	CR105		Single			
35-12 K	96-98				CR106		Single
35-8 K	98-99	CR105		Single			
35-8 K	98-99				CR106		Single
49-10 K - 46-12 K	96-99	CR105		Single			
49-10 K - 46-12 K	96-99				CR106		Single
DAILY III Autobus							
40 C 11, 50 C 11 - 40 C 15, 50 C 15	99-06				CR106		Single
40 C 17, 50 C 17	04-06				CR106		Single
50 C 11 Natural Power (CNG)	02-06				CR106		Single

follow IVECO

MODELLO MODEL	ANNO YEAR	ANT I FRONT INNER	ANT E FRONT OUTER	NOTE NOTES	POST I REAR INNER	POST E REAR OUTER	NOTE NOTES
DAILY III Furgonato							
2.8 CNG	99-07	CR105		Single			
2.8 CNG	99-07				CR106		Single
29 L 12 V - 35 C 12 V, 35 S 12 V	02-07				CR106		Single
35 C 12 V, 35 S 12 V	02-07	CR105		Single			
35 C 14, 35 S 14 - 35 C 17, 35 S 17	04-06	CR105		Single			
35 C 14, 35 S 14 - 35 C 17, 35 S 17	04-06				CR106		Single
35 S 11 V,35 C 11 V - 35 S 13V,35 C 13 V	99-07	CR105		Single			
35 S 11 V,35 C 11 V - 35 S 13V,35 C 13 V	99-07				CR106		Single
35 S 15V, 35 C 15 V	02-07	CR105		Single			
35 S 15V, 35 C 15 V	02-07				CR106		Single
35 S 9 V,35 C 9 V - 50 C 11 - 50 C 13	99-07	CR105		Single			
35 S 9 V,35 C 9 V - 50 C 11 - 50 C 13	99-07				CR106		Single
40 C 13 - 45 C 14	99-06	CR105		Single			
40 C 13 - 45 C 14	99-06				CR106		Single
40 C 14 - 50 C 14 - 50 C 17	04-06	CR105		Single			
40 C 14 - 50 C 14 - 50 C 17	04-06				CR106		Single
40 C 15 - 50 C 15	01-06	CR105		Single			
40 C 15 - 50 C 15	01-06				CR106		Single
40 C 17, 40 S 17	05-06	CR105		Single			
40 C 17, 40 S 17	05-06				CR106		Single
DAILY III Pianale piatto							
35 C 10 V,35 S 10 V - 35 C 12, 35 S 12	02-06	CR105		Single			
35 C 10 V,35 S 10 V - 35 C 12, 35 S 12	02-06				CR106		Single
35 C 14, 35 S 14 - 40 C 14	04-06	CR105		Single			
35 C 15 - 35 C9, 35 S 9 - 40 C 15	01-06	CR105		Single			
35 C 15 - 35 C9, 35 S 9 - 40 C 15	01-06				CR106		Single
35 C 17, 35 S 17 - 40 C 17, 40 S 17	05-06	CR105		Single			
35 C 17, 35 S 17 - 40 C 17, 40 S 17	05-06				CR106		Single
35 S 11, 35 C 11 - 35 S 13,35 C 13	99-06	CR105		Single			
35 S 11, 35 C 11 - 35 S 13,35 C 13	99-06				CR106		Single
35 S 9, 35 C 9 - 40 C 13 - 50 C 11	99-06	CR105		Single			
35 S 9, 35 C 9 - 40 C 13 - 50 C 11	99-06				CR106		Single
36 C 14, 35 S 14	04-07				CR106		Single
40 C 14 - 50 C 14 - 50 C 17	04-06	CR105		Single			
40 C 14 - 50 C 14 - 50 C 17 - 65 C 14	04-06				CR106		Single
50 C 13	99-06	CR105		Single			
50 C 13	99-06				CR106		Single
50 C 15	01-06	CR105		Single			
50 C 15	01-06				CR106		Single

follow IVECO							
MODELLO MODEL	ANNO YEAR	ANT I FRONT INNER	ANT E FRONT OUTER	NOTE NOTES	POST I REAR INNER	POST E REAR OUTER	NOTE NOTES
DAILY IV Autobus							
35S14, 35S14 /P	06-11	CR105		Single			

follow IVECO

MODELLO MODEL	ANNO YEAR	ANT I FRONT INNER	ANT E FRONT OUTER	NOTE NOTES	POST I REAR INNER	POST E REAR OUTER	NOTE NOTES
DAILY IV Furgonato							
29L10 V - 29L12 V, 29L12 V/P	06-11	CR105		Single			
29L14 C, 29L14 C/P,29 L14 V, 29L14 V/P	06-11	CR105		Single			
35C10, 35S10 - 35C15 V, 35C15 V/P	06-11	CR105		Single			
35C10, 35S10 - 35C15 V, 35C15 V/P	06-11				CR106		Single
35C11 V, 35S11 V - 40C11 V	07-11	CR105		Single			
35C11 V, 35S11 V - 40C11 V	07-11				CR106		Single
35C12 V, 35C12 V/P,35S12 V, 35S12 V/P	06-11	CR105		Single			
35C12 V, 35C12 V/P,35S12 V, 35S12 V/P	06-11				CR106		Single
35C13 V, 35C13 V/P,35S13 V, 35S13 V/P					CR106		Single
35C14 GV, 35C14 GV/P	07-11	CR105		Single			
35C14 GV, 35C14 GV/P	07-11				CR106		Single
35C14 V, 35C14 V/P, 35S14 V, 35S14 V/P	09-11	CR105		Single			
35C14 V, 35C14 V/P, 35S14 V, 35S14 V/P	09-11				CR106		Single
35C17 V, 35C17 V/P, 35S17 V, 35S17 V/P	06-11				CR106		Single
35C18 V, 35C18 V/P, 35S18 V, 35S18 V/P	06-11	CR105		Single			
35C18 V, 35C18 V/P, 35S18 V, 35S18 V/P	06-11				CR106		Single
35S14 C, 35S14 C/P, 35S14 V	06-11	CR105		Single			
35S14 GV, 35S14 GV/P	07-11	CR105		Single			
35S14 GV, 35S14 GV/P	07-11				CR106		Single
35S14 V/P, 35C14 V	06-11	CR105		Single			
40C10 V	06-12				CR106		Single
40C12 V, 40C14 V/P - 45C15 V - 45C18	06-11	CR105		Single			
40C12 V, 40C14 V/P - 45C15 V - 45C18	06-11				CR106		Single
40C13 V, 40C13 V/P	07-11	CR105		Single			
40C13 V, 40C13 V/P	07-11				CR106		Single
40C14 GV, 40C14 GV/P	07-11	CR105		Single			
40C14 GV, 40C14 GV/P	07-11				CR106		Single
40C14 V, 40C14 V/P	09-11	CR105		Single			
40C14 V, 40C14 V/P	09-11				CR106		Single
40C15 V, 40C15 V/P - 40C18 V, 40C18 V/P	06-11	CR105		Single			
40C15 V, 40C15 V/P - 40C18 V, 40C18 V/P	06-11				CR106		Single
40C17 V, 40C17 V/P	07-11	CR105		Single			
40C17 V, 40C17 V/P	07-11				CR106		Single
45C17 V, 45C17 V/P	07-11	CR105		Single			
45C17 V, 45C17 V/P	07-11				CR106		Single
50C14 GV, 50C14 GV/P	07-11	CR105		Single			
50C14 GV, 50C14 GV/P	07-11				CR106		Single
50C14 V, 50C14 V/P	09-11	CR105		Single			
50C14 V, 50C14 V/P	09-11				CR106		Single
50C15 V, 50C15 V/P	06-11	CR105		Single			
50C15 V, 50C15 V/P	06-11				CR106		Single
50C17 V, 50C17 V/P - 55C17	07-11	CR105		Single			
50C17 V, 50C17 V/P - 55C17	07-11				CR106		Single
50C18 V, 50C18 V/P - 60C15 V	06-11	CR105		Single			

follow IVECO

MODELLO MODEL	ANNO YEAR	ANT I FRONT INNER	ANT E FRONT OUTER	NOTE NOTES	POST I REAR INNER	POST E REAR OUTER	NOTE NOTES
DAILY IV Pianale piatto							
35C10, 35S10 - 35C12, 35S12	06-11	CR105		Single			
35C10, 35S10 - 35C12, 35S12	06-11				CR106		Single
35C11, 35S11, 35S11D, 35S11 /P	07-11				CR106		Single
35C13, 35C13 /P, 35S13 D, 35S13, 35S13 /P	07-11				CR106		Single
35C14 G, 35C14 G/P	07-11	CR105		Single			
35C14 G, 35C14 G/P	07-11				CR106		Single
35C14, 35C14 /P, 35S14, 35S14 /P	09-11	CR105		Single			
35C14, 35C14 /P, 35S14, 35S14 /P	09-11				CR106		Single
35C14, 35S14, 35S14 /P - 35C15	06-11	CR105		Single			
35C14, 35S14, 35S14 /P - 35C15	06-11				CR106		Single
35C18, 35S18 - 40C10 - 40C12	06-11	CR105		Single			
35C18, 35S18 - 40C10 - 40C12	06-11				CR106		Single
35S14 D, 35S14 D/P	09-11	CR105		Single			
35S14 D, 35S14 D/P	09-11				CR106		Single
35S14 G, 35S14 G/P, 35C14 GD	07-11	CR105		Single			
35S14 G, 35S14 G/P, 35C14 GD	07-11				CR106		Single
35S17 W, 35S17 WD	07-11				CR106		Single
40C11, 40C11 D - 40C13, 40C13 /P	07-11				CR106		Single
40C14 , 40C14 /P	09-11	CR105		Single			
40C14 , 40C14 /P	09-11				CR106		Single
40C14 G, 40C14 G/P	07-11	CR105		Single			
40C14 G, 40C14 G/P	07-11				CR106		Single
40C15 - 40C18 - 45C15	06-11	CR105		Single			
40C15 - 40C18 - 45C15	06-11				CR106		Single
40C17, 40C17 /P	07-11				CR106		Single
45C14, 45C14 /P - 50C14, 50C14 /P	09-11	CR105		Single			
45C17, 45C17 /P	07-11	CR105		Single			
45C17, 45C17 /P	07-11				CR106		Single
45C18, 45C18 /P, 45C18 D, 45C18 D/P	06-11	CR105		Single			
45C18, 45C18 /P, 45C18 D, 45C18 D/P	06-11				CR106		Single
50C14 G, 50C14 G/P	07-11	CR105		Single			
50C14 G, 50C14 G/P	07-11				CR106		Single
50C14 GD, 50C14 GD/P	07-11	CR105		Single			
50C14 GD, 50C14 GD/P	07-11				CR106		Single
50C15 - 50C18	06-11	CR105		Single			
50C15 - 50C18	06-11				CR106		Single
50C17, 50C17 /P	07-11	CR105		Single			
50C17, 50C17 /P	07-11				CR106		Single
55S17 W, 55S17 WD	07-11				CR106		Single

follow IVECO

MODELLO MODEL	ANNO YEAR	ANT I FRONT INNER	ANT E FRONT OUTER	NOTE NOTES	POST I REAR INNER	POST E REAR OUTER	NOTE NOTES
DAILY IV Ribaltabile							
35C10 K - 35C12 - 35C15 - 35C18 - 50C15	06-11	CR105		Single			
35C10 K - 35C12 - 35C15 - 35C18 - 50C15	06-11				CR106		Single
35C11 K, 35C11 DK, 35S11 K, 35S11 DK	07-11	CR105		Single			
35C11 K, 35C11 DK, 35S11 K, 35S11 DK	07-11				CR106		Single
35C13 K, 35C13 DK, 35S13 K, 35S13 DK	07-11	CR105		Single			
35C13 K, 35C13 DK, 35S13 K, 35S13 DK	07-11				CR106		Single
35C14 K, 35C14 DK, 35S14 K, 35S14 DK	09-11	CR105		Single			
35C14 K, 35C14 DK, 35S14 K, 35S14 DK	09-11				CR106		Single
35C17 K, 35C17 DK, 35S17 K, 35S17 DK	07-11	CR105		Single			
35C17 K, 35C17 DK, 35S17 K, 35S17 DK	07-11				CR106		Single
35S14 K, 35S14 DK	07-11				CR106		Single
40C14 K, 40C14 DK - 50C14 K, 50C14 DK	09-11	CR105		Single			
40C14 K, 40C14 DK - 50C14 K, 50C14 DK	09-11				CR106		Single
40C17 K, 40C17 DK - 50C17 K, 50C17 DK	07-11	CR105		Single			
40C17 K, 40C17 DK - 50C17 K, 50C17 DK	07-12				CR106		Single
50C18 - 60C15 - 60C18	06-11	CR105		Single			
50C18 - 60C15 - 60C18	06-11				CR106		Single
60C14 K, 60C14 DK	09-11	CR105		Single			
60C14 K, 60C14 DK	09-11				CR106		Single
60C17 K, 60C17 DK	07-11	CR105		Single			
60C17 K, 60C17 DK	07-11				CR106		Single
65C14 K, 65C14 DK	09-11	CR105		Single			
65C14 K, 65C14 DK	09-11				CR106		Single
65C17 K, 65C17 DK, 65C17KK	07-11	CR105		Single			
65C17 K, 65C17 DK, 65C17KK	07-11				CR106		Single
70C14 K, 70C14 DK, 70C14 KK	09-11	CR105		Single			
70C14 K, 70C14 DK, 70C14 KK	09-11				CR106		Single
70C17 K, 70C17 DK, 70C17 KK	09-11	CR105		Single			
70C17 K, 70C17 DK, 70C17 KK	09-11				CR106		Single
DAILY LINE Autobus							
40C15, 50C15, 60C15	14-16	CR105		Single			
40C15, 50C15, 60C15	14-16	CR106		Single			
40C17, 50C17, 60C17	14-16	CR105		Single			
40C17, 50C17, 60C17	14-16	CR106		Single			
50C14Natural Power	14->	CR105		Single			
50C14Natural Power	14->	CR106		Single			
DAILY TOURYS Autobus							
50C17, 65C17	14-16	CR105		Single			
50C17, 65C17	14-16				CR106		Single

follow IVECO

MODELLO MODEL	ANNO YEAR	ANT I FRONT INNER	ANT E FRONT OUTER	NOTE NOTES	POST I REAR INNER	POST E REAR OUTER	NOTE NOTES
DAILY V Furgonato							
29L11 V, 35C11 V, 35S11 V, 40C11 V	11-14	CR105		Single			
29L11 V, 35C11 V, 35S11 V, 40C11 V	11-14				CR106		Single
29L13 V, 35C13 V, 35S13 V, 40C13 V	11-14	CR105		Single			
29L13 V, 35C13 V, 35S13 V, 40C13 V	11-14				CR106		Single
29L15 V, 35C15 V, 35S15L V, 40C15L V	11-14	CR105		Single			
29L15 V, 35C15 V, 35S15L V, 40C15L V	11-14				CR106		Single
35C15 V, 40C15 V, 45C15 V, 50C15 V	11-14	CR105		Single			
35C15 V, 40C15 V, 45C15 V, 50C15 V	11-14				CR106		Single
35C17 V, 40S17 V, 40C17 V, 50C17 V	11-14	CR105		Single			
35C17 V, 40S17 V, 40C17 V, 50C17 V	11-14				CR106		Single
35C21 V, 40S21 V, 40C21 V, 45C21 V	11-14	CR105		Single			
35C21 V, 40S21 V, 40C21 V, 45C21 V	11-14				CR106		Single
50C21 V - 35S, 35C Electric	11-14	CR105		Single			
50C21 V - 35S, 35C Electric	11-14				CR106		Single
60C15 V, 65C15 V - 60C17 V	11-14	CR105		Single			
60C15 V, 65C15 V - 60C17 V	11-14				CR106		Single
DAILY V Pianale piatto							
26L11, 26L11 D, 35C11 D, 35S11, 40C11	11-14	CR105		Single			
26L11, 26L11 D, 35C11 D, 35S11, 40C11	11-14				CR106		Single
29L13, 26L13 D, 35C13 D, 35S13, 40C13	11-14	CR105		Single			
29L13, 26L13 D, 35C13 D, 35S13, 40C13	11-14				CR106		Single
29L15 V, 35S15 , 35C15L V	11-14	CR105		Single			
29L15 V, 35S15 , 35C15L V	11-14				CR106		Single
35C15, 35C15D, 35S15	11-14	CR105		Single			
35C15, 35C15D, 35S15	11-14				CR106		Single
35C17, 35C17D, 35S17	11-14	CR105		Single			
35C17, 35C17D, 35S17	11-14				CR106		Single
35C21, 35S21, 40C21	11-14	CR105		Single			
35C21, 35S21, 40C21	11-14				CR106		Single
40C15, 45C15,50C15	11-14	CR105		Single			
40C15, 45C15,50C15	11-14				CR106		Single
40C15L V, 50C15L V	11-14	CR105		Single			
40C15L V, 50C15L V	11-14				CR106		Single
40C17, 45C17, 50C17	11-14	CR105		Single			
40C17, 45C17, 50C17	11-14				CR106		Single
45C21, 50C21, 60C21	11-14	CR105		Single			
45C21, 50C21, 60C21	11-14				CR106		Single
50 C Electric	11-14	CR105		Single			
50 C Electric	11-14				CR106		Single

follow IVECO

MODELLO MODEL	ANNO YEAR	ANT I FRONT INNER	ANT E FRONT OUTER	NOTE NOTES	POST I REAR INNER	POST E REAR OUTER	NOTE NOTES
DAILY V Ribaltabile							
35C11K, 35S11DKP - 35C13K, 35C13DKP	11-14	CR105		Single			
35C11K, 35S11DKP - 35C13K, 35C13DKP	11-14				CR106		Single
35C15K, 35S15DKP, 50C15K	11-14	CR105		Single			
35C15K, 35S15DKP, 50C15K	11-14				CR106		Single
35C17K, 35S17DKP, 50C17K	11-14	CR105		Single			
35C17K, 35S17DKP, 50C17K	11-14				CR106		Single
60C15K, 65C15DK, 70C15K	11-14	CR105		Single			
60C15K, 65C15DK, 70C15K	11-14				CR106		Single
65C17DK 70C17K	11-14	CR105		Single			
65C17DK 70C17K	11-14				CR106		Single

follow IVECO

MODELLO MODEL	ANNO YEAR	ANT I FRONT INNER	ANT E FRONT OUTER	NOTE NOTES	POST I REAR INNER	POST E REAR OUTER	NOTE NOTES
DAILY VI Furgonato							
33S11, 35S11, 35C11	14-16	CR098		Single			
33S11, 35S11, 35C11	14-16	CR105		Single			
33S11, 35S11, 35C11	14-16	CR106		Single			
33S12, 35S12, 35C12	16->	CR098		Single			
33S13, 35S13, 35C13	14-16	CR098		Single			
33S13, 35S13, 35C13	14-16	CR105		Single			
33S13, 35S13, 35C13	14-16	CR106		Single			
33S14,35S14,35C14	16->	CR098		Single			
33S15,35S15,35C15	14-16	CR098		Single			
33S15,35S15,35C15	14-16	CR105		Single			
33S15,35S15,35C15	14-16	CR106		Single			
33S16,35S16,35C16 - 35S/E	16->	CR098		Single			
35S15,35C15,40C15,50C15,	16->	CR098		Single			
35S15,35C15,40C15,50C15,	14-16	CR105		Single			
35S15,35C15,40C15,50C15,	14-16	CR106		Single			
35S17,35C17, 40C17, 50C17	14-16	CR105		Single			
35S17,35C17, 40C17, 50C17	14-16	CR106		Single			
35S18,35C18, 40C18, 50C18	16->	CR098		Single			
35S21,35C21, 40C21,	14->	CR105		Single			
35S21,35C21, 40C21,	14->	CR106		Single			
50C121, 65C21, 70C21	14->	CR105		Single			
50C121, 65C21, 70C21	14->	CR106		Single			
55C17, 65C17, 70C17	14-16	CR105		Single			
55C17, 65C17, 70C17	14-16	CR106		Single			
65C15,70C15	16->	CR098		Single			
65C15,70C15	14-16	CR105		Single			
65C15,70C15	14-16	CR106		Single			
65C18,70C18 - 45C/E,50C/E	16->	CR098		Single			
Natural Power 35S14,35C14,40C14	16->	CR098		Single			
Natural Power 35S14,35C14,40C14	14->	CR105		Single			
Natural Power 35S14,35C14,40C14	14->	CR106		Single			
Natural Power 50C14, 65C14,70C14	16->	CR098		Single			
Natural Power 50C14, 65C14,70C14	14->	CR105		Single			
Natural Power 50C14, 65C14,70C14	14->	CR106		Single			

follow IVECO

MODELLO MODEL	ANNO YEAR	ANT I FRONT INNER	ANT E FRONT OUTER	NOTE NOTES	POST I REAR INNER	POST E REAR OUTER	NOTE NOTES
DAILY VI Pianale piatto							
33S11, 35S11, 35C11	14-16	CR098		Single			
33S11, 35S11, 35C11	14-16	CR105		Single			
33S11, 35S11, 35C11	14-16	CR106		Single			
33S12, 35S12, 35C12	16->	CR098		Single			
33S13, 35S13, 35C13	14-16	CR098		Single			
33S13, 35S13, 35C13	14-16	CR105		Single			
33S13, 35S13, 35C13	14-16	CR106		Single			
33S14,35S14,35C14	16->	CR098		Single			
33S15,35S15,35C15	14-16	CR105		Single			
33S15,35S15,35C15	14-16	CR106		Single			
33S16,35S16,35C16 - 35S/E, 35C/E	16->	CR098		Single			
35S14,35S15,35C15, 40S14,40C15	14-16	CR105		Single			
35S14,35S15,35C15, 40S14,40C15	14-16	CR106		Single			
35S15,35C15,40C15,50C15,	16->	CR098		Single			
35S17,35C17, 40C17,45S17	14-16	CR105		Single			
35S17,35C17, 40C17,45S17	14-16	CR106		Single			
35S18,35C18, 40C18, 50C18	16->	CR098		Single			
35S21, 35C21, 40C21, 50C21,	14->	CR105		Single			
35S21, 35C21, 40C21, 50C21,	14->	CR106		Single			
45C17, 50C17, 55C17, 65C17	14-16	CR105		Single			
45C17, 50C17, 55C17, 65C17	14-16	CR106		Single			
50C15, 65C15, 70C15	14-16	CR105		Single			
50C15, 65C15, 70C15	14-16	CR106		Single			
55S17 4x4	15-16	CR105		Single			
55S17 4x4	15-16	CR106		Single			
65C15,70C15	16->	CR098		Single			
65C18,70C18 - 45C/E,50C/E	16->	CR098		Single			
65C21, 70C21	14->	CR105		Single			
65C21, 70C21	14->	CR106		Single			
Natural Power 35S14,35C14,40C14	14->	CR098		Single			
Natural Power 35S14,35C14,40C15	14->	CR105		Single			
Natural Power 35S14,35C14,40C15	14->	CR106		Single			
Natural Power 40C15, 50C14	14->	CR098		Single			
Natural Power 40C15, 50C14	14->	CR105		Single			
Natural Power 40C15, 50C14	14->	CR106		Single			
MASSIF Pick-up							
3.0 HPI	08-11	CR106		Single			
3.0 HPT	08-11				CR106		Single
MASSIF Single Cab							
3.0 HPI - 3.0 HPT	08-11	CR106		Single			

follow IVECO							
MODELLO MODEL	ANNO YEAR	ANT I FRONT INNER	ANT E FRONT OUTER	NOTE NOTES	POST I REAR INNER	POST E REAR OUTER	NOTE NOTES
MASSIF Station Wagon							
3.0 HPI - 3.0 HPT	08-11	CR106		Single			
KIA							
MODELLO MODEL	ANNO YEAR	ANT I FRONT INNER	ANT E FRONT OUTER	NOTE NOTES	POST I REAR INNER	POST E REAR OUTER	NOTE NOTES
AVELLA							
1.3	94->				CR023	CR006	
CAPITAL							
1.5-1.8	90-94				CR023	CR006	
CEE'D							
1.4 CVVT	12->	CR087		Single			
1.6 CRDI 110 - 1.6 CRDI 115	12->	CR087		Single			
1.6 CRDI 128 - 1.6 CRDI 28	12->	CR087		Single			
1.6 CVVT - 1.6 GDI	12->	CR087		Single			
CEE'D 2 volumi							
1.4	06->	CR087		Single			
1.4 CVVT	10->	CR087		Single			
1.6	06->	CR087		Single			
1.6 CRDI 115	06->	CR087		Single			
1.6 CRDI 128	10->	CR087		Single			
1.6 CRDI 90	06->	CR087		Single			
1.6 CVVT	10->	CR087		Single			
2.0	06->	CR087		Single			
2.0 CRDI	07->	CR087		Single			
2.0 CRDI 140	07->	CR087		Single			
CEE'D Sportwagon							
1.4 CRDI - 1.4 CVVT	12->	CR087		Single			
1.6 CRDI - 1.6 GDI	12->	CR087		Single			

follow KIA

MODELLO MODEL	ANNO YEAR	ANT I FRONT INNER	ANT E FRONT OUTER	NOTE NOTES	POST I REAR INNER	POST E REAR OUTER	NOTE NOTES
CEE'D SW							
1.4	07->	CR087		Single			
1.4 CVVT	10->	CR087		Single			
1.6	07->	CR087		Single			
1.6 CRDI 115 - 1.6 CRDI 90	07->	CR087		Single			
1.6 CRDI 128	10->	CR087		Single			
1.6 CVVT	09->	CR087		Single			
2.0 - 2.0 CRDI 140	07->	CR087		Single			
CONCORD							
1.8-2.0	92-94	CR023	CR006				
PRO CEE'D							
1.4	08->	CR087		Single			
1.4	08->	CR087		Single			
1.4 CRDI	13->	CR087		Single			
1.4 CVVT	13->	CR087		Single			
1.6 - 1.6 CRDI 115	08->	CR087		Single			
1.6 CRDI	13->	CR087		Single			
1.6 CRDI 128	10->	CR087		Single			
1.6 CRDI 90	08->	CR087		Single			
1.6 CVVT	10->	CR087		Single			
1.6 GDI - 1.6 GT	13->	CR087		Single			
2.0	08->	CR087		Single			
2.0 CRDI 140	08->	CR087		Single			
SORENTO I							
2.4 - 2.5 CRDi - 3.5 V6 4WD	02->	CR110		Single			
3.3 V6	06->	CR110		Single			
3.3 V6 4WD	07->	CR110		Single			
SOUL							
1.6 CRDI 115	09->	CR087		Single			
1.6 CRDI 128	09->	CR087		Single			
1.6 CVVT	09->	CR087		Single			
1.6 GDI	11->	CR087		Single			
SPORTAGE II							
2.0 16V 4WD - 2.7 V6 4WD	04->				CR110		Single
2.0 CRDi 4WD	04-10				CR110		Single

follow KIA

MODELLO MODEL	ANNO YEAR	ANT I FRONT INNER	ANT E FRONT OUTER	NOTE NOTES	POST I REAR INNER	POST E REAR OUTER	NOTE NOTES
SPORTAGE III							
2.0 CRDi AWD - 2.0 CVVT AWD	10->				CR110		Single
2.0 GDI AWD	14->				CR110		Single
SPORTAGE IV							
1.6 TGDI AWD - 2.0 CRDi AWD	15->				CR110		Single
VENGA							
1.4 CRDI 75 - 1.4 CRDI 90	10->	CR087		Single			
1.4 CVVT - 1.6 CRDI 115	10->	CR087		Single			
1.6 CRDI 128 - 1.6 CVVT	10->	CR087		Single			

LADA

MODELLO MODEL	ANNO YEAR	ANT I FRONT INNER	ANT E FRONT OUTER	NOTE NOTES	POST I REAR INNER	POST E REAR OUTER	NOTE NOTES
LADA							
1.1-1.3-1.5-1.6	74->	CR020	CR013		CR044		Single
NIVA							
4x4	78-90	CR049	CR049				
SAMARA							
Tutti i tipi/All types/Tous types	85->	CR008		Single	CR001		Single
VAZ							
2101-2102-21011	69->	CR020	CR013				
2103-2106	69->	CR020	CR013				

LANCIA

MODELLO MODEL	ANNO YEAR	ANT I FRONT INNER	ANT E FRONT OUTER	NOTE NOTES	POST I REAR INNER	POST E REAR OUTER	NOTE NOTES
DELTA II							
1.4 i.e.	94-99	CR099		Single			
1.6 i.e.	93-99	CR099		Single			
1.6 i.e. 16V	96-99	CR099		Single			

follow LANCIA

MODELLO MODEL	ANNO YEAR	ANT I FRONT INNER	ANT E FRONT OUTER	NOTE NOTES	POST I REAR INNER	POST E REAR OUTER	NOTE NOTES
DELTA III							
1.4 - 1.6 D Multijet	08-14	CR101		Single			
1.4 16V	10-14	CR101		Single			
1.4 Bifuel	11-14	CR101		Single			
1.8 - 1.9 D Multijet	09-14	CR104		Single			
2.0 D Multijet	08-14	CR104		Single			
LYBRA							
1.6	00-05	CR099		Single			
1.6 16V - 1.8 16V - 1.9 JTD	99-05	CR099		Single			
LYBRA SW							
1.6	00-05	CR099		Single			
1.6 16V - 1.8 16V - 1.9 JTD	99-05	CR099		Single			
MUSA							
1.3 D Multijet - 1.9 D Multijet	04-12	CR099		Single			
1.4 LPG	10-12	CR099		Single			
Y							
1.1	95-03	CR099		Single			
1.2 - 1.4 12V	96-03	CR099		Single			
1.2 16V	97-03	CR099		Single			
YPSILON							
1.2 - 1.2 Bifuel	11->	CR102	CR102	Signle			

LANCIA/AUTOBIANCHI

MODELLO MODEL	ANNO YEAR	ANT I FRONT INNER	ANT E FRONT OUTER	NOTE NOTES	POST I REAR INNER	POST E REAR OUTER	NOTE NOTES
A 112							
Tutti i tipi/All types/Tous types	82-86	CR001		Single			
BETA							
Tutti i tipi/All types/Tous types	72-81				CR016		Single
Montecarlo		CR001		Single			

follow LANCIA/AUTOBIANCHI

MODELLO MODEL	ANNO YEAR	ANT I FRONT INNER	ANT E FRONT OUTER	NOTE NOTES	POST I REAR INNER	POST E REAR OUTER	NOTE NOTES
DEDRA							
1.6	89->	CR018		Single			
1.6	93->	CR018		Single			
1.8-2.0	89->	CR016		Single			
1.8-2.0-2.0 Turbo	94->	CR016		Single			
1.9 Turbo Diesel	89->	CR016		Single			
4WD	91-92	CR016		Single	CR016		Single
DELTA							
1.3-1.5	80->	CR002		Single			
1.6	83->	CR002		Single			
1.6	93->	CR018		Single			
1.6 i.e Turbo	88-93	CR002		Single			
1.8-2.0 16v	93->	CR016		Single			
1.9 Turbo Diesel	93->	CR016		Single			
4 WD	88-94	CR016		Single	CR016		Single
4WD	86->	CR002		Single	CR002		Single
Diesel-Turbo Diesel	85->	CR002		Single			
HF	85->	CR002		Single			
DELTA I							
1.6 G.T	82-86	CR002		Single			
1.6 G.T i.e	86-88	CR002		Single			
1.8 S4	85-88	CR002		Single			
1.9 Turbo DS	86-89	CR002		Single			
2.0 16V HF	89-91	CR002		Single			
2.0 HF Integrale	87-89	CR002		Single			
HF Turbo	87-89	CR002		Single			
PRISMA							
1.3-1.5	80->	CR002		Single			
1.6	83->	CR002		Single			
1.6 i.e	86-89	CR002		Single			
1.6 i.e super	87-89	CR002		Single			
4WD	86->	CR002		Single	CR002		Single
Diesel-Turbo Diesel	85->	CR002		Single			

follow LANCIA/AUTOBIANCHI

MODELLO MODEL	ANNO YEAR	ANT I FRONT INNER	ANT E FRONT OUTER	NOTE NOTES	POST I REAR INNER	POST E REAR OUTER	NOTE NOTES
THEMA							
2.0 i.e-2.0 16v-	84->	CR016		Single			
2.0 Turbo i.e- 2.8 6V	85->	CR016		Single			
8.32 Ferrari	85-92	CR016		Single			
Turbo Diesel	85->	CR016		Single			
Y							
1.2-1.4	95->	CR018		Single			
ZETA (220)							
2,0 16V	98-02	CR063		Single			
2,0 JTD	99-02	CR063		Single			
2,0 Turbo	95-02	CR063		Single			
2,1 td	96-99	CR063		Single			

LAND ROVER

MODELLO MODEL	ANNO YEAR	ANT I FRONT INNER	ANT E FRONT OUTER	NOTE NOTES	POST I REAR INNER	POST E REAR OUTER	NOTE NOTES
FREELANDER 2							
2.2 SD4 4x4 - 2.2 eD4	10-14				CR121		Single
2.2 TD4 4x4 - 3.2 4x4	06-14				CR121		Single
FREELANDER I							
1.8 16V 4x4	98-06	CR121		Single			
2.0 Td4 4x4 - 2.5 V6 4x4	00-06	CR121		Single			
FREELANDER I Soft Top							
1.8 16V 4x4 - 2.0 DI 4x4	98-06	CR121		Single			

MASERATI

MODELLO MODEL	ANNO YEAR	ANT I FRONT INNER	ANT E FRONT OUTER	NOTE NOTES	POST I REAR INNER	POST E REAR OUTER	NOTE NOTES
BITURBO							
S-420-425		CR014	CR013				
Spyder		CR014	CR013				

follow MASERATI

MODELLO MODEL	ANNO YEAR	ANT I FRONT INNER	ANT E FRONT OUTER	NOTE NOTES	POST I REAR INNER	POST E REAR OUTER	NOTE NOTES
Quattro PORTE 4900							
Tutti i tipi/All types/Tous types		CR014	CR013				

MAZDA

MODELLO MODEL	ANNO YEAR	ANT I FRONT INNER	ANT E FRONT OUTER	NOTE NOTES	POST I REAR INNER	POST E REAR OUTER	NOTE NOTES
1000							
Tutti i tipi/All types/Tous types	70-78		CR006				
121							
(I) 1.1- 1.3	87-90	CR056	CR056				
(II) 1.3 16v	90-96	CR056	CR056				
1.1-1.3 RTI - RTD	86-	CR023	CR006				
1300							
Tutti i tipi/All types/Tous types	70-78		CR006				
2							
1.25 - 1.4 - 1.4 CD - 1.6	03-07	CR107		Single			
323							
Tutti i tipi/All types/Tous types			CR006				
(II Hatchback) 1.1-1.3-1.5	80-85	CR056	CR056				
(II) 1.1 - 1.3-1.5	81-86	CR056	CR056				
(III) 1.1-1.3-1.5-1.5i-1.5iT	85-89	CR056	CR056				
(III) 1.6GT-1.6GT Turbo-1.7D	85-91	CR056	CR056				
(I) 1.3 - 1.5	78-86	CR056	CR056				
(III Hatchback) 1.1-1.3-1.4-1.6	85-89	CR056	CR056				
(III Hatchback) 1.5-1.5i-1.5iT	85-89	CR056	CR056				
(III Hatchback) 1.6-1.6GT	85-89	CR056	CR056				
(III Hatchback) 1.6GT T-1.7 D	85-91	CR056	CR056				
(III Hatchback)1.6GTT 4WD	87-91	CR056	CR056		CR056	CR056	
(III Station Wagon) 1.5-1.6-1.7D	86-95	CR056	CR056				
(III Station Wagon)1.6 4X4	87-91	CR056	CR056		CR056	CR056	
1.1-1.3-1.5-1.6	85-88				CR005	CR013	
BREAKS 2WD	86-95				CR013		
C IV 1.6	89-91	CR056	CR056				
da ch 500001	81->					CR006	

follow MAZDA

MODELLO MODEL	ANNO YEAR	ANT I FRONT INNER	ANT E FRONT OUTER	NOTE NOTES	POST I REAR INNER	POST E REAR OUTER	NOTE NOTES
6							
1.8 - 2.0 - 2.0 DI - 2.3	02->	CR080		Single			
1.8 MZR - 2.0 MZR	07->	CR080		Single			
2.0 MZR-CD	07->	CR080		Single			
2.2 D	10->	CR080		Single			
2.2 MZR-CD	09->	CR080		Single			
2.3 MPS Turbo	05->	CR080		Single			
2.5 MZR	07->	CR080		Single			
6 2 Volumi/coda spiovente							
1.8 - 2.0	07->	CR080		Single			
2.2	09->	CR080		Single			
2.5	07->	CR080		Single			
6 Hatchback							
1.8 - 2.0 - 2.0 DI - 2.3	02->	CR080		Single			
6 Station Wagon							
1.8 - 2.0 - 2.0 DI - 2.3	02->	CR080		Single			
1.8 MZR - 2.0 MZR	08->	CR080		Single			
2.2 MZR-CD	09->	CR080		Single			
2.5 MZR	08->	CR080		Single			
616							
1.6	71-78		CR006				
626							
Tutti i tipi/All types/Tous types	78-82		CR013				
Tutti i tipi/All types/Tous types	83-87				CR023	CR013	
626 IV							
1.8 i - 2.0 D GLX Comprex	92-97	CR080		Single			
2.0 i - 2.0 i 4WD	92-97	CR080		Single			

follow MAZDA							
MODELLO MODEL	ANNO YEAR	ANT I FRONT INNER	ANT E FRONT OUTER	NOTE NOTES	POST I REAR INNER	POST E REAR OUTER	NOTE NOTES
626 IV Hatchback							
1.8 - 2.0 i	91-97	CR080		Single			
2.0 D GLX Comprex	93-97	CR080		Single			
2.0 i 4WD	92-97	CR080		Single			
2.5 24V	92-97	CR080		Single			
626 V							
1.8 - 2.0	97-02	CR080		Single			
2.0 DITD - 2.0 Turbo DI	98-02	CR080		Single			
2.0 TD	00-02	CR080		Single			
626 V Hatchback							
1.8 - 2.0	97-02	CR080		Single			
2.0 DITD - 2.0 H.P.	98-02	CR080		Single			
2.0 TD	00-02	CR080		Single			
2.0 Turbo DI	98-02	CR080		Single			
626 V Station Wagon							
1.8 - 2.0	98-02	CR080		Single			
2.0 DITD	99-02	CR080		Single			
2.0 H.P. - 2.0 Turbo DI	98-02	CR080		Single			
2.0 TD	0-02	CR080		Single			
808							
Tutti i tipi/All types/Tous types	72-78		CR006				
818							
Tutti i tipi/All types/Tous types			CR013				
929							
(II) 2.0-2.0i-Coupé	84-87	CR056	CR056				
L	->82		CR013				
DEMIO							
1.3 16v-1.5 16v	98-00	CR056	CR056				

follow MAZDA

MODELLO MODEL	ANNO YEAR	ANT I FRONT INNER	ANT E FRONT OUTER	NOTE NOTES	POST I REAR INNER	POST E REAR OUTER	NOTE NOTES
MPV I							
2.5 TD	96-99	CR080		Single			
3.0 i V6	95-99	CR080		Single			
MPV II							
2.0	99-02	CR080		Single			
2.0 DI - 2.3	02->	CR080		Single			
2.5 V6	99-02	CR080		Single			
3.0 i V6	02->	CR080		Single			
MX-6							
2.0 - 2.5 24V	92->	CR080		Single			
2.5 i 24V	94->	CR080		Single			
RX 2							
Tutti i tipi/All types/Tous types	71-78		CR006				
RX 3							
Tutti i tipi/All types/Tous types	72-78		CR006				
RX 5							
Tutti i tipi/All types/Tous types	78-79	CR013	CR014				
RX 7 II							
Cabriolet Turbo	89-91	CR080		Single			
Turbo	87-91	CR080		Single			
Wankel	85-89	CR080		Single			
XEDOS 6							
1.6 16V - 2.0 V6	92-94	CR080		Single			
XEDOS 9							
2.0 24V - 2.5 24V	93-00	CR080		Single			
2.3 24V	95-00	CR080		Single			
2.5 V6	00->	CR080		Single			

MERCEDES

MODELLO MODEL	ANNO YEAR	ANT I FRONT INNER	ANT E FRONT OUTER	NOTE NOTES	POST I REAR INNER	POST E REAR OUTER	NOTE NOTES
190 SERIES							
190 -> ch.003512	83->	CR005	CR006				
190 ch 002896-> ABS	83->	CR014	CR006				
190 ch003513->	83->	CR014	CR006				
190->ch. 002895 ABS	83->	CR005	CR006				
190D (2.5)	86->	CR014	CR006				
190D ->ch.000042	83->	CR005	CR006				
190D ch.000001 ->ABS	83->	CR014	CR006				
190E (2.3-2.6)	86->	CR014	CR006				
190E ch.005540->ABS	83->	CR014	CR006				
190E ch.006893->	83->	CR014	CR006				
190E(2.3-16/ 2.5-16)	86->	CR014	CR006				
190E->ch. 005539 ABS	83->	CR005	CR006				
190E->ch.006892	83->	CR005	CR006				
200 SERIES							
200 T Touring		CR014	CR013				
200-200D	67-76	CR014	CR013				
200-200D	76-85	CR022	CR024				
200-200E-200D	85->	CR014	CR013				
200CECabrio Coup,	90-94	CR014	CR013				
200T-200TE-200TD	86->	CR014	CR013				
208	95-98	CR035					
220 SERIES							
220-220 D	67-76	CR014	CR013				
220-220 D	76-85	CR022	CR024				
220CECabrio Coup,	93-94	CR014	CR013				
220E-220TE	93-94	CR014	CR013				
230 SERIES							
230	76-85	CR022	CR024				
230 Coup,	87-94	CR014	CR013				
230 E 230 TE (T124)	86-93		CR033				
230 TE Touring		CR014	CR013				
230/4-230/6-230/8	67-76	CR014	CR013				
230E	85->	CR014	CR013				
230T	76-85	CR022	CR024				

follow MERCEDES

MODELLO MODEL	ANNO YEAR	ANT I FRONT INNER	ANT E FRONT OUTER	NOTE NOTES	POST I REAR INNER	POST E REAR OUTER	NOTE NOTES
240 SERIES							
240 D	67-76	CR014	CR013				
240 D - 240 TD	76-85	CR022	CR024				
250 SERIES							
250	76-85	CR022	CR024				
250 D	85->	CR014	CR013				
250 D	85-93		CR033				
250 T	76-85	CR022	CR024				
250 TD	86->	CR014	CR013				
250-250C-250CE	67-76	CR014	CR013				
250S-250SE-250SL	65-67	CR014	CR013				
260 SERIES							
260 E	85-93	CR014	CR013				
260 E (T124, W124)	86-93		CR033				
260 SE	86-92	CR022	CR024				
280 SERIES							
280	76-85	CR022	CR024				
280 C -280 CE CUPE	77-85	CR022	CR024				
280 C-280 CE	71->	CR014	CR013				
280 E	76-85	CR022	CR024				
280 E	93-95		CR033				
280 S-280SE-280SEL	73-85	CR022	CR024				
280 SL-280 SLC	93-95	CR014	CR013				
280 TE	76/85	CR022	CR024				
280S-280SE-	65-67	CR014	CR013				
280SEL	67-79	CR014	CR013				

follow MERCEDES

MODELLO MODEL	ANNO YEAR	ANT I FRONT INNER	ANT E FRONT OUTER	NOTE NOTES	POST I REAR INNER	POST E REAR OUTER	NOTE NOTES
300 SERIES							
300 CE - CABRIOLET	90-94		CR033				
300 CE- 300 CE-24	86-94	CR014	CR013				
300 E-24	90-93	CR014	CR013				
300 SE - 300 SL	86-92	CR022	CR024				
300 SEB	65-67	CR014	CR013				
300 SEL (3.5-6.3)	->72	CR014	CR013				
300 SL	89-93		CR033				
300 TD	76-85	CR022	CR024				
300 TD-300 TE	86->	CR014	CR013				
300D	76-85	CR022	CR025				
300E-300D-300 SL	85->	CR014	CR013				
307 D	78-90	CR035					
308 D	90-94	CR035					
309 D	83-90	CR035					
310 D	89-94	CR035					
320 SERIES							
320 CE Coup,	93->	CR014	CR013				
320 E -320 TE	93-94	CR014	CR013				
320 E CABRIOLET	93->		CR033				
350 SERIES							
350 SE - 350 SEL	75-80	CR022	CR024				
350 SL-350 SLC	71->	CR014	CR013				
380 SERIES							
380 SE - 380 SEL	75-80	CR022	CR024				
380 SEC	82-85	CR022	CR024				
380 SL-380 SLC	80->	CR014	CR013				
400 SERIES							
400 E (W124)	93->		CR033				
420 SERIES							
420 SEC - 420 SE	86-92	CR022	CR024				
420 SEL	86-92	CR022	CR024				
420 SL	85->	CR014	CR013				

follow MERCEDES

MODELLO MODEL	ANNO YEAR	ANT I FRONT INNER	ANT E FRONT OUTER	NOTE NOTES	POST I REAR INNER	POST E REAR OUTER	NOTE NOTES
450 SERIES							
450 SE -450 SEL	73-80	CR022	CR024				
450 SE -450 SEL	86-92	CR022	CR024				
450 SL-450 SLC	73-85	CR014	CR013				
500 SERIES							
500 E - 500 SL	89-93		CR033				
500 SE - 500 SEL	80-92	CR022	CR024				
500 SEC COUPE	82-92	CR022	CR024				
500 SEC-500 SE-SEL	86-92	CR022	CR024				
500 SL	85-88	CR014	CR013				
500 SL-500 SLC	80-85	CR014	CR013				
560 SERIES							
560 SE - 560 SEC COUPE	86-92	CR022	CR024				
560 SEL	86-92	CR022	CR024				
600 SERIES							
600 E	89-93		CR033				
600 SL (R129)	89-93		CR033				
A CLASS							
A 150 - A 160 CDI - A 170 - A 180 CDI	04-12	CR111		Single			
A 160 - A 180	09-12	CR111		Single			
A 200 - A 200 CDI	04-12	CR111		Single			
A 200 TURBO	05-12	CR111		Single			
E-CELL	10-12	CR111		Single			
B CLASS Sport Tourer							
B 150 - B 170 - B 180 CDI	05-11	CR111		Single			
B 160 - B 180	09-11	CR111		Single			
B 170 NGT - B 180 NGT	08-11	CR111		Single			
B 200 - B 200 CDI - B 200 TURBO	05-11	CR111		Single			

follow MERCEDES

MODELLO MODEL	ANNO YEAR	ANT I FRONT INNER	ANT E FRONT OUTER	NOTE NOTES	POST I REAR INNER	POST E REAR OUTER	NOTE NOTES
C CLASS							
180 - 200 - 220	93->		CR033				
200 D - 220 D - 250 D	93->		CR033				
250 - 280	93->		CR033				
C 180	00-02	CR112		Single			
C 180 CDI	10-14	CR112		Single			
C 180 CGI - C 200 CGI	07-14	CR112		Single			
C 180 Kompressor	02-14	CR112		Single			
C 200 CDI - C 200 Kompressor - C 220 CDI	00-14	CR112		Single			
C 200 CGI Kompressor - C 30 CDI AMG	03-07	CR112		Single			
C 230 - C 280 - C 320 CDI - C 350	05-14	CR112		Single			
C 230 Kompressor	04-07	CR112		Single			
C 240 - C 270 CDI - C 320	00-07	CR112		Single			
C 250 CDI - C 350 CGI	08-14	CR112		Single			
C 250 CGI - C 300 - C 350 CDI	09-14	CR112		Single			
C 32 AMG Kompressor	01-07	CR112		Single			
C 55 AMG	04-07	CR112		Single			
C CLASS Coupé							
C 180 - C 200 CGI - C 220 CDI	11->	CR112		Single			
C 250 - 250 CDI - C 350	11->	CR112		Single			
C CLASS Sportcoupé							
C 160 Kompressor - C 180 Kompressor	02-08	CR112		Single			
C 180	01-02	CR112		Single			
C 200 CDI - C 200 CGI Kompressor	03-08	CR112		Single			
C 200 Kompressor - C 220 CDI	01-08	CR112		Single			
C 230 - C 350	05-08	CR112		Single			
C 230 Kompressor	01-08	CR112		Single			
C 320 - C 30 CDI AMG	02-08	CR112		Single			

follow MERCEDES

MODELLO MODEL	ANNO YEAR	ANT I FRONT INNER	ANT E FRONT OUTER	NOTE NOTES	POST I REAR INNER	POST E REAR OUTER	NOTE NOTES
C CLASS T-Model							
C 180	01-02	CR112		Single			
C 180 CDI	11-14	CR112		Single			
C 180 CGI	09-14	CR112		Single			
C 180 Kompressor	02-14	CR112		Single			
C 200 CDI - C 200 Kompressor - C 220 CDI	01-14	CR112		Single			
C 200 CGI - C 300 - C 350 CDI	07-14	CR112		Single			
C 200 CGI Kompressor - C 30 CDI AMG	03-07	CR112		Single			
C 230 - C 280 - C 320 CDI - C 350	05-14	CR112		Single			
C 230 Kompressor	04-07	CR112		Single			
C 240 - C 270 CDI - C 320	01-07	CR112		Single			
C 250 CDI - C250 CGI	08-12	CR112		Single			
C 250 CDI - C250 CGI	09-14	CR112		Single			
C 32 AMG Kompressor	01-07	CR112		Single			
C 55 AMG	04-07	CR112		Single			
CLC CLASS							
CLC 160	09-11	CR112		Single			
CLC 180 Kompressor - CLC 200 CDI	08-11	CR112		Single			
CLC 200 Kompressor - CLC 220 CDI	08-11	CR112		Single			
CLC 230 - CLC 350	08-11	CR112		Single			
CLK CLASS							
200 - 320	97-98		CR033				
200 CGI	03-09	CR112		Single			
200 Kompressor - 240 - 270 CDI - 320	02-09	CR112		Single			
220 CDI - 280 - 320 CDI - 350	05-09	CR112		Single			
500 - 55 AMG	02-09	CR112		Single			
63 AMG	06-09	CR112		Single			
CLK CLASS Cabriolet							
CLK 200 Kompressor - CLK 240	03-10	CR112		Single			
CLK 280 - CLK 320 CDI - CLK 350	05-10	CR112		Single			
CLK 320 - CLK 500	03-10	CR112		Single			
CLK 55 AMG	02-10	CR112		Single			
CLK 63 AMG	06-10	CR112		Single			

follow MERCEDES

MODELLO MODEL	ANNO YEAR	ANT I FRONT INNER	ANT E FRONT OUTER	NOTE NOTES	POST I REAR INNER	POST E REAR OUTER	NOTE NOTES
E CLASS							
200 - 200 D	94->	CR014	CR013				
200 - 220	7.95->		CR033				
200 Cabrio-Coup,	93->	CR014	CR013				
220	94->	CR014	CR013				
220 Cabrio-Coup,	93->	CR014	CR013				
220 D - 250 D - 300 D	7.95->		CR033				
250D-250 TD	94->	CR014	CR013				
280	94->	CR014	CR013				
300-300D	93->	CR014	CR013				
320	7.95->		CR033				
320 Coup,	94->	CR014	CR013				
420 - 500	94->		CR033				
E CLASS Cabriolet							
E 200 CGI - E 220 CDI/BlueTEC /d	10-16	CR112		Single			
E 200 CGI - E 220 CDI/d	10-16	CR112		Single			
E 220 CDI	10-14	CR112		Single			
E 250 CDI/BlueTEC /d - E 250 CGI	10-16	CR112		Single			
E 250 CDI/BlueTEC/d - E 250 CGI - E 500	09-16	CR112		Single			
E 300	11-16	CR112		Single			
E 300	11-16	CR112		Single			
E 350	11-14	CR112		Single			
E 350	11-14	CR112		Single			
E 350 4-matic	13-16	CR112		Single			
E 350 CDI	09-13	CR112		Single			
E 350 CDI	10-13	CR112		Single			
E 350 CGI	10-14	CR112		Single			
E 350 CGI	09-11	CR112		Single			
E 500	10-11	CR112		Single			

follow MERCEDES

MODELLO MODEL	ANNO YEAR	ANT I FRONT INNER	ANT E FRONT OUTER	NOTE NOTES	POST I REAR INNER	POST E REAR OUTER	NOTE NOTES
MERCEDES VANS							
207D	78-90	CR022					
208	78-82	CR022					
208 D	90-94	CR022					
209 D	83-90	CR022					
210	83-94	CR022					
210 D	89-94	CR022					
307 D	78-90	CR022					
307 D	78-90	CR035					
308	78-82	CR022					
308 D	90->	CR022					
308 D	90-94	CR035					
309 D	83-90	CR022					
309 D	83-94	CR035					
310	83->	CR022					
310 D	89->	CR022					
310 D	89-94	CR035					
SLK							
200 - 230	96-98		CR033				
200 - 250	11->	CR112		Single			
200 Kompressor	04-11	CR112		Single			
250 CDI / d	12->	CR112		Single			
280	05-11	CR112		Single			
300	09-11	CR112		Single			
350 - 55 AMG	04->	CR112		Single			
SPRINTER 2 - t Autobus							
208 CDI	00-06	CR068					
208 D	95-00	CR068					
210 D	97-00	CR068					
211 CDI	00-06	CR068					
212 D	95-00	CR068					
213 CDI	00-06	CR068					
214	95-06	CR068					
214 NGT	00-06	CR068					
216 CDI	00-06	CR068					

follow MERCEDES

MODELLO MODEL	ANNO YEAR	ANT I FRONT INNER	ANT E FRONT OUTER	NOTE NOTES	POST I REAR INNER	POST E REAR OUTER	NOTE NOTES
SPRINTER 2 - t Furgonato							
208 CDI	00-06	CR068					
208 D	95-00	CR068					
210 D	97-00	CR068					
211 CDI	00-06	CR068					
212 D	95-00	CR068					
213 CDI	00-06	CR068					
214	95-06	CR068					
214 NGT	00-06	CR068					
216 CDI	00-06	CR068					
SPRINTER 2 - t Pianale piatto							
208 CDI	00-06	CR068					
208 D	95-00	CR068					
210 D	97-00	CR068					
211 CDI	00-06	CR068					
212 D	95-00	CR068					
213 CDI	00-06	CR068					
214	95-06	CR068					
214 NGT	00-06	CR068					
216 CDI	00-06	CR068					
SPRINTER 3 - t Autobus							
308 CDI	00-06	CR068					
308 D	95-00	CR068					
308 E	00-06	CR068					
310 D 4x4	97-02	CR068					
311 CDI	00-06	CR068					
312 D 2.9	95-00	CR068					
312 D 2.9 4x4	97-02	CR068					
313 CDI	00-06	CR068					
314	95-06	CR068					
314 NGT	00-06	CR068					
316 CDI	00-06	CR068					

follow MERCEDES

MODELLO MODEL	ANNO YEAR	ANT I FRONT INNER	ANT E FRONT OUTER	NOTE NOTES	POST I REAR INNER	POST E REAR OUTER	NOTE NOTES
SPRINTER 3 - t Furgonato							
308 CDI	00-06	CR068					
308 D 2.3	95-00	CR068					
310 D 2.9	95-00	CR068					
311 CDI	00-06	CR068					
312 D 2.9	95-00	CR068					
313 CDI	00-06	CR068					
314	95-06	CR068					
314 NGT	00-06	CR068					
316 CDI	00-06	CR068					
SPRINTER 3 - t Pianale piatto							
308 CDI	00-06	CR068					
308 D 2.3	95-00	CR068					
310 2.9	97-00	CR068					
311 CDI	00-06	CR068					
312 D 2.9	95-00	CR068					
313 CDI	00-06	CR068					
314	95-06	CR068					
314 NGT	00-06	CR068					
316 CDI	00-06	CR068					
SPRINTER 4 - t Autobus							
408 CDI	00-06	CR068					
408 CDI	00-06	CR068					
408 D	96-06	CR068					
410 D	96-06	CR068					
411 CDI	00-06	CR068					
411 CDI	00-06	CR068					
412 D	96-06	CR068					
413 CDI	00-06	CR068					
413 CDI	00-06	CR068					
414	96-06	CR068					
414	96-06	CR068					
416 CDI	00-06	CR068					
416 CDI	00-06	CR068					

follow MERCEDES

MODELLO MODEL	ANNO YEAR	ANT I FRONT INNER	ANT E FRONT OUTER	NOTE NOTES	POST I REAR INNER	POST E REAR OUTER	NOTE NOTES
SPRINTER 4 - t Pianale piatto							
408 CDI	00-06	CR068					
408 D	96-06	CR068					
410 D	96-06	CR068					
411 CDI	00-06	CR068					
412 D	96-06	CR068					
413 CDI	00-06	CR068					
414	96-06	CR068					
416 CDI	00-06	CR068					
SPRINTER 414							
Tutti i tipi/All types/Tous types	95-98	CR035					
T1 Autobus							
308 D 2.3	89-96	CR068					
310 D 2.9	89-96	CR068					
T1 Furgonato							
307 D 2.4	82-90	CR068					
308 D 2.3	88-96	CR068					
309 D 3.0	82-90	CR068					
310 D 2.9	89-96	CR068					
T1 Pianale piatto							
307 D 2.4	77-90	CR068					
308 D 2.3	89-96	CR068					
309 D 3.0	82-90	CR068					
310 D 2.9	89-96	CR068					

MG

MODELLO MODEL	ANNO YEAR	ANT I FRONT INNER	ANT E FRONT OUTER	NOTE NOTES	POST I REAR INNER	POST E REAR OUTER	NOTE NOTES
MG ZT							
1.8 16V - 1.8 T 16V	03-05	CR121		Single			
160 - 190 - T 160 - T 190	01-05	CR121		Single			
180 - 2.0 CDTi - T 180 - T 2.0 CDTi	02-05	CR121		Single			
T 1.8 16V - T 1.8 T 16V	03-05	CR121		Single			

MITSUBISHI							
MODELLO MODEL	ANNO YEAR	ANT I FRONT INNER	ANT E FRONT OUTER	NOTE NOTES	POST I REAR INNER	POST E REAR OUTER	NOTE NOTES
CELESTE							
1.6	->79	CR023	CR006				
2.0	81->	CR023	CR006				
COLT							
150-151-155-156						CR006	
GALANT							
1.6-Combi Autom.	75-83	CR023	CR006				
1.8 S/ABS	87-91				CR023	CR006	
1850-2.0	75-77	CR023	CR006				
2.0 - 2.3 TURBO	81->	CR014	CR013				
2.0-2.4	85-88				CR023	CR006	
GALANT SIGMA							
1.6-2.0	77-83	CR023	CR006				
2.0 BREAKS	78	CR023	CR006				
2.0 BREAKS	79-83	CR014	CR013				
GALANT SOPPORO							
1.6 -2.0	79-83	CR023	CR006				
2.0 TURBO	79-83	CR014	CR013				
L200							
(4x2)	81-90	CR022	CR024				
1.6-2.0 (4x2)	86-95	CR022	CR024				
2.4 (4x2)	86-95	CR022	CR024				
2.5 (4x2)	86-95	CR022	CR024				
2.6 (4x2)	86-95	CR022	CR024				
L300							
1.6-2.0	86-96	CR022	CR024				
2.4-2.5	86-96	CR022	CR024				
4x2	81-90	CR022	CR024				

follow MITSUBISHI

MODELLO MODEL	ANNO YEAR	ANT I FRONT INNER	ANT E FRONT OUTER	NOTE NOTES	POST I REAR INNER	POST E REAR OUTER	NOTE NOTES
LANCER							
1.2-1.4-1.4 TURBO	82-84				CR023	CR006	
1.2-1.4-1.6	75-82	CR023	CR006				
2.0 TURBO	80-82	CR014	CR013				
BREAKS	86-91				CR023	CR006	
SAPPORO							
1.6	81->		CR006				
2.0		CR014	CR013				
SPACE WAGON							
4WD (D08)	85-90	CR023	CR006				
D04-D05-D09	83-90	CR023	CR006				
STARION							
2.0	82-90	CR013	CR014				

NISSAN

MODELLO MODEL	ANNO YEAR	ANT I FRONT INNER	ANT E FRONT OUTER	NOTE NOTES	POST I REAR INNER	POST E REAR OUTER	NOTE NOTES
200							
SX	83-84	CR014	CR013				
300							
ZX	83-96	CR014	CR013				
ATLAS CABSTAR							
F22	82-89	CR022	CR024				
BLUEBIRD							
160B-180B	71-73	CR023	CR006				
160B-180B	73-76	CR014	CR013				
160B-180B-200B	76-83	CR014	CR013				
C20							
C120	79-82	CR014	CR013				

follow NISSAN							
MODELLO MODEL	ANNO YEAR	ANT I FRONT INNER	ANT E FRONT OUTER	NOTE NOTES	POST I REAR INNER	POST E REAR OUTER	NOTE NOTES
C21							
C120 D	79-82	CR014	CR013				
FAIRLADY							
280 ZX	79-84	CR014	CR013				
INTERSTAR Autobus							
dCi 90 - dCi 115 - dCi 80	02-06				CR115		Single
INTERSTAR Furgonato							
dCi 100 - dCi 140	03->				CR115		Single
dCi 120 - dCi 150	06->				CR115		Single
dCi 80	02-06				CR115		Single
dCi 90 - dCi 115	02->				CR115		Single
INTERSTAR Pianale piatto							
dCi 100	04->				CR115		Single
dCi 115 - dCi 140	03->				CR115		Single
dCi 120 - dCi 150	06->				CR115		Single
L35							
Tutti i tipi/All types/Tous types					CR051	CR051	
L45							
Tutti i tipi/All types/Tous types					CR051	CR051	
LAUREL							
Tutti i tipi/All types/Tous types	76-85	CR014	CR013				
LIBERTA							
T12	83-89				CR005	CR013	
MARCH							
Tutti i tipi/All types/Tous types	83-89				CR023	CR013	

follow NISSAN							
MODELLO MODEL	**ANNO YEAR**	**ANT I FRONT INNER**	**ANT E FRONT OUTER**	**NOTE NOTES**	**POST I REAR INNER**	**POST E REAR OUTER**	**NOTE NOTES**
MICRA							
Tutti i tipi/All types/Tous types	83-89				CR023	CR013	
1.0 16V - 1.2 16V - 1.4 16V	03->	CR076		Single			
1.5 DCI	03->	CR076		Single			
160 SR	05->	CR076		Single			
MICRA C+C							
1.4 16V - 1.6 160 SR	05->	CR076		Single			
NOTE							
1.4 - 1.5 DCI - 1.6	06->	CR076		Single			
NT500							
35.15, 35.15 HD	13->				CR106		Single
PRAIRIE							
Tutti i tipi/All types/Tous types	83-86				CR005	CR013	
PRIMASTAR Autobus							
2.0	01-06	CR117		Single			
dCi 100 - dCi 80	01->	CR117		Single			
dCi 120 - dCi 150 - dCi 90	06->	CR117		Single			
dCi 140	03->	CR117		Single			
PRIMASTAR Furgonato							
1.9 dCi 80 - 1.9 dCi 100	02->	CR117		Single			
2.0 - 2.5 dCi 140	03->	CR117		Single			
2.0 dCi 90 - 2.0 dCi 115 - 2.5 dCi 150	06->	CR117		Single			
PULSAR							
1.0-1.3	82-85				CR005	CR013	
1.5-1.7D	82-85				CR005	CR013	
4WD N13	86-89		CR052				
B12 - N13 (16V)	86-89		CR052				
SENTRA							
4WD B12	86-90		CR052				

follow NISSAN

MODELLO MODEL	ANNO YEAR	ANT I FRONT INNER	ANT E FRONT OUTER	NOTE NOTES	POST I REAR INNER	POST E REAR OUTER	NOTE NOTES
SILVIA							
Tutti i tipi/All types/Tous types	83-86	CR014	CR013				
180 SX	80-83	CR014	CR013				
SUNNY							
120Y-140Y-160Y	75-81	CR023	CR006				
4WD B12 - 4WD N13	86-90		CR052				
B12 - N13 - B12 16v - N13 16v	86-89		CR052				
URVAN							
E21-E23	82-87	CR022	CR024				
E24	87->	CR022	CR024				
VANETTE							
MOT LD 20	80->	CR014	CR013				
VIOLET							
140 J - 160 J FRENI DISCO	79-81	CR023	CR006				
140 J -160 J	73-75	CR023	CR006				
140 J -160 J	75-78	CR014	CR013				
140 J -160 J - 160 JSSS	75-81	CR014	CR013				
160 J	73-75	CR023	CR006				

NSU

MODELLO MODEL	ANNO YEAR	ANT I FRONT INNER	ANT E FRONT OUTER	NOTE NOTES	POST I REAR INNER	POST E REAR OUTER	NOTE NOTES
110							
110S-110SC			CR006				
1200							
1200-1200C			CR006				

OPEL

MODELLO MODEL	ANNO YEAR	ANT I FRONT INNER	ANT E FRONT OUTER	NOTE NOTES	POST I REAR INNER	POST E REAR OUTER	NOTE NOTES
ADMIRAL							
Tutti i tipi/All types/Tous types	69-77	CR014	CR013				

follow OPEL

MODELLO MODEL	ANNO YEAR	ANT I FRONT INNER	ANT E FRONT OUTER	NOTE NOTES	POST I REAR INNER	POST E REAR OUTER	NOTE NOTES
AGILA							
1.0	03-07	CR113		Single			
1.0 12V - 1.2 16V	00-07	CR113		Single			
1.2 16V Twinport	04-07	CR113		Single			
ASCONA							
1.2-1.6	->75	CR023	CR006				
1.6S-1.9-Voyage	->75	CR023	CR006				
B 1.2-1.6	75	CR005	CR006				
B 1.6S-1.9	75->	CR005	CR006				
B 2.0 S,E,GTE	75->	CR005	CR006				
C 1.3	81-88	CR008		Single	CR005	CR006	
C 1.6-1.8	82-88	CR012		Single	CR005	CR006	
ASTRA							
1.4-1.6	92-98	CR021		Single			
1.4i-1.6	91-93	CR008		Single			
1.4i-1.6i	93->	CR012		Single			
1.7 D-1.7 TD	91->	CR012		Single			
1.8i-2.0i 16v	92->	CR012		Single			
Cabrio 1.4-1.6	93->	CR008		Single			
Cabrio 1.4-1.6	94->	CR012		Single			
Cabrio 1.8-2.0	93->	CR012		Single			
Classic	99->	CR021		Single			
ASTRA F							
1.7 D-1.7 TD-1.7 TDS-1.8 i	92-98	CR073		Single			
1.8 i 16V	93-98	CR073		Single			
2.0 i	92-98	CR073		Single			
2.0 i 16V	95-98	CR073		Single			
ASTRA F 2 Volumi							
1.7 D - 1.7 TDS - 1.8 i	91-98	CR073		Single			
1.7 TD	94-98	CR073		Single			
1.8 i 16V	93-98	CR073		Single			
2.0 GSI 16V - 2.0 i	91-98	CR073		Single			
2.0 i 16V	95-98	CR073		Single			

follow OPEL							
MODELLO MODEL	ANNO YEAR	ANT I FRONT INNER	ANT E FRONT OUTER	NOTE NOTES	POST I REAR INNER	POST E REAR OUTER	NOTE NOTES
ASTRA F Cabriolet							
1.8 i 16V	94-01	CR073		Single			
2.0 i	93-94	CR073		Single			
ASTRA F Station Wagon							
1.7 D - 1.7 TDS - 1.8 i	91-98	CR073		Single			
1.7 TD	94-98	CR073		Single			
1.8 i 16V	93-98	CR073		Single			
2.0 i	91-94	CR073		Single			
2.0 i 16V	93-98	CR073		Single			
CALIBRA							
2.0	89->	CR012		Single			
4x4	90->	CR012		Single			
CALIBRA A							
2.0 i - 2.0 i 4x4	90-97	CR073		Single			
2.0 i 16V - 2.0 i 16V 4x4	90-97	CR073		Single			
2.0 i Turbo 4x4	92-97	CR073		Single			
CHEVETTE							
Tutti i tipi/All types/Tous types	75-76	CR023					
COMBO Cassone							
1.3 CDTI - 1.4 - 1.6 CDTI	12->	CR101		Single			
1.3 CDTI 16V	05-12	CR114		Single			
1.4 16V - 1.6 CNG 16V	05->	CR114		Single			
1.6 - 1.7 DI 16V - 1.7 DTI 16V	01->	CR114		Single			
1.6 CDTI - 2.0 CDTI	12->	CR104		Single			
COMBO Tour							
1.3 CDTI - 1.4 - 1.6 CDTI	12->	CR101		Single			
1.3 CDTI 16V - 1.4	04-11	CR114		Single			
1.6	01-06	CR114		Single			
1.6 CNG	05-11	CR114		Single			
1.7 DI 16V - 1.7 DTI 16V	01-06	CR114		Single			

follow OPEL

MODELLO MODEL	ANNO YEAR	ANT I FRONT INNER	ANT E FRONT OUTER	NOTE NOTES	POST I REAR INNER	POST E REAR OUTER	NOTE NOTES
COMMODORE							
A	67-72	CR014	CR013				
B	72-77	CR014	CR013				
C	78->	CR014	CR013				
CORSA							
1.0-1.2-1.3	83->	CR008		Single	CR005	CR006	
1.2i-1.4i-1.5D	90->	CR008		Single	CR005	CR006	
1.6i	90->	CR012		Single	CR005	CR006	
SOUTH AMERICA		CR072		Single			
CORSA B							
B	93->	CR021		Single	CR005	CR006	
B	94->	CR021		Single	CR014	CR013	
CORSA C							
Tutti i tipi/All types/Tous types	00->				CR054		Single
1.0 - 1.2 - 1.4 - 1.7 DI - 1.7 DTI - 1.8	00-09	CR114		Single			
1.2 Twinport	04-09	CR114		Single			
1.3 CDTI - 1.4 Twinport	03-09	CR114		Single			
CORSA C Cassone							
1.2 - 1.3 CDTI	05-06	CR114		Single			
1.2 16V - 1.7 DI 16V - 1.7 DTI 16V	00-03	CR114		Single			
1.4	03-12	CR114		Single			
DIPLOMAT							
V8	64-77	CR014	CR013				
KADET							
B-C	->75	CR023	CR006				
C (1.0-1.2-1.6-1.9-2.0)	76-79	CR005	CR006				
C (Freni a Disco)	75	CR005	CR006				
CABRIOLET 1.4-1.6	85-92	CR008		Single	CR005	CR006	
CABRIOLET 1.6S-2.0	85-92	CR012		Single	CR005	CR006	
COMBO	86-91	CR012		Single	CR014	CR013	
D-E (1.2-1.3)	80->	CR008		Single	CR005	CR006	
D-E (1.6-1.8)	82->	CR012		Single	CR005	CR006	

follow OPEL							
MODELLO MODEL	**ANNO YEAR**	**ANT I FRONT INNER**	**ANT E FRONT OUTER**	**NOTE NOTES**	**POST I REAR INNER**	**POST E REAR OUTER**	**NOTE NOTES**
KAPITAN							
Tutti i tipi/All types/Tous types	64-70	CR014	CR013				
MANTA							
1.2-1.6	->75	CR023	CR006				
1.6S-1.9	->75	CR023	CR006				
B 1.2-1.6	75	CR005	CR006				
B 1.6S-1.9	75->	CR005	CR006				
B 2.0 S,E,GTE	75->	CR005	CR006				
MERIVA A MPV							
1.3 CDTI - 1.6 - 1.7 DTI - 1.8	03-10	CR114		Single			
1.4 16V Twinport - 1.4 16V Twiport LPG	04-10	CR114		Single			
1.6 16V	03-06	CR114		Single			
MONZA							
Tutti i tipi/All types/Tous types	78-87	CR014	CR013				
MOVANO Autobus							
1.9 DTI - 2.2 DTI	00->				CR115		Single
2.5 CDTI	06->				CR115		Single
2.5 D	98-00				CR115		Single
2.5 DTI	01->				CR115		Single
2.8 DTI	98-01				CR115		Single
3.0 DTi	03->				CR115		Single
MOVANO Furgonato							
1.9 DTI - 2.2 DTI	00->				CR115		Single
2.5 CDTI - 3.0 DTI	03->				CR115		Single
2.5 D	99-00				CR115		Single
2.5 DTI	01->				CR115		Single
2.8 DTI	99-01				CR115		Single

follow OPEL

MODELLO MODEL	ANNO YEAR	ANT I FRONT INNER	ANT E FRONT OUTER	NOTE NOTES	POST I REAR INNER	POST E REAR OUTER	NOTE NOTES
MOVANO Pianale piatto							
2.2 DTI	00->				CR115		Single
2.5 CDTI	06->				CR115		Single
2.5 D	98-00				CR115		Single
2.5 DTI	01->				CR115		Single
2.8 DTI	98-01				CR115		Single
3.0 DTI	03->				CR115		Single
MOVANO Ribaltabile							
2.2 DTI	00->				CR115		Single
2.5 CDTI	06->				CR115		Single
2.5 D	99-00				CR115		Single
2.5 DTI - 3.0 DTI	03->				CR115		Single
2.8 DTI	99-01				CR115		Single
OLYMPIA							
A	68-70	CR023	CR006				
OMEGA							
Tutti i tipi/All types/Tous types	86->				CR012		Single
OMEGA B							
2.0	94-00	CR073		Single			
2.0 16V	94-99	CR073		Single			
2.0 DTI 16V	97-00	CR073		Single			
2.2 16V	99-03	CR073		Single			
2.2 DTI 16V	00-03	CR073		Single			
2.5 DTI	01-03	CR073		Single			
2.5 TD	94-03	CR073		Single			
2.5 V6	94-00	CR073		Single			
2.6 V6	00-03	CR073		Single			
3.0 V6	94-01	CR073		Single			
3.2 V6	01-03	CR073		Single			
REKORD							
B-C	66->	CR023	CR006				
D	72->	CR005	CR006				
E	78-86	CR005	CR006				
E (Berlina e Diesel)	78-86	CR014	CR013				

follow OPEL							
MODELLO MODEL	ANNO YEAR	ANT I FRONT INNER	ANT E FRONT OUTER	NOTE NOTES	POST I REAR INNER	POST E REAR OUTER	NOTE NOTES
SENATOR							
A	78-87	CR014	CR013				
TIGRA							
Tutti i tipi/All types/Tous types	94->	CR021		Single	CR005	CR006	
TIGRA TwinTop							
1.3 CDTI - 1.4 - 1.8	04-10	CR114		Single			
VECTRA							
1.4-1.6	89-93	CR008		Single	CR005	CR006	
1.6i-1.8i-2.0i-1.7TD	90->	CR012		Single	CR005	CR006	
2.0i - 2.0 Turbo 4x4	90->	CR012		Single			
A 1.6	94->	CR021		Single	CR005	CR006	
VECTRA A							
2.5 V6	93-95	CR073		Single			
2.5 V6 2 Volumi	93-95	CR073		Single			
VECTRA B							
2.2 DTI 16V - 2.2 i 16V	00-02	CR073		Single			
VECTRA B Station Wagon							
2.2 DTI 16V - 2.2 i 16V	00-03	CR073		Single			
VIVARO A Autobus							
1.9 DI - 1.9 DTI - 2.0 16V	01->	CR117		Single			
2.0 CDTI - 2.0 ECOTEC - 2.5 CDTI	06->	CR117		Single			
2.5 DTI	03->	CR117		Single			
VIVARO A Furgonato							
1.9 DI - 1.9 DTI - 2.0 16V	01->	CR117		Single			
2.0 CDTI - 2.0 ECOTEC - 2.5 CDTI	06->	CR117		Single			
2.5 DTI	03->	CR117		Single			

follow OPEL

MODELLO MODEL	ANNO YEAR	ANT I FRONT INNER	ANT E FRONT OUTER	NOTE NOTES	POST I REAR INNER	POST E REAR OUTER	NOTE NOTES
VIVARO A Pianale piatto							
1.9 DI	01->	CR117		Single			
1.9 DTI2.0 CDTI - 2.0 ECOTEC - 2.5 CDTI	06->	CR117		Single			
2.5 DTI - 2.0 16V	03->	CR117		Single			

PEUGEOT

MODELLO MODEL	ANNO YEAR	ANT I FRONT INNER	ANT E FRONT OUTER	NOTE NOTES	POST I REAR INNER	POST E REAR OUTER	NOTE NOTES
1007							
1.4 - 1.4 16V - 1.4 Hdi - 1.6 16V	05->				CR092		Single
1.6 Hdi	07->				CR092		Single
106 II							
1.0 i - 1.6 i	96-01	CR095		Single			
1.1 i - 1.4 i - 1.5 D - 1.6 S16	96-04	CR095		Single			
Elecrtic	96-04	CR095		Single			
106 Van II Cassone							
1.0 i - 1.5 D	96-01	CR095		Single			
107							
1.0 - 1.4 HDi	05-14	CR122		Single			
108							
1.0 VTi 68 - 1.0 VTi 82	14->	CR122		Single			
1.0 VTi 72	18->	CR122		Single			
2008							
1.2 VTI - 1.4 HDI	13->	CR084		Single	CR086		Single
1.6 HDI - 1.6 VTI	13->	CR084		Single	CR086		Single
206 +							
1.1 -1.4 Hdi eco 70 - 1.4 i	09-13	CR095		Single			

follow PEUGEOT

MODELLO MODEL	ANNO YEAR	ANT I FRONT INNER	ANT E FRONT OUTER	NOTE NOTES	POST I REAR INNER	POST E REAR OUTER	NOTE NOTES
206 2 volumi							
1.1 - 1.6 i	96-01	CR095		Single			
1.1 i	98-07	CR095		Single			
1.4 16V	03-08	CR095		Single			
1.4 Hdi eco 70	01-09	CR095		Single			
1.4 LPG	06-07	CR095		Single			
1.9 D	98-01	CR095		Single			
206 SW							
1.1 - 1.4 - 1.4 Hdi	02-07	CR095		Single			
1.4 16V	03->	CR095		Single			
206 Tre volumi							
1.4 - 1.6 16V	07->	CR095		Single			
1.4 Hdi eco 70	08->	CR095		Single			
206 Van							
1.4 Hdi	01-09	CR095		Single			
207							
1.4 - 1.4 16V	06->	CR084		Single	CR086		Single
1.4 - 1.4 16V	06-13	|			CR092		Single
1.4 - 1.4 Hdi	06-15	CR093		Single	|		
1.4 16V - 1.6 16V	06-13	CR093		Single	|		
1.4 HDI	06-15	|			CR092		Single
1.4 HDI - 1.6 16V	06->	CR084		Single	CR086		Single
1.6 16V RC	07->	CR084		Single	CR086		Single
1.6 16V RC - 1.6 16V Vti	07-12	CR093		Single	|		
1.6 16V Turbo	06->	CR084		Single	CR086		Single
1.6 16V VTI	07->	CR084		Single	CR086		Single
1.6 HDI	06->	CR084		Single	CR086		Single
1.6 Hdi	06-13	CR093		Single	|		
1.6 HDI 110	09->	CR084		Single	CR086		Single
207 CC							
1.6 16V - 1.6 16V Turbo	07->	CR084		Single	CR086		Single
1.6 16V - 1.6 16V Turbo	07-13	CR093		Single	|		
1.6 HDI	07->	CR084		Single	CR086		Single
1.6 HDI	07-13	CR093		Single	|		

follow PEUGEOT

MODELLO MODEL	ANNO YEAR	ANT I FRONT INNER	ANT E FRONT OUTER	NOTE NOTES	POST I REAR INNER	POST E REAR OUTER	NOTE NOTES
207 SW							
1.4	07-12				CR092		Single
1.4 - 1.4 16V - 1.6 16V	07->	CR084		Single	CR086		Single
1.4 - 1.4 16V - 1.6 16V	07-13	CR093		Single			
1.6 16V RC - 1.6 HDI	07->	CR084		Single	CR086		Single
1.6 16V RC - 1.6 HDI	07-12	CR093		Single			
207+							
1.4 - 1.4 16V	06-13				CR092		Single
1.4 - 1.4 Hdi	06-15	CR093		Single			
1.4 16V - 1.6 16V	06-13	CR093		Single			
1.4 HDI	06-15				CR092		Single
1.6 16V RC - 1.6 16V Vti	07-12	CR093		Single			
1.6 Hdi	06-13	CR093		Single			
208							
1.0 - 1.2 - 1.4 - 1.4 HDI	12->	CR084		Single	CR086		Single
1.0 - 1.2 Vti 82 - 1.4 HDI - 1.4 Vti	12->				CR094		Single
1.2 PureTech 82 - 1.5 BlueHDi 100	18->				CR094		Single
1.2 THP 110 - 1.6 BlueHDi 120	13->				CR094		Single
1.2 Vti 68 / PureTech 68	16->				CR094		Single
1.6 - 1.6 GTI - 1.6 HDI	12->	CR084		Single	CR086		SIngle
1.6 - 1.6 GTI - 1.6 HDI	12->				CR094		Single
1.6 BlueHDi 100 - 1.6 THP 165	15->				CR094		Single
1.6 Hdi / BlueHDi 75	13->				CR094		Single
208 Cassone							
1.4 Hdi 68	12->				CR094		Single
1.6 BlueHDi 75	15->				CR094		Single
3008							
1.6 HDI - 1.6 THP - 1.6 VTI	09->	CR084		Single	CR085		Single
1.6 HDI - 1.6 THP - 1.6 VTI	09-16	CR093		Single			
2.0 HDI	09->	CR084		Single	CR085		Single
2.0 HDI - 2.0 Hdi 150/BlueHDi 150	09-16	CR093		Single			
2.0 HDI Hybrid4	11->	CR084		Single			
301							
1.2 Vti 82 - 1.6 BlueHDi 100	14->				CR094		Single

follow PEUGEOT

MODELLO MODEL	ANNO YEAR	ANT I FRONT INNER	ANT E FRONT OUTER	NOTE NOTES	POST I REAR INNER	POST E REAR OUTER	NOTE NOTES
306							
1.1 -1.4 SL	94-01	CR095		Single			
1.6	00-01	CR095		Single			
1.6 SR	94-00	CR095		Single			
306 2 volumi							
1.1 - 1.4 - 1.6	93-01	CR095		Single			
306 Break							
1.4	97-02	CR095		Single			
1.6	97-00	CR095		Single			
306 Cabriolet							
1.6	96-02	CR095		Single			
307							
1.4	00->	CR084		Single	CR086		Single
1.4	00-03	|			CR096		Single
1.4 16V	03->	CR084		Single	CR086		Single
1.4 16V - 2.0 Hdi 135	03-07	|			CR096		Single
1.4 HDI	01->	CR084		Single	CR086		Single
1.4 HDI	01-05	|			CR096		Single
1.6 16V	00->	CR084		Single	CR086		Single
1.6 16V - 2.0 Hdi 110 - 2.0 Hdi 90	00-07	CR093		Single	|		
1.6 16V - 2.0 Hdi 110 - 2.0 Hdi 90	00-07	|			CR096		Single
1.6 HDI	05->	CR084		Single	CR086		Single
1.6 HDI	05-09	CR093		Single	|		
1.6 HDI	05-09	|			CR096		Single
1.6 HDI 110	04->	CR084		Single	CR086		Single
1.6 HDI 110	04-09	CR093		Single	|		
1.6 HDI 110	04-09	|			CR096		Single
2.0 16V	00->	CR084		Single	CR086		Single
2.0 16V	00-07	CR093		Single	|		
2.0 16V	00-07	|			CR096		Single
2.0 HDI 110	00->	CR084		Single	CR086		Single
2.0 HDI 135	03->	CR084		Single	CR086		Single
2.0 HDI 135	03-07	CR093		Single	|		
2.0 HDI 90	00->	CR084		Single	CR086		Single

follow PEUGEOT

MODELLO MODEL	ANNO YEAR	ANT I FRONT INNER	ANT E FRONT OUTER	NOTE NOTES	POST I REAR INNER	POST E REAR OUTER	NOTE NOTES
307 Break							
1.4	02-03				CR096		Single
1.4 16V	03->	CR084		Single	CR086		Single
1.4 16V	03-07				CR096		Single
1.4 HDI - 1.6 16V	02->	CR084		Single	CR086		Single
1.4 HDI - 2.0	02-05				CR096		Single
1.6 16V - 2.0 Hdi 90	02-08	CR093		Single			
1.6 16V - 2.0 Hdi 90	02-08				CR096		Single
1.6 HDI	05->	CR084		Single	CR086		Single
1.6 HDI	05-08	CR093		Single			
1.6 HDI	05-08				CR096		Single
1.6 HDI 110	04->	CR084		Single	CR086		Single
1.6 HDI 110 - 2.0 Hdi 135	04-08	CR093		Single			
1.6 HDI 110 - 2.0 Hdi 135	04-08				CR096		Single
2.0	02->	CR084		Single	CR086		Single
2.0	02-05	CR093		Single			
2.0 16V	05->	CR084		Single	CR086		Single
2.0 16V	05-08	CR093		Single			
2.0 16V	05-08				CR096		Single
2.0 HDI 110	02->	CR084		Single	CR086		Single
2.0 HDI 110	02->	CR093		Single			
2.0 HDI 110	02-09				CR096		Single
2.0 HDI 135	04->	CR084		Single	CR086		Single
2.0 HDI 90	02->	CR084		Single	CR086		Single
307 CC							
1.6 16V	05->	CR084		Single	CR086		Single
1.6 16V - 2.0 16V	03-09	CR093		Single			
1.6 16V - 2.0 16V	03-09				CR096		Single
2.0 16V	03->	CR084		Single	CR086		Single
2.0 HDI 135	05->	CR084		Single	CR086		Single
2.0 HDI 135	05-09	CR093		Single			
2.0 HDI 135	05-09				CR096		Single

follow PEUGEOT

MODELLO MODEL	ANNO YEAR	ANT I FRONT INNER	ANT E FRONT OUTER	NOTE NOTES	POST I REAR INNER	POST E REAR OUTER	NOTE NOTES
307 SW							
1.4 16V	03->	CR084		Single	CR086		Single
1.4 16V	03-07	|			CR096		Single
1.4 HDI 70	02-05	CR084		Single	CR086		Single
1.6 16V	02->	CR084		Single	CR086		Single
1.6 16V - 2.0 Hdi 90 - 2.0 16V	02-08	CR093		Single	|		
1.6 16V - 2.0 Hdi 90 - 2.0 16V	02-08	|			CR096		Single
1.6 HDI 110	04->	CR084		Single	CR086		Single
1.6 HDI 110	03-07	CR093		Single	|		
1.6 HDI 110	03-07	|			CR096		Single
2.0 16V	02->	CR084		Single	CR086		Single
2.0 HDI 110	02->	CR084		Single	CR086		Single
2.0 HDI 110	02-09	CR093		Single	|		
2.0 HDI 110	02-09	|			CR096		Single
2.0 HDI 135	04->	CR084		Single	CR086		Single
2.0 HDI 135	04-08	CR093		Single	|		
2.0 HDI 135	04-08	|			CR096		Single
2.0 HDI 90	02->	CR084		Single	CR086		Single
308							
1.4 16V - 1.6 16V	07->	CR084		Single	CR085		Single
1.4 16V - 1.6 16V	07-14	CR093		Single	|		
1.6 BioFlex	08->	CR084		Single	CR085		Single
1.6 BioFlex	08-14	CR093		Single	|		
1.6 GTi	10-14	CR093		Single	|		
1.6 HDI	07->	CR084		Single	CR085		Single
1.6 HDI - 2.0 Hdi	07-14	CR093		Single	|		
1.6 THP 16V	09-14	CR093		Single	|		
2.0 HDI	07->	CR084		Single	CR085		Single
308 CC							
1.6 16V - 1.6 HDI - 2.0 HDI	09->	CR084		Single	CR085		Single
1.6 16V - 1.6 HDI - 2.0 HDI	09-14	CR093		Single	|		
1.6 THP	10-14	CR093		Single	|		
308 SW							
1.4 16V - 1.6 16V	07->	CR084		Single	CR085		Single
1.4 16V - 1.6 16V	07-14	CR093		Single	|		
1.6 Bioflex	09->	CR084		Single	CR085		Single
1.6 HDI - 2.0 HDI	07->	CR084		Single	CR085		Single
1.6 HDI - 2.0 HDI	07-14	CR093		Single	|		
1.6 THP 16V	07-14	CR093		Single	|		

follow PEUGEOT

MODELLO MODEL	ANNO YEAR	ANT I FRONT INNER	ANT E FRONT OUTER	NOTE NOTES	POST I REAR INNER	POST E REAR OUTER	NOTE NOTES
5008							
1.6 16V - 1.6 HDI - 2.0 HDI	09->	CR084		Single	CR085		Single
5009							
1.6 16V - 1.6 HDI	09-17	CR093		Single			
2.0 HDI - 2.0 Hdi 15 /BlueHDi 150	09-17	CR093		Single			
BOXER Autobus							
1.9 D - 1.9 TD - 2.0 i - 2.5 D - 2.5 TD	94-02	CR097		Single			
1.9 D - 1.9 TD - 2.0 i - 2.5 D - 2.5 TD	94-02				CR127		Single
1.9 TD 4x4 - 2.0 i 4x4	96-02	CR097		Single			
2.0 - 2.0 Hdi - 2.2 Hdi	02->				CR127		Single
2.0 - 2.0 Hdi - 2.2 Hdi - 2.8 Hdi 4x4	02->	CR097		Single			
2.2 HDi 100 - 2.2 HDi 120 - 3.0 HDi 160	06->	CR098		Single			
2.2 HDi 110 - 2.2 HDi 130	11->	CR098		Single			
2.2 HDi 150 - 3.0 HDi 180	11->	CR098		Single			
2.5 D 4x4 - 2.5 TD 4x4	96-02	CR097		Single			
2.5 TDI	97-02				CR127		Single
2.5 TDI - 2.5 TDI 4x4	97-02	CR097		Single			
2.8 D	99-02	CR097		Single			
2.8 D	99-02				CR127		Single
2.8 HDI	00-02				CR127		Single
2.8 Hdi	04-06	CR097		Single			
2.8 Hdi	00-06				CR127		Single
2.8 HDI - 2.8 Hdi 4x4	00-02	CR097		Single			
3.0 HDi 145	10->	CR098		Single			

follow PEUGEOT

MODELLO MODEL	ANNO YEAR	ANT I FRONT INNER	ANT E FRONT OUTER	NOTE NOTES	POST I REAR INNER	POST E REAR OUTER	NOTE NOTES
BOXER Furgonato							
1.9 D - 1.9 TD - 2.0 i - 2.5 D - 2.5 TD	94-02	CR097		Single			
1.9 D - 1.9 TD - 2.0 i - 2.5 D - 2.5 TD	94-02				CR127		Single
1.9 TD 4x4	96-02	CR097		Single			
2.0 - 2.0 HDi 2.2 HDi	02->				CR127		Single
2.0 - 2.2 Hdi	02->	CR097		Single			
2.0 Hdi	01->	CR097		Single			
2.0 HDI	01-02				CR127		Single
2.2 HDi 100 - 2.2 HDi 120	06->	CR098		Single			
2.2 HDi 110 - 2.2 HDi 130	11->	CR098		Single			
2.2 HDi 150 - 3.0 HDi 175	11->	CR098		Single			
2.5 D 4x4 - 2.5 TDI 4x4 - 2.8 D	99-02	CR097		Single			
2.5 DT	97-01	CR097		Single			
2.5 TDI	97-02	CR097		Single			
2.5 TDI	97-02				CR127		Single
2.8 D	99-02				CR127		Single
2.8 HDI	00-02				CR127		Single
2.8 HDi	00->				CR127		Single
2.8 HDI - 2.8 Hdi 4x4	00->	CR097		Single			
3.0 HDi - 3.0 HDi 160	10->	CR098		Single			
3.0 HDi 145	10->	CR098		Single			
BOXER Pianale piatto							
1.9 TD - 2.0 i - 2.5 D - 2.5 TD	94-02	CR097		Single			
1.9 TD - 2.0 i - 2.5 D - 2.5 TD	94-02				CR127		Single
2.0 HDi - 2.2 HDi	02->				CR127		Single
2.0 HDi - 2.2 HDi - 2.8 Hdi 4x4	02->	CR097		Single			
2.2 HDi 100 - 2.2 HDi 120	06->	CR098		Single			
2.2 HDi 110 - 2.2 HDi 130	11->	CR098		Single			
2.2 HDi 150 - 3.0 HDi 175	11->	CR098		Single			
2.5 D 4x4 - 2.5 TDI 4x4 - 2.8 D	99-02	CR097		Single			
2.5 TDI	97-02	CR097		Single			
2.8 D	97-02				CR127		Single
2.8 HDI	00->	CR097		Single			
2.8 HDI	00->				CR127		Single
2.8 HDi	00-02				CR127		Single
3.0 HDi - 3.0 HDi 160	10->	CR098		Single			
3.0 HDi 145	10->	CR098		Single			
PARTNER Cassone							
1.6 - 1.6 Hdi - 1.6 Hdi 16V	08->	CR093		Single			

follow PEUGEOT

MODELLO MODEL	ANNO YEAR	ANT I FRONT INNER	ANT E FRONT OUTER	NOTE NOTES	POST I REAR INNER	POST E REAR OUTER	NOTE NOTES
PARTNER TEPEE							
1.6 Hdi - 1.6 Hdi 16V - 1.6 Vti	08->	CR093		Single			
1.6 Hdi 90	10->	CR093		Single			
RANCH							
1.6 - 1.6 HDI	08->	CR084		Single	CR085		Single
1.6 HDI 90	10->	CR084		Single	CR085		Single
RANCH Furgonato							
1.6	08->	CR084		Single	CR085		Single
1.6 HDI	13->	CR084		Single	CR085		Single
1.6 HDI 90	10->	CR084		Single	CR085		Single
Electrique	13->	CR084		Single	CR085		Single
RANCH RCZ							
1.6 16V	10->	CR084		Single			
1.6 THP 270	13->	CR084		Single			
2.0 HDI	10->	CR084		Single			

PEUGEOT / TALBOT / SIMCA

MODELLO MODEL	ANNO YEAR	ANT I FRONT INNER	ANT E FRONT OUTER	NOTE NOTES	POST I REAR INNER	POST E REAR OUTER	NOTE NOTES
1.100 TALBOT							
All models	68-78	CR037		Single			
104							
Tutti i tipi/All types/Tous types	72-80				CR048		
Tutti i tipi/All types/Tous types	80-88				CR048	CR028	
106							
1.0-1.1 (Con 3 Fori di Montaggio)	91-99	CR018		Single	CR042		Single
1.0-1.1-1.4	91->	CR018		Single	CR025		Single
1.3	94->	CR018		Single	CR025		Single
1.4 D	92-94				CR025		Single
1.5 D	94->				CR025		Single
1.5 D	96->	CR062		Single			
1.6	94->	CR018		Single			
1.6	95->	CR018		Single	CR025		Single

follow PEUGEOT / TALBOT / SIMCA

MODELLO MODEL	ANNO YEAR	ANT I FRONT INNER	ANT E FRONT OUTER	NOTE NOTES	POST I REAR INNER	POST E REAR OUTER	NOTE NOTES
1307 TALBOT							
(1508)	76-78	CR037		Single			
1308 TALBOT							
(1508)	76-78	CR037		Single			
204							
All models	65-76	CR037		Single			
Diesel	68-76	CR037		Single			
205							
1.0-1.1-1.2	83->	CR018		Single	CR025		Single
1.1-1.3	88->	CR018		Single	CR025		Single
1.6 C/ABS	85->	CR040		Single			
1.6 S/ABS	85->	CR018		Single	CR025		Single
1.7 D - 1.9 D C/ABS	85->	CR040		Single	CR025		Single
1.7 D - 1.9 D S/ABS	85->	CR018		Single	CR025		Single
GENTRY 1.9 C/ABS	91->	CR040		Single			
GENTRY 1.9 S/ABS	91->	CR018		Single	CR025		Single
GTI S/ABS -C/ABS	87->	CR040		Single			
206							
1.1 - 1.4 - 1.6	98->				CR025		Single
1.9 D	98->				CR025		Single
1.9 TD	98->	CR040		Single			
2.0 16v	98->	CR040		Single			
206 (2A/C)							
1.6 i	98-00	CR062		Single			
1.9 D	98-01	CR062		Single			
206 SW (2E/K)							
1.1 - 1.4	02->	CR062		Single			
1.4 16V	03->	CR062		Single			
304							
All models	69-80	CR037		Single			

follow PEUGEOT / TALBOT / SIMCA

MODELLO MODEL	ANNO YEAR	ANT I FRONT INNER	ANT E FRONT OUTER	NOTE NOTES	POST I REAR INNER	POST E REAR OUTER	NOTE NOTES
305							
Tutti i tipi/All types/Tous types	78-82	CR037		Single			
Tutti i tipi/All types/Tous types	84->	CR040		Single			
306							
1,1	94->	CR062		Single			
1,6	00->	CR062		Single			
1.4 ENTREPRISE	95->	CR018		Single	CR025		Single
1.4 S/ABS	93->	CR018		Single	CR025		Single
1.4-1.6-1.8-2.0	93->	CR040		Single	CR025		Single
1.6-1.8 ENTREPRISE	93-95	CR040		Single			
1.6-1.8 ENTREPRISE	95->	CR040		Single	CR025		Single
2,0	97->	CR062		Single			
Diesel-Turbo Diesel	93->	CR040		Single	CR025		Single
306 2 VOLUMI							
1,1 - 1,4	93->	CR062		Single			
1,6	93-00	CR062		Single			
1,8	93->	CR062		Single			
306 BREAK							
1,4	97->	CR062		Single			
1,6 - 1,8 - 2,0	97->	CR062		Single			
306 CABRIOLET							
1,6	96-00	CR062		Single			
1,8 - 2,0	94->	CR062		Single			
309							
1.1-1.3-1.4-1.5-1.8	86->	CR040		Single	CR025		Single
GT-GTI-Diesel-TD	87->	CR040		Single	CR025		Single
405							
4x4	89->	CR040		Single	CR040		Single
XR-XS-GR-SX	87-92	CR040		Single			
406							
Tutti i tipi/All types/Tous types	95->	CR040		Single			

follow PEUGEOT / TALBOT / SIMCA

MODELLO MODEL	ANNO YEAR	ANT I FRONT INNER	ANT E FRONT OUTER	NOTE NOTES	POST I REAR INNER	POST E REAR OUTER	NOTE NOTES
504							
Tutti i tipi/All types/Tous types	76-85		CR048				
CAMIONETTE	80-90		CR048				
505							
Berlina-Familare-Break	79-92		CR048				
604							
Tutti i tipi/All types/Tous types	75-87		CR048				
806 (221)							
1.8 - 1.9 TD	95-02	CR063		Single			
2.0	94-02	CR063		Single			
2.0 16V	98-02	CR063		Single			
2.0 Hdi	99-02	CR063		Single			
2.0 Turbo	94-02	CR063		Single			
2.1 TD 12V	96-99	CR063		Single			
BOXER							
1000/1400 4x2	94-99	CR051	CR051		CR049	CR050	
1000/1400 4x4	96-99	CR051	CR051		CR051	CR051	
BOXER Autobus							
1.9 D - 1.9 TD - 2.0 i - 2.5 D	94-02	CR077		Single			
2.0 - 2.0 HDI	02->	CR077		Single			
2.0 i 4x4 - 2.5 D 4x4	96-02	CR077		Single			
2.2 HDI - 2.8 HDI	02->	CR077		Single			
2.5 TD	94-02	CR077		Single			
2.5 TD 4x4	96-02	CR077		Single			
2.5 TDI - 2.5 TDI 4x4	97-02	CR077		Single			
2.8 HDI	00-02	CR077		Single			

follow PEUGEOT / TALBOT / SIMCA

MODELLO MODEL	ANNO YEAR	ANT I FRONT INNER	ANT E FRONT OUTER	NOTE NOTES	POST I REAR INNER	POST E REAR OUTER	NOTE NOTES
BOXER Furgonato							
1.9 D - 1.9 TD - 2.0 i	94-02	CR077		Single			
2.0	02->	CR077		Single			
2.0 HDI	01->	CR077		Single			
2.2 HDI	02->	CR077		Single			
2.5 D - 2.5 TD	94-02	CR077		Single			
2.5 TDI	97-02	CR077		Single			
2.5 TDI 4x4	99-02	CR077		Single			
2.8 HDI	00->	CR077		Single			
2.8 HDI 4x4	02->	CR077		Single			
BOXER Pianale / Piatto							
1.9 TD	96-02	CR077		Single			
2.0 HDI - 2.2 HDI - 2.8 HDI	02->	CR077		Single			
2.0 i - 2.5 D - 2.5 TDI	94-02	CR077		Single			
2.5 TDI	97-02	CR077		Single			
2.5 TDI 4x4	99-02	CR077		Single			
CHRYSLER							
160-180		CR014	CR013				
2.0		CR014	CR013				
EXPERT (224)							
1.6 - 1.9 D - 1.9 TD	96->	CR063		Single			
2.0 - 2.0 Hdi	00->	CR063		Single			
EXPERT furgonato (222)							
1.6 - 1.9 D - 1.9 TD	96->	CR063		Single			
2.0 Hdi	00->	CR063		Single			
EXPERT pianale piatto (223)							
1.6 - 1.9 D - 1.9 TD	96->	CR063		Single			
HORIZONT							
Tutti i tipi/All types/Tous types	78-86				CR023		

follow PEUGEOT / TALBOT / SIMCA

MODELLO MODEL	ANNO YEAR	ANT I FRONT INNER	ANT E FRONT OUTER	NOTE NOTES	POST I REAR INNER	POST E REAR OUTER	NOTE NOTES
J5							
1000/1300/1400 1800 Kg 4x4	82-92 89-92 86-92	CR051 CR051 CR051	CR051 CR051 CR051		CR049	CR050	
J5 Autobus							
2.0	81-90	CR077		Single			
J5 Furgonato							
1.8	83-88	CR077		Single			
J5 Pianale Piatto / Telaio							
2.0	83-88	CR077		Single			
MATRA							
RANCHO	77-84	CR037		Single	CR023		
PARTNER							
1.1-1.4-1.6 D TD-1.9 D TD	96->		CR040				
SAMBA							
Tutti i tipi/All types/Tous types	82-86				CR048	CR028	

follow PEUGEOT / TALBOT / SIMCA

MODELLO MODEL	ANNO YEAR	ANT I FRONT INNER	ANT E FRONT OUTER	NOTE NOTES	POST I REAR INNER	POST E REAR OUTER	NOTE NOTES
SIMCA							
1.0	68-78	CR023	CR006		CR023	CR023	
1.0	68-70	CR023	CR006		CR023	CR023	
1.0	70-79	CR023	CR006		CR023	CR023	
1.0 GLS - LS - RALLY	73-77	CR023			CR023	CR023	
1.0 GLS 6 CV	77->	CR023			CR023	CR023	
1.1	68-78		CR037			CR023	
1.2 COUPE'	68-71	CR023	CR006		CR023	CR023	
1.2 GL-GLE-GLS	73-79		CR037			CR023	
1.3	63-76		CR023				
1.3	75-78		CR037			CR023	
1.5	63-76		CR023				
1.6	78-80	CR013	CR014				
150-180	71-81	CR014	CR013				
900	65-78	CR023			CR023	CR023	
900 S	73-75	CR023			CR023	CR023	
ALPINE	80-84				CR023		
BAGHEERA MATRA	78-80				CR023		
HORIZON	78-86				CR023		
MATRA	77-84				CR023		
MATRA RANCHO	77-88		CR037			CR023	
MINX	85-86				CR023		
SAMBA	81-86					CR028	
SOLARA	81-86				CR023		
SOLARA							
Tutti i tipi/All types/Tous types	81-86				CR023		
SUMBEAM							
Tutti i tipi/All types/Tous types			CR013				
TANGORA							
Tutti i tipi/All types/Tous types	81-83		CR048				

POLSKI

MODELLO MODEL	ANNO YEAR	ANT I FRONT INNER	ANT E FRONT OUTER	NOTE NOTES	POST I REAR INNER	POST E REAR OUTER	NOTE NOTES
125							
P	68-73	CR014	CR013				
P	74->	CR014	CR013		CR044		Single

follow POLSKI

MODELLO MODEL	ANNO YEAR	ANT I FRONT INNER	ANT E FRONT OUTER	NOTE NOTES	POST I REAR INNER	POST E REAR OUTER	NOTE NOTES
126 BIS							
Tutti i tipi/All types/Tous types	88-90	CR046	CR045		CR047	CR047	
FSO POLONEZ							
Tutti i tipi/All types/Tous types	79->	CR014	CR013		CR044		Single

PORCHE

MODELLO MODEL	ANNO YEAR	ANT I FRONT INNER	ANT E FRONT OUTER	NOTE NOTES	POST I REAR INNER	POST E REAR OUTER	NOTE NOTES
356							
Tutti i tipi/All types/Tous types	63-65	CR014	CR013				
904							
SPORT CARRERA	64-65	CR014	CR013				
906							
SPORT CARRERA	65-67	CR014	CR013				
911							
911E-911S 911T-911SC	72->\ 72->	CR014 CR014	CR013 CR013				
912							
Tutti i tipi/All types/Tous types	65-69	CR014	CR013				
914/4							
1.6-2.0 1.6-2.0	->73 73->	CR014 CR014	CR013 CR013		CR004		Single
914/6							
1.6-2.0 1.6-2.0	->73 73->	CR014 CR014	CR013 CR013		CR004		Single

follow PORCHE

MODELLO MODEL	ANNO YEAR	ANT I FRONT INNER	ANT E FRONT OUTER	NOTE NOTES	POST I REAR INNER	POST E REAR OUTER	NOTE NOTES
924							
Tutti i tipi/All types/Tous types	76->	CR005	CR006				
CARRERA GT	80-85	CR014	CR013				
Turbo	76->	CR005	CR006				
Turbo	80-85	CR014	CR013				
944							
Tutti i tipi/All types/Tous types		CR005	CR006				
CARRERA 2							
Tutti i tipi/All types/Tous types		CR004	CR004				

RENAULT

MODELLO MODEL	ANNO YEAR	ANT I FRONT INNER	ANT E FRONT OUTER	NOTE NOTES	POST I REAR INNER	POST E REAR OUTER	NOTE NOTES
CLIO							
1.2-14-1.9D	94->	CR016		Single	CR025		Single
1.7 Diesel	90->	CR016		Single			
16v	91->	CR016		Single			
RL-RN-RT 1.2-1.4-1.8	90->	CR030		Single	CR025		Single
WILLIAMS 2.0	94->	CR016		Single			
CLIO Grandtour							
1.2 16V - 1.5 DCI - 1.6 16V	08->	CR076		Single			
1.2 16V - 1.5 DCI - 1.6 16V	08->				CR038/R		Single

follow RENAULT

MODELLO MODEL	ANNO YEAR	ANT I FRONT INNER	ANT E FRONT OUTER	NOTE NOTES	POST I REAR INNER	POST E REAR OUTER	NOTE NOTES
CLIO III							
1.2 16V - 1.4 16V - 1.5 DCI	05->	CR076		Single			
1.2 16V - 1.5 dCi - 1.6 16V	05-14				CR119		Single
1.2 16V Hi-Flex	08->	CR076		Single			
1.2 16V Hi-Flex - 1.2 Ethanol	08-12				CR119		Single
1.4 16V	05->				CR038/R		Single
1.4 16V	05-14				CR119		Single
1.5 DCI	05->	CR088		Single			
1.5 dCi	05-14	CR116		Single			
1.6 16V	05->	CR076		Single			
1.6 16V GT	09->	CR088		Single			
1.6 16V GT	09-14	CR116		Single			
1.6 16V GT	09-14				CR119		Single
2.0 16V	06->	CR088		Single			
2.0 16V	06-14	CR116		Single			
2.0 16V	06-14				CR119		Single
CLIO III Cassone							
1.2	07-11				CR119		Single
1.5 dCi	05-14				CR119		Single
CLIO III Sportour							
1.2 16V - 1.4 16V - 1.5 dCi - 1.6 16V	07-12				CR119		Single
1.2 16V Hi-Flex	08-12				CR119		Single
1.5 dCi - 1.6 16V	07-12	CR116		Single			
CLIO Sportour							
1.5 DCI - 1.6 DCI	08->	CR088		Single			
ESPACE							
Tutti i tipi/All types/Tous types	84->	CR031		Single			
4x4	87-91	CR031		Single		CR016	
V6	84-96	CR031		Single			

follow RENAULT

MODELLO MODEL	ANNO YEAR	ANT I FRONT INNER	ANT E FRONT OUTER	NOTE NOTES	POST I REAR INNER	POST E REAR OUTER	NOTE NOTES
EXPRESS							
425 Kg.- 525 Kg.	86-90	CR030		Single	CR026		Single
575 Kg.	86-90	CR030		Single	CR038		Single
775 Kg.- 775 Kg. Diesel	91->	CR016		Single			
Diesel	86-86	CR030		Single	CR026		Single
Diesel	91->	CR030		Single			
Petrol	86->	CR030		Single			
FLUENCE							
1.5 dCi - 1.6 16V - 2.0 16V	10->	CR120		Single			
Z.E.	12->	CR120		Single			
FUEGO							
Tutti i tipi/All types/Tous types	80-86	CR031		Single			
TL-GTL	80-85	CR031		Single	CR048	CR028	
GRAND MODUS							
1.2 - 1.4 - 1.5 DCI - 1.6	04->				CR119		Single
1.2 16V	07->				CR119		Single
1.2 16V Hi-Flex	08->				CR119		Single
1.5 DCI	04->	CR088		Single			
1.5 dCi	04->	CR116		Single			
1.5 DCI 75 - 1.5 DCI 90	10->	CR088		Single			
1.5 dCi 75 - 1.5 dCi 90	10->	CR116		Single			
1.5 dCi 75 - 1.5 dCi 90	10->				CR119		Single
GRAND SCENIC II							
1.5 DCI	06-08	CR088		Single			
1.5 dCi - 1.9 dCi - 2.0	04-09	CR116		Single			
1.5 dCi - 1.9 dCi - 2.0	04-09				CR118		Single
1.6	04->	CR088		Single			
1.6	04-08	CR116		Single			
1.6	04-06				CR118		Single
1.9 DCI	04->	CR088		Single			
2.0	04->	CR088		Single			
2.0 dCi	05-08				CR118		Single

follow RENAULT

MODELLO MODEL	ANNO YEAR	ANT I FRONT INNER	ANT E FRONT OUTER	NOTE NOTES	POST I REAR INNER	POST E REAR OUTER	NOTE NOTES
GRAND SCENIC III							
1.2 Tce - 1.6 16V Bifuel	12->	CR120		Single			
1.4 16V - 1.5 dCi - 1.6 16V	09->	CR120		Single			
1.6 dCi	11->	CR120		Single			
1.6 E85 - 2.0 16V	09->	CR120		Single			
KANGOO							
Tutti i tipi/All types/Tous types	97-99	CR016		Single	CR038		Single
1.6	08->	CR076		Single			
1.6	08->				CR082		Single
KANGOO Express							
1.5 DCI - 1.5 DCI 85	08->				CR082		Single
1.5 DCI - 1.6 - 1.6 16V	08->	CR076		Single			
1.5 DCI 90	09->				CR082		Single
1.6 - 1.6 16V	08->				CR082		Single
LAGUNA							
1.6-1.8-2.0	93-99	CR016		Single	CR038		Single
1.9 Diesel	93-99				CR038		Single
LOGAN Station Wagon							
1.5 DCI	07->				CR082		Single
1.5 DCI - 1.6	07->	CR076		Single			
MASTER II Autobus							
1.9 dCi 80 - 2.5 dCi 120	01->				CR115		Single
1.9 dTI - 2.2 dCI 90	00->				CR115		Single
2.5 D - 2.8 dTI	98-01				CR115		Single
2.5 dCi	06->				CR115		Single
2.5 dCi 100 - 3.0 dCi 140	03->				CR115		Single
MASTER II Furgonato							
1.9 dCi 80 - 2.5 dCi 120	01->				CR115		Single
1.9 dTI - 2.2 dCI 90	00->				CR115		Single
2.5 D - 2.8 dTI	98-01				CR115		Single
2.5 dCi	06->				CR115		Single
2.5 dCi 100	03->				CR115		Single
3.0 dCi 140	03-06				CR115		Single

follow RENAULT							
MODELLO MODEL	**ANNO YEAR**	**ANT I FRONT INNER**	**ANT E FRONT OUTER**	**NOTE NOTES**	**POST I REAR INNER**	**POST E REAR OUTER**	**NOTE NOTES**
MASTER II Pianale piatto							
2.2 dCI 90	00->				CR115		Single
2.5 D - 2.8 dTI	98-01				CR115		Single
2.5 dCi	06->				CR115		Single
2.5 dCi 100 - 3.0 dCi 140	03->				CR115		Single
2.5 dCi 120	01->				CR115		Single
MEGANE							
Tutti i tipi/All types/Tous types	95->	CR016		Single	CR025		Single
BREAK 1.4-1.6-1.9D	96->	CR016		Single			
CLASSIC	95->	CR016		Single	CR025		Single
COUPE	95->	CR016		Single	CR025		Single
MEGANE CC							
1.2 TCe - 1.6 16V Bifuel	12->	CR120		Single			
1.4 TCe - 1.5 dCi - 16 16V -	10->	CR120		Single			
1.6 dCi	11->	CR120		Single			
1.9 dCi - 2.0 CVT	10->	CR120		Single			
MEGANE II							
1.4 16V	02->	CR076		Single			
1.4 16V - 1.5 dCi - 1.6 16V - 1.9 dCi	02-08				CR119		Single
1.5 DCI	05-08	CR088		Single			
1.5 dCi	05-08	CR116		Single			
1.5 DCI - 1.6 16V - 2.0 16V	02->	CR076		Single			
1.6	05->	CR076		Single			
1.6	05-08				CR119		Single
1.6 16V - 2.0	06-08				CR119		Single
1.6 Flex-Fuel	07->	CR076		Single			
1.6 Flex-Fuel	07-08				CR119		Single
1.9 DCI	02-09	CR088		Single			
1.9 dCi	04-09	CR116		Single			
2.0	06-08	CR088		Single			
2.0	06-08	CR116		Single			
2.0	06-08	CR117		Single			
2.0 16V	02-08				CR119		Single
2.0 16V Turbo	04-08	CR088		Single			
2.0 16V Turbo	04-08	CR116		Single			
2.0 16V Turbo	04-08				CR119		Single
2.0 dCi	07-08	CR117		Single			
2.0 Renault Sport	04-09	CR117		Single			
2.0 Renault Sport	04-09				CR119		Single

follow RENAULT

MODELLO MODEL	ANNO YEAR	ANT I FRONT INNER	ANT E FRONT OUTER	NOTE NOTES	POST I REAR INNER	POST E REAR OUTER	NOTE NOTES
MEGANE II Coupè-Cabriolet							
1.5 DCI	06-09	CR088		Single			
1.5 dCi	06-09	CR116		Single			
1.5 dCi	06-09				CR119		Single
1.6 - 1.9 dCi - 2.0	03-09				CR119		Single
1.6 - 2.0	03->	CR076		Single			
1.6 16V	07->	CR076		Single			
1.6 16V	06-08				CR119		Single
1.9 DCI	03-09	CR088		Single			
1.9 dCi	03-09	CR116		Single			
2.0 16V	04-09	CR088		Single			
2.0 16V Turbo	04-09	CR116		Single			
2.0 16V Turbo	04-09				CR119		Single
2.0 dCi	05-09				CR118		Single
MEGANE II Station Wagon							
1.4 - 1.5 DCI - 1.6 - 1.9 dCi - 2.0	05-09				CR118		Single
1.4 - 1.5 DCI - 1.6 - 2.0	03->	CR076		Single			
1.5 DCI	03-09	CR088		Single			
1.5 dCi - 1.9 dCi	03-09	CR116		Single			
1.6 16V	07->	CR076		Single			
1.6 16V	06-09				CR118		Single
1.6 16V Hi-Flex	08->	CR076		Single			
1.6 16V Hi-Flex	08-09				CR118		Single
1.9 DCI	03-09	CR088		Single			
2.0	03-09				CR119		Single
2.0 dCi	05-09				CR118		Single
MEGANE II Tre volumi							
1.4 - 1.5 DCI - 1.6 - 2.0	03->	CR076		Single			
1.4 - 1.6 - 1.9 dCi - 2.0	03->				CR119		Single
1.5 dCi	03-10				CR119		Single
1.6 16V	07->	CR076		Single			
1.6 16V	06->				CR119		Single
1.9 DCI	03->	CR088		Single			
1.9 dCi	03->	CR116		Single			
2.0 dCi	05->				CR118		Single

follow RENAULT

MODELLO MODEL	ANNO YEAR	ANT I FRONT INNER	ANT E FRONT OUTER	NOTE NOTES	POST I REAR INNER	POST E REAR OUTER	NOTE NOTES
MEGANE III 2 volumi							
1.2 TCe	12-15	CR120		Single			
1.4 TCe - 2.0 CVT	09->	CR120		Single			
1.5 dCi - 16 16V - 1.9 dCi	08->	CR120		Single			
1.6 16V Hi-Flex	08-15	CR120		Single			
1.6 dCi	11-15	CR120		Single			
MEGANE III Coupé							
1.2 TCe	12-15	CR120		Single			
1.4 TCe - 2.0 CVT	09->	CR120		Single			
1.5 dCi - 16 16V - 1.9 dCi	08-15	CR120		Single			
1.6 16V Bifuel	08->	CR120		Single			
1.6 dCi	11-15	CR120		Single			
MEGANE III Grandtour							
1.2 TCe	12->	CR120		Single			
1.4 TCe - 1.5 dCi - 1.6 16V	09->	CR120		Single			
1.6 Bifuel	08->	CR120		Single			
1.6 dCi	11->	CR120		Single			
1.9 dCi - 2.0 CVT	09->	CR120		Single			
MEGANE IV 2 volumi							
1.2 TCe 100 - 1.2 TCe 130	15->	CR120		Single			
1.3 TCe 115 - 1.3 TCe 140	18->	CR120		Single			
1.5 dCi 110 - 1.5 dCi 90 - 1.6 dCi 165	15->	CR120		Single			
MEGANE IV Sporter							
1.2 TCe 100 - 1.2 TCe 130	16->	CR120		Single			
1.3 TCe 115 - 1.3 TCe 140	18->	CR120		Single			
1.5 dCi 110 - 1.5 dCi 90	16->	CR120		Single			
1.6 16V - 1.6 TCe 205	16->	CR120		Single			
1.6 dCi 130- 1.6 dCi 165	16->	CR120		Single			

follow RENAULT

MODELLO MODEL	ANNO YEAR	ANT I FRONT INNER	ANT E FRONT OUTER	NOTE NOTES	POST I REAR INNER	POST E REAR OUTER	NOTE NOTES
MODUS							
1.2	04->				CR038/R		Single
1.2 - 1.4 - 1.5 DCI - 1.6	04->	CR076		Single			
1.2 - 1.4 - 1.5 DCI - 1.6	04->				CR119		Single
1.2 16V	07->	CR076		Single			
1.2 16V	07->				CR119		Single
1.2 16V	07->				CR038/R		Single
1.2 16V Hi-Flex	08->				CR038/R		Single
1.2 16V Hi-Flex	08->				CR119		Single
1.4	04->				CR038/R		Single
1.5 DCI	04->	CR088		Single	CR038/R		Single
1.5 dCi	04->	CR116		Single			
1.5 dCi 75 - 1.5 dCi 88	10->	CR088		Single			
1.5 dCi 75 - 1.5 dCi 89	10->	CR116		Single			
1.5 dCi 75 - 1.5 dCi 90	10->				CR119		Single
1.6	04->				CR038/R		Single
R 11							
Tutti i tipi/All types/Tous types	83->	CR030		Single	CR025		Single
Diesel	83->	CR030		Single	CR025		Single
TURBO	84->	CR030		Single	CR025		Single
R 12							
L-TL-TR-TS	77-80	CR027	CR027		CR048	CR028	
R 14							
Tutti i tipi/All types/Tous types	76-83				CR048	CR028	
R 15							
Tutti i tipi/All types/Tous types	77-79	CR027	CR027		CR048	CR028	
R 16							
Tutti i tipi/All types/Tous types	76-80				CR048	CR028	
R 17							
Tutti i tipi/All types/Tous types	77-80	CR027	CR027				

follow RENAULT

MODELLO MODEL	ANNO YEAR	ANT I FRONT INNER	ANT E FRONT OUTER	NOTE NOTES	POST I REAR INNER	POST E REAR OUTER	NOTE NOTES
R 18							
Diesel-Turbo D.	83->	CR031		Single			
L-TL-GTL-TS-GTS	81->	CR031		Single			
R1340 L-TL-GTL	81-83	CR027	CR027		CR048	CR028	
R1340 L-TL-GTL	84-86		CR031		CR048	CR028	
R1341 TS GTS	84-86		CR031		CR048	CR028	
R1341 TS GTS	78-83	CR027	CR027		CR048	CR028	
SOCIETE	78-82	CR027	CR027				
TD-GTD	81-86		CR031		CR048	CR028	
TS -GTL	78-82	CR027	CR027				
TS-GTL 4x4	83-86		CR031				
TX-GTX-Turbo E	81->	CR031		Single			
R 19							
Tutti i tipi/All types/Tous types	94->	CR016		Single	CR025		Single
CHAMADE	89->	CR016		Single	CR025		Single
GTX-TXE-TXI	89->	CR016		Single	CR025		Single
TD-TDE-GTD	89->	CR016		Single	CR025		Single
TR-TRE-GTR	89->	CR030	CR030				
TSE-GTS-GTE	89->	CR016		Single	CR025		Single
R 20							
LS-TS-AUT	78-84	CR029		Single			
L-TL-GTL-GTD-AUT	77-83	CR027	CR027				
L-TL-GTL-LS-TS	80->	CR031		Single			
TD-GTD	81->	CR031		Single			
TX-AUT	81-84	CR029		Single			
R 21							
2.0 Turbo	86->	CR031		Single			
GSD	86->				CR026		Single
GTL-GTS-TL-TS	86->	CR016		Single	CR026		Single
NEVADA GTS-TL	86->	CR016		Single			
NEVADA GTX-TX	86->	CR016		Single			
NEVADA TD-TDX	86->	CR031		Single			
NEVADA TL-TS-TSE	86->	CR016		Single			
NEVADATBD-GTD	86->	CR031		Single			
TBD-TDX	86->	CR031		Single			
TSE-RS-GTS-GTX	86->	CR016		Single	CR026		Single
TXE-TXI-GTD-TD	86->	CR031		Single	CR026		Single

follow RENAULT

MODELLO MODEL	ANNO YEAR	ANT I FRONT INNER	ANT E FRONT OUTER	NOTE NOTES	POST I REAR INNER	POST E REAR OUTER	NOTE NOTES
R 25							
Tutti i tipi/All types/Tous types	84-92	CR031		Single			
R 30							
TS-TX	76-84	CR029		Single			
Turbo Diesel	82-84	CR031		Single			
R 4							
ESPANA	77->				CR048	CR028	
TL	76-86				CR048	CR028	
R 5							
ALPINE TURBO	82-84	CR027		Single		CR028	
ESPANA	77-84					CR028	
L-LS-GTL-TL	80-84				CR048	CR028	
R1220	77-84				CR048	CR028	
R1221-R1222	77-84					CR028	
R1223 ALPINE	78-81	CR027		Single	CR048	CR028	
R1224-R1225-R1227	72-84				CR048	CR028	
SOCIETE	80-84				CR048	CR028	
SUPER	84->		CR030		CR025		Single
SUPER D	84->				CR025		Single
SUPER GT TURBO-GTE	85->		CR030				
R 6							
Tutti i tipi/All types/Tous types	76-79				CR048	CR028	
R 7							
ESPANA	77-79					CR028	
TL-GTL	76-78					CR028	
R 9							
Tutti i tipi/All types/Tous types	81->	CR030		Single	CR025		Single
Diesel	81->	CR030		Single	CR025		Single
TURBO	85->	CR030		Single	CR025		Single

follow RENAULT

MODELLO MODEL	ANNO YEAR	ANT I FRONT INNER	ANT E FRONT OUTER	NOTE NOTES	POST I REAR INNER	POST E REAR OUTER	NOTE NOTES
SCENIC II							
1.4	03->	CR088		Single			
1.4 - 1.5 dCi 1.9 dCi	03-08	CR116		Single			
1.4 - 1.5 dCi 1.9 dCi	03-08				CR118		Single
1.5 DCI	03->	CR088		Single			
1.6	03->	CR088		Single			
1.6	03-06	CR116		Single			
1.6	03-06				CR118		Single
1.6 16V	05->	CR088		Single			
1.6 16V	05-08	CR116		Single			
1.6 16V	05-08				CR118		Single
1.9 D	06->	CR088		Single			
1.9 D	06-08	CR116		Single			
1.9 D	06-08				CR118		Single
1.9 DCI	03->	CR088		Single			
2.0	03->	CR088		Single			
2.0	03-09	CR116		Single			
2.0	03-09				CR118		Single
2.0 16V Turbo	04->	CR088		Single			
2.0 16V Turbo	04-08	CR116		Single			
2.0 16V Turbo	04-08				CR118		Single
2.0 dCi	05-08				CR118		Single
SCENIC III							
1.2 TCe	12->	CR120		Single			
1.4 16V - 1.5 dCi - 1.6 16V	09->	CR120		Single			
1.6 16V Bifuel - 1.6 E85 - 2.0 16V	09->	CR120		Single			
1.6 dCi	11->	CR120		Single			
SUPER 5							
Tutti i tipi/All types/Tous types	85->	CR030		Single	CR025		Single
Diesel	85->	CR030		Single			
GT Turbo	85-91	CR030		Single			
TRAFIC							
All models	81-91	CR029		Single			
T1-T3-T4-T5-T6-T9-TA	84-86	CR029		Single		CR048	

follow RENAULT

MODELLO MODEL	ANNO YEAR	ANT I FRONT INNER	ANT E FRONT OUTER	NOTE NOTES	POST I REAR INNER	POST E REAR OUTER	NOTE NOTES
TRAFIC II Autobus							
1.9 dCI 100 - 1.9 dCI 80 - 2.0	06-08	CR117		Single			
2.0 16V - 2.0 dCi 90 - 2.0 dCi 115	06->	CR117		Single			
2.5 dCi 135	03->	CR117		Single			
2.5 dCi 145	06->	CR117		Single			
TRAFIC II Furgonato							
1.9 dCI 100 - 1.9 dCI 80 - 2.0	06-08	CR117		Single			
2.0 16V - 2.0 dCi 90 - 2.0 dCi 115	06->	CR117		Single			
2.5 dCi	07->	CR117		Single			
2.5 dCi 135	03->	CR117		Single			
2.5 dCi 145	06->	CR117		Single			
TRAFIC II Pianale piatto							
1.9 dCI 100 - 1.9 dCI 80 - 2.0	06-08	CR117		Single			
2.0 16V - 2.0 dCi 90 - 2.0 dCi 115	06->	CR117		Single			
2.5 dCi	07->	CR117		Single			
2.5 dCi 135	03->	CR117		Single			
2.5 dCi 145	06->	CR117		Single			

follow RENAULT

MODELLO MODEL	ANNO YEAR	ANT I FRONT INNER	ANT E FRONT OUTER	NOTE NOTES	POST I REAR INNER	POST E REAR OUTER	NOTE NOTES
TRUCKS							
D10 P210 - D10 P240 - D12 P210	13->				CR106		Single
D12 P240 - D12 P250 - D12 P280	13->				CR106		Single
D13 P210, 13 KP210	13->				CR106		Single
D13 P240, 13 KP240	13->				CR106		Single
D13 P250, 13 KP250	13->				CR106		Single
D13 P280, 13 KP280	13->				CR106		Single
D14 P210, 13 KP210	13->				CR106		Single
D14 P240, 13 KP240	13->				CR106		Single
D14 P250, 13 KP250	13->				CR106		Single
D14 P280, 13 KP280	13->				CR106		Single
D16 P210, 13 KP210	13->				CR106		Single
D16 P240, 13 KP240	13->				CR106		Single
D16 P250, 13 KP250	13->				CR106		Single
D16 P280, 13 KP280	13->				CR106		Single
D18 P250, 13 KP250	13->				CR106		Single
D18 P280, 13 KP280	13->				CR106		Single
D18 P320, 13 KP320	13->				CR106		Single
D18 T280 - D 18 T320	13->				CR106		Single
D25 P250 - D25 P280 - D25 P320	13->				CR106		Single
D26 P250, 26 KP250	13->				CR106		Single
D26 P280, 26 KP280	13->				CR106		Single
D26 P320, 26 KP320	13->				CR106		Single
TWINGO							
1.1 - 1.2	93->	CR030		Single	CR025		Single
1.2 - 1.2 16V - 1.2 Turbo	07->	CR076		Single			
1.5 DCI	08->	CR076		Single			
TWINGO II							
1.6 RS	08->	CR088		Single			
1.6 RS	08-14	CR116		Single			
1.6 RS	08-14				CR119		Single
VEL SATIS							
2.0 16V Turbo - 2.2 dCi - 3.0 dCi	02-09	CR117		Single			
2.0 dCi	05->	CR117		Single			
3.5 V6	02->	CR117		Single			

follow RENAULT

MODELLO MODEL	ANNO YEAR	ANT I FRONT INNER	ANT E FRONT OUTER	NOTE NOTES	POST I REAR INNER	POST E REAR OUTER	NOTE NOTES
WIND							
1.2	10->	CR088		Single			
1.2 - 1.6	10->	CR116		Single			
1.2 - 1.6	10->				CR119		Single
1.2 TCE	11->	CR088		Single			
1.2 TCE	11->	CR116		Single			
1.2 TCE	11->				CR119		Single
1.6	10->	CR088		Single			

RENAUT

MODELLO MODEL	ANNO YEAR	ANT I FRONT INNER	ANT E FRONT OUTER	NOTE NOTES	POST I REAR INNER	POST E REAR OUTER	NOTE NOTES
ESPACE IV							
1.9 dCi	02-05	CR117		Single			
2.0 - 3.0 dCi	02-15	CR117		Single			
2.0 dCi	06->	CR117		Single			
2.0 Turbo - 2.2 dCi - 3.5 V6	02->	CR117		Single			

ROVER

MODELLO MODEL	ANNO YEAR	ANT I FRONT INNER	ANT E FRONT OUTER	NOTE NOTES	POST I REAR INNER	POST E REAR OUTER	NOTE NOTES
75							
1.8 - 2.0 CDT - 2.0 V6 - 2.5 V6	99-05	CR121		Single			
1.8 Turbo - 2.0 CDTi	03-05	CR121		Single			
75 I Tourer							
1.8 - 2.0 CDT - 2.0 V6 - 2.5 V6	01-05	CR121		Single			
76 I Tourer							
1.8 Turbo - 2.0 CDTi	03-05	CR121		Single			
ALLEGRO							
Tutti i tipi/All types/Tous types	73-83				CR023	CR006	
ITAL							
Tutti i tipi/All types/Tous types	81-84	CR023	CR006				

follow ROVER

MODELLO MODEL	ANNO YEAR	ANT I FRONT INNER	ANT E FRONT OUTER	NOTE NOTES	POST I REAR INNER	POST E REAR OUTER	NOTE NOTES
M.G.							
Tutti i tipi/All types/Tous types		CR014	CR013				
MARINA							
Tutti i tipi/All types/Tous types	71-80	CR023	CR006				
VAN	71-81	CR023	CR006				
ROVER							
2000	63-73	CR014	CR013				
2200	74-76	CR014	CR013				
2300	77-86	CR014	CR013				
2600	77-86	CR014	CR013				
3500	68-75	CR014	CR013				
3500	76-86	CR014	CR013				
3500 S	68-75	CR014	CR013				
VANDEN PLAS							
1.5	75-81				CR023	CR006	

SAAB

MODELLO MODEL	ANNO YEAR	ANT I FRONT INNER	ANT E FRONT OUTER	NOTE NOTES	POST I REAR INNER	POST E REAR OUTER	NOTE NOTES
600							
Tutti i tipi/All types/Tous types	80-87		CR002				
90							
Tutti i tipi/All types/Tous types	85-87	CR004		Single			
900							
Tutti i tipi/All types/Tous types	80-87	CR004		Single			
Tutti i tipi/All types/Tous types	87->	CR004		Single			
16v Cabrio		CR004		Single			
900 II							
2.0 i	94-98	CR073		Single			
2.0-16 Turbo	93-98	CR073		Single			
2.3-16	93-98	CR073		Single			
2.5-24 V6	93-98	CR073		Single			

follow SAAB

MODELLO MODEL	ANNO YEAR	ANT I FRONT INNER	ANT E FRONT OUTER	NOTE NOTES	POST I REAR INNER	POST E REAR OUTER	NOTE NOTES
900 II Cabriolet							
2.0 i	93-98	CR073		Single			
2.0-16 Turbo	93-98	CR073		Single			
2.3-16	93-98	CR073		Single			
2.5-24 V6	93-98	CR073		Single			
900 II Coupè							
2.0 i	93-98	CR073		Single			
2.0-16 Turbo	93-98	CR073		Single			
2.3-16	93-98	CR073		Single			
2.5-24 V6	93-98	CR073		Single			
9-3 (YS3D)							
2.0 i - 2.0 SE Turbo	98-02	CR073		Single			
2.0 Turbo - 2.2 TiD	98-02	CR073		Single			
2.3 i - 2.3 Turbo	98-02	CR073		Single			
9-3 (YS3F)							
1.8 t - 2.0 T - 2.2 TiD	02->	CR073		Single			
9-3 Cabriolet (YS3D)							
2.0 i - 2.0 SE Turbo	98-03	CR073		Single			
2.0 Turbo - 2.3 i - 2.3 Turbo	98-03	CR073		Single			
99							
Tutti i tipi/All types/Tous types	80-84	CR004		Single			

SEAT

MODELLO MODEL	ANNO YEAR	ANT I FRONT INNER	ANT E FRONT OUTER	NOTE NOTES	POST I REAR INNER	POST E REAR OUTER	NOTE NOTES
124							
Tutti i tipi/All types/Tous types	68-80	CR020	CR013		CR003		Single
Diesel	68-80	CR020	CR013		CR003		Single
127/FURA							
Tutti i tipi/All types/Tous types	76-85	CR001		Single			

follow SEAT							
MODELLO MODEL	**ANNO YEAR**	**ANT I FRONT INNER**	**ANT E FRONT OUTER**	**NOTE NOTES**	**POST I REAR INNER**	**POST E REAR OUTER**	**NOTE NOTES**
128							
Tutti i tipi/All types/Tous types	76-80	CR001		Single			
131							
Tutti i tipi/All types/Tous types	75-84	CR010	CR013		CR003		Single
132							
Tutti i tipi/All types/Tous types	72-82	CR014	CR013		CR003		Single
133							
Tutti i tipi/All types/Tous types	74-81	CR046	CR045				
1430							
Tutti i tipi/All types/Tous types	70-74	CR020	CR013			CR003	
ALHAMBRA							
1.8 T 20V	97-10				CR125		Single
1.9 TDI	02-08	CR081		Single			
1.9 TDI - 2.0 i	96-10				CR125		Single
2.0 TDI	05-10				CR125		Single
2.8 V6	00-10				CR125		Single
CORDOBA							
Tutti i tipi/All types/Tous types	93->	CR009		Single	CR005	CR006	
1.9 TDI	02->	CR081		Single			
CORDOBA 2 volumi							
1.6 - 1.9 SDI - 1.9 TDI	99-02	CR081		Single			
CORDOBA Vario							
1.6 - 1.9 SDI - 1.9 TDI	99-02	CR081		Single			

follow SEAT

MODELLO MODEL	ANNO YEAR	ANT I FRONT INNER	ANT E FRONT OUTER	NOTE NOTES	POST I REAR INNER	POST E REAR OUTER	NOTE NOTES
IBIZA							
Tutti i tipi/All types/Tous types	84->	CR002		Single			
Tutti i tipi/All types/Tous types	93->	CR009		Single	CR005	CR006	
900-1.2-Diesel	91->	CR002		Single			
Diesel	84->	CR002		Single			
IBIZA I							
1.2 / 1.2 i	84-93	CR002		Single			
1.5 / 1.5 i / 1.5 i Cat.	84-93	CR002		Single			
1.7 D	84-93	CR002		Single			
IBIZA III							
1.6 - 1.9 SDI - 1.9 TDI	99-02	CR081		Single			
IBIZA IV							
1.9 TDI	02->	CR081		Single			
INCA							
Tutti i tipi/All types/Tous types	95->		CR009		CR005	CR013	
1.9 TDI	96-03	CR081		Single			
LEON							
1.4 16V - 1.6	99-06	CR081		Single			
1.6 16V	00-06	CR081		Single			
1.8 20V - 1.8 20V T	99-06	CR081		Single			
1.8 20V T 4	99-06	CR081		Single			
1.8 T Cupra R	02-06	CR081		Single			
1.9 TDI	99-06	CR081		Single			
1.9 TDI Syncro	02-06	CR081		Single			
2.8 Cupra 4	01-06	CR081		Single			
MALAGA							
1.2 / 1.2 i	84->	CR002		Single			
Diesel	84->	CR002		Single			
RONDA							
1.2/ 1.4 / 1.5 / 1.6	82->	CR002		Single			
Diesel	82->	CR002		Single			

follow SEAT

MODELLO MODEL	ANNO YEAR	ANT I FRONT INNER	ANT E FRONT OUTER	NOTE NOTES	POST I REAR INNER	POST E REAR OUTER	NOTE NOTES
SPORT							
1.2-1.4	75-79		CR001				
TOLEDO							
1.6-1.8-1.8 16v-2.0	91->	CR009		Single	CR005	CR006	
1.9 Diesel-Turbo Ds	94->	CR009		Single	CR005	CR006	
2.0 16v	94->	CR009		Single	CR005	CR006	
TOLEDO II							
1.4 16V	99-06	CR081		Single			
1.6	99-00	CR081		Single			
1.6 16V	00-06	CR081		Single			
1.8 20V	99-06	CR081		Single			
1.8 20VT	01-06	CR081		Single			
1.9 SDI	99-04	CR081		Single			
1.9 TDI	99-06	CR081		Single			
2.3 V5	99-01	CR081		Single			
2.3 V5 20V	01-06	CR081		Single			

SKODA

MODELLO MODEL	ANNO YEAR	ANT I FRONT INNER	ANT E FRONT OUTER	NOTE NOTES	POST I REAR INNER	POST E REAR OUTER	NOTE NOTES
FABIA							
1.9 TDI	00-08	CR081		Single			
2.0	99-08	CR081		Single			
FABIA Combi							
1.9 TDI	00-07	CR081		Single			
FABIA Tre Volumi							
1.9 TDI	00-07	CR081		Single			
FAVORIT							
1.3	93->	CR002		Single	CR005	CR006	
115-135-136	88-92	CR002		Single	CR014		
FELICIA							
Tutti i tipi/All types/Tous types	94->				CR005	CR006	

follow SKODA							
MODELLO MODEL	ANNO YEAR	ANT I FRONT INNER	ANT E FRONT OUTER	NOTE NOTES	POST I REAR INNER	POST E REAR OUTER	NOTE NOTES
FELICIA I							
1.6 LX	95-98	CR081		Single			
FELICIA I Fun							
1.6	97->	CR081		Single			
FELICIA I Station wagon							
1.6 GLX	95-98	CR081		Single			
FELICIA II							
1.6	98-01	CR081		Single			
FELICIA II Station wagon							
1.6	98-01	CR081		Single			
FORMAN							
1.3	91-92	CR002		Single	CR014		
1.3	92->	CR002		Single	CR005	CR006	
OCTAVIA							
1.4	99->	CR081		Single			
1.4 16V	00->	CR081		Single			
1.6 - 1.8	96->	CR081		Single			
1.8 T	96->	CR081		Single			
1.8 T 4x4	01->	CR081		Single			
1.9 SDI	97->	CR081		Single			
1.9 TDI	96->	CR081		Single			
2.0	99->	CR081		Single			
RS 1.8 T	01->	CR081		Single			
OCTAVIA Combi							
1.4 16V	00->	CR081		Single			
1.6 - 1.8 20V - 1.8 T	98->	CR081		Single			
1.8 T 4x4	01->	CR081		Single			
1.9 SDI - 1.9 TDI	98->	CR081		Single			
1.9 TDI 4x4 - 2.0	99->	CR081		Single			
2.0 4x4	00->	CR081		Single			
RS 1.8 T	02->	CR081		Single			

follow SKODA

MODELLO MODEL	ANNO YEAR	ANT I FRONT INNER	ANT E FRONT OUTER	NOTE NOTES	POST I REAR INNER	POST E REAR OUTER	NOTE NOTES
PICK-UP							
Tutti i tipi/All types/Tous types	95-				CR005	CR006	
SUPERB I							
1.8 T - 1.9 TDI - 2.0	01-08	CR124		Single			

TOYOTA

MODELLO MODEL	ANNO YEAR	ANT I FRONT INNER	ANT E FRONT OUTER	NOTE NOTES	POST I REAR INNER	POST E REAR OUTER	NOTE NOTES
ARAYA							
Tutti i tipi/All types/Tous types			CR059				
AYGO							
1.0	05->	CR122		Single			
1.0 GPL	05-14	CR122		Single			
1.0 VVTi	18->	CR122		Single			
1.2	14->	CR122		Single			
1.4 HDi	05-10	CR122		Single			
BABY CAMRRY							
Tutti i tipi/All types/Tous types			CR059				
CARINA							
1.5-1.6	81-85	CR005	CR006				
1.6	71-74	CR023	CR006				
1.6	74-81	CR005	CR006				
1.6	77-81	CR014	CR013				
1.6 E - 1.8 E - 2.0 E	92-97		CR053				
1.6-1.8-2.0	83-85	CR014	CR013				
1.8	77-81	CR014	CR013				
2.0	79-81	CR005	CR006				
CARINA II							
1.6	83-92	CR078		Single			
2.0 D	84-87	CR078		Single			
2.0 GLI	87-92	CR078		Single			

follow TOYOTA

MODELLO MODEL	ANNO YEAR	ANT I FRONT INNER	ANT E FRONT OUTER	NOTE NOTES	POST I REAR INNER	POST E REAR OUTER	NOTE NOTES
CARINA II Station Wagon							
1.6	87-92	CR078		Single			
2.0 - 2.0 D	87-92	CR078		Single			
CARINA II Tre volumi							
1.6	83-92	CR078		Single			
2.0 GLI	87-92	CR078		Single			
CELICA							
1.6	71-74	CR013	CR006				
1.6	74-81	CR005	CR006				
1.6	77-81	CR014	CR013				
1.6	81-85	CR005	CR006				
1.8 i 16V - 2.0 i 16V	93-99	CR078		Single			
1-8 - 2.0 - 2.8	81-85	CR014	CR013				
2.0	87-90	CR078		Single			
AT150 - ST182 (C/ABS)	89-93		CR053				
CELICA 2 volumi							
1.6 GT	87-89	CR078		Single			
2.0 GT	85-89	CR078		Single			
CELICA Cabriolet							
2.0 GT	86-90	CR078		Single			
COROLLA							
Tutti i tipi/All types/Tous types			CR059				
1.1-1.2	67-74	CR023	CR006				
1.2	74-79	CR005	CR006				
1.3 - 1.6	83-87	CR078		Single			
1.3 - 1.6 - 1.8	80-83	CR005	CR006				
1.4	70-74	CR023	CR006				
1.4 D	04->	CR078		Single			
1.4 VVT-i / 1.6 VVT-i	02->	CR078		Single			
1.4-1.6	74-79	CR005	CR006				
2.0 D-4D	02->	CR078		Single			
COROLLA FX Compact							
1.6 GT 16V	85-87	CR078		Single			

follow TOYOTA							
MODELLO MODEL	ANNO YEAR	ANT I FRONT INNER	ANT E FRONT OUTER	NOTE NOTES	POST I REAR INNER	POST E REAR OUTER	NOTE NOTES
COROLLA Liftback							
1.3	85-87	CR078		Single			
1.6 - 1.8 D	83-87	CR078		Single			
COROLLA Station Wagon							
1.4 D	04->	CR078		Single			
1.4 VVT-i / 1.6 VVT-i	02->	CR078		Single			
2.0 D-4D	02->	CR078		Single			
COROLLA Tre volumi							
1.4 D	04->	CR078		Single			
1.4 VVT-i - 1.6 VVT-i	02->	CR078		Single			
COROLLA Verso							
1.6 VVT-i / 1.8 VVT-i	02-04	CR078		Single			
1.8 - 2.0 D-4D	04->	CR078		Single			
2.0 D-4D	02-04	CR078		Single			
CORONA							
1.6	68-70	CR023	CR006				
1.6	73-78	CR014	CR013				
1.7	70-73	CR023	CR006				
1.8	73-75	CR014	CR013				
1.9	70-73	CR023	CR006				
2.0	72-74	CR005	CR006				
2.0-2.3	72-74	CR014	CR013				
CRESSIDA							
2.0	77-84	CR014	CR013				
HIACE							
1.6-1.8-2.0	77-89	CR024	CR022				
2.4	89-90	CR024	CR022				
HILUX							
2WD	78-90	CR024	CR022				

follow TOYOTA							
MODELLO MODEL	ANNO YEAR	ANT I FRONT INNER	ANT E FRONT OUTER	NOTE NOTES	POST I REAR INNER	POST E REAR OUTER	NOTE NOTES
IQ							
1.33 - 1.4 D-4D	09-15	CR123		Single			
LITEACE							
Tutti i tipi/All types/Tous types	79-85	CR014	CR013				
MR 2							
1.8 16V VT-i	00->	CR078		Single			
PRIUS Tre volumi							
1.5	00-04	CR078		Single			
RAV4							
2.0 (C/ABS)	95->		CR053				
STARLET							
Tutti i tipi/All types/Tous types	78-84	CR023	CR006				
URBAN CRUISER							
1.33 1.4 D-4D - 1.4 D-4D 4WD	09-15 09-14	CR123 CR123		Single Single			
VERSO S							
1.33 - 1.4 D-4D	10-16	CR123		Single			

follow TOYOTA

MODELLO MODEL	ANNO YEAR	ANT I FRONT INNER	ANT E FRONT OUTER	NOTE NOTES	POST I REAR INNER	POST E REAR OUTER	NOTE NOTES
YARIS							
1.0	10-16	CR123		Single			
1.0 - 1.3	99-05	CR125		Single			
1.0 GPL	06-11	CR123		Single			
1.0 VVT-i	05-11	CR123		Single			
1.3 - 1.4 D	11->	CR123		Single			
1.3 VVT-i	05-10	CR123		Single			
1.33 VVT-i	08-11	CR123		Single			
1.4 D-4D	05-12	CR123		Single			
1.4 D-4D	01-05	CR125		Single			
1.5	17->	CR123		Single			
1.5	00-05	CR125		Single			
1.5 Hybrid	12->	CR123		Single			
1.8 VVTi	07-11	CR123		Single			
YARIS VERSO							
1.3	99-05	CR125		Single			
1.4 D-4D - 1.5	00-05	CR125		Single			
YARIS VERSO VAN							
1.3 VVTi	00-05	CR125		Single			
1.4 D4d	01-05	CR125		Single			

VOLKSWAGEN

MODELLO MODEL	ANNO YEAR	ANT I FRONT INNER	ANT E FRONT OUTER	NOTE NOTES	POST I REAR INNER	POST E REAR OUTER	NOTE NOTES
181							
SAFARI		CR005	CR006		CR005	CR006	
411-412							
Tutti i tipi/All types/Tous types		CR005	CR006				

follow VOLKSWAGEN

MODELLO MODEL	ANNO YEAR	ANT I FRONT INNER	ANT E FRONT OUTER	NOTE NOTES	POST I REAR INNER	POST E REAR OUTER	NOTE NOTES
BORA							
1.4 16V - 1.6 - 1.6 16V	00-05	CR081		Single			
1.6 FSI	02-05	CR081		Single			
1.8	98-08	CR081		Single			
1.8 4motion	99-05	CR081		Single			
1.8 T	00-05	CR081		Single			
1.9 SDI - 1.9 TDI	98-05	CR081		Single			
1.9 TDI 4motion - 2.0	99-05	CR081		Single			
2.0 4motion	00-05	CR081		Single			
2.3 V5 - 2.3 V5 4motion	98-05	CR081		Single			
2.8 V6 4motion	99-05	CR081		Single			
BORA Station Wagon							
1.4 16V	01-05	CR081		Single			
1.6 - 1.6 16V	00-05	CR081		Single			
1.6 FSI	02-05	CR081		Single			
1.8 4 motion	99-05	CR081		Single			
1.8 T	00-05	CR081		Single			
1.9 TDI	99-05	CR081		Single			
1.9 TDI 4motion	99-05	CR081		Single			
2.0	99-05	CR081		Single			
2.0 4motion	00-05	CR081		Single			
2.3 V5	99-05	CR081		Single			
2.3 V5 4motion	99-05	CR081		Single			
2.8 V6 4motion	99-05	CR081		Single			
CADDY							
Tutti i tipi/All types/Tous types	95-97	CR009		Single	CR005	CR013	
Tutti i tipi/All types/Tous types	97-99	CR009		Single			
1.5-1.6	83-92	CR008		Single	CR005	CR013	
PICKUP	97-99				CR013	CR005	
CADDY II Furgonato							
1.9 TDI	96-04	CR081		Single			
CADDY II Station Wagon							
1.9 TDI	96-04	CR081		Single			
CADDY III Furgonato							
1.4	04->	CR081		Single			

follow VOLKSWAGEN

MODELLO MODEL	ANNO YEAR	ANT I FRONT INNER	ANT E FRONT OUTER	NOTE NOTES	POST I REAR INNER	POST E REAR OUTER	NOTE NOTES
CADDY III Station Wagon							
1.4	04->	CR081		Single			
CORRADO							
1-8-2.0-2.9 VR6	89->	CR009		Single	CR005	CR006	
Magnum	91->	CR009		Single	CR005	CR006	
DERBY							
Tutti i tipi/All types/Tous types	77-85	CR019		Single	CR005	CR006	
GOLF							
1.1-1.3-1.6-1.8	74-83	CR008		Single	CR005	CR006	
1.1-1.3-1.6-1.8	83-87	CR015		Single	CR005	CR006	
1.3-1.6-1.8	87->	CR009		Single			
1.4-1.6-1.8-1.9	92->	CR009		Single	CR005	CR006	
2.0-2.8	92->	CR009		Single	CR005	CR006	
A3	91->	CR009		Single	CR005	CR006	
A3 16v-VR6	91->				CR005	CR006	
Cabrio	74-93	CR008		Single	CR005	CR006	
Cabrio	93->	CR009		Single	CR005	CR006	
GTI	91->	CR009		Single	CR005	CR006	
Syncro	85->	CR015		Single	CR007	CR007	
VARIANT	92->		CR009		CR005	CR006	
GOLF IV							
1.4 16V - 1.6	97-05	CR081		Single			
1.6 16V	00-05	CR081		Single			
1.6 FSI	02-05	CR081		Single			
1.8 - 1.8 T	97-05	CR081		Single			
1.8 4motion	98-05	CR081		Single			
1.8 T GTI	01-05	CR081		Single			
1.9 SDI - 1.9 TDI	97-05	CR081		Single			
1.9 TDI	00-05	CR081		Single			
1.9 TDI 4motion	98-05	CR081		Single			
2.0	98-05	CR081		Single			
2.0 4motion	00-05	CR081		Single			
2.3 V5	97-05	CR081		Single			
2.3 V5 4motion	98-05	CR081		Single			
2.8 V6 4motion	99-05	CR081		Single			
3.2 R32 4motion	02-05	CR081		Single			

follow VOLKSWAGEN

MODELLO MODEL	ANNO YEAR	ANT I FRONT INNER	ANT E FRONT OUTER	NOTE NOTES	POST I REAR INNER	POST E REAR OUTER	NOTE NOTES
GOLF IV Variant							
1.4 16V	99-06	CR081		Single			
1.6	99-06	CR081		Single			
1.6 16V	00-06	CR081		Single			
1.6 FSI	02-06	CR081		Single			
1.8 4motion	99-06	CR081		Single			
1.8 T	00-06	CR081		Single			
1.9 SDI - 1.9 TDI	99-06	CR081		Single			
1.9 TDI 4motion - 2.0	99-01	CR081		Single			
2.0 4motion	00-06	CR081		Single			
2.0 Bi-Fuel	02-06	CR081		Single			
2.3 V5 - 2.3 V5 4motion	99-06	CR081		Single			
2.8 V6 4motion	99-06	CR081		Single			
GOLF V							
1.4 16V	03->	CR081		Single			
JETTA							
Tutti i tipi/All types/Tous types	80-83	CR008		Single	CR005	CR006	
Tutti i tipi/All types/Tous types	83-87	CR015		Single	CR005	CR006	
Tutti i tipi/All types/Tous types	87->	CR009		Single			
Syncro	85->	CR015		Single	CR007	CR007	
Syncro	88->		CR009			CR007	
K 70							
Tutti i tipi/All types/Tous types	->73	CR001		Single	CR001		Single
Tutti i tipi/All types/Tous types	73->	CR001		Single	CR005	CR005	

follow VOLKSWAGEN

MODELLO MODEL	ANNO YEAR	ANT I FRONT INNER	ANT E FRONT OUTER	NOTE NOTES	POST I REAR INNER	POST E REAR OUTER	NOTE NOTES
LT							
LT28-LT28D	83->		CR005				
LT28-LT35-LT46	97-99	CR035					
LT31-LT31D	83->		CR005				
LT31-LT31D	91-96		CR005		CR051	CR051	
LT35-LT35D	83->		CR005				
LT40-LT40D	79-82		CR005		CR051	CR051	
LT40-LT40D	83->		CR005				
LT40-LT40D	79-82		CR005				
LT45-LT45D	79-82		CR005				
LT45-LT45D	79-82		CR005		CR051	CR051	
LT45-LT45D	83->		CR005				
LT50-LT50D	83->		CR005				
LT50-LT50D	79-82		CR005				
LT 28-35 II Autobus							
2.3	96->	CR068					
2.5 SDI	96->	CR068					
2.5 TDI	96->	CR068					
LT 28-46 II Furgonato							
2.3	96->	CR068					
2.5 SDI	96->	CR068					
2.5 TDI	96->	CR068					
2.8 TFI	97->	CR068					
LT 28-46 II Pianale piatto							
2.3	96->	CR068					
2.5 SDI	96->	CR068					
2.5 TDI	96->	CR068					
2.8 TDI	97->	CR068					
LUPO							
1.4 16V	98-05	CR081		Single			

follow VOLKSWAGEN

MODELLO MODEL	ANNO YEAR	ANT I FRONT INNER	ANT E FRONT OUTER	NOTE NOTES	POST I REAR INNER	POST E REAR OUTER	NOTE NOTES
MAGGIOLINO							
->ch.118857239	66-88	CR023	CR006				
1.2	78->	CR005	CR006				
1.3	65-68	CR023	CR006				
1.3	68-74	CR005	CR006				
1.5 TIPO 3	62-65	CR023	CR006				
1.5-1.6	68->	CR005	CR006				
1.6	66-68	CR023	CR006				
ch. 118857240->	68-74	CR005	CR006				
MINIBUS							
(RWD)	84-92		CR033				
NEW BEETLE							
1.4	01->	CR081		Single			
1.6 - 1.8 T	99->	CR081		Single			
1.9 TDI - 2.0	98->	CR081		Single			
2.3 V5	00->	CR081		Single			
2.5	05->	CR081		Single			
RSI 3.2	00-01	CR081		Single			
NEW BEETLE Cabriolet							
1.4 - 1.6 - 1.8 T - 1.9 TDI	03->	CR081		Single			
2.0	02->	CR081		Single			
2.5	05->	CR081		Single			

follow VOLKSWAGEN

MODELLO MODEL	ANNO YEAR	ANT I FRONT INNER	ANT E FRONT OUTER	NOTE NOTES	POST I REAR INNER	POST E REAR OUTER	NOTE NOTES
PASSAT							
Tutti i tipi/All types/Tous types	74-88	CR007		Single	CR005	CR006	
Tutti i tipi/All types/Tous types	88->	CR009		Single			
1.6 - 1.9 TDI	96-05	CR124		Single			
1.8 - 1.8 Syncro/4motion - 1.8 T - 2.3 VR5	96-00	CR124		Single			
1.8 T 20V - 2.0 - 2.0 4motion	00-05	CR124		Single			
1.9 TDI	98-00	CR081		Single			
1.9 TDI 4motion	99-00	CR081		Single			
1.9 TDI 4motion	99-05	CR124		Single			
1.9 TDI Syncro/4motion	97-00	CR124		Single			
2.3 V5 4motion - 2.5 TDI 4motion	00-05	CR124		Single			
2.3 VR5	96-00	CR081		Single			
2.3 VR5 Syncro/4motion	97-00	CR081		Single			
2.3 VR5 Syncro/4motion	97-00	CR124		Single			
2.5 TDI Syncro/4motion	98-00	CR124		Single			
2.8 4motion	00-05	CR124		Single			
2.8 V6 Syncro/4motion	96-00	CR124		Single			
Syncro	84->	CR007		Single	CR007		Single
PASSAT Variant							
1.6 - 1.9 TDI	97-05	CR124		Single			
1.8 - 1.8 Syncro/4motion - 1.8 T	97-00	CR124		Single			
1.9 TDI	98-00	CR081		Single			
1.9 TDI 4motion	99-05	CR124		Single			
1.9 TDI Syncro/4motion	97-00	CR124		Single			
2.0 - 2.0 4motion - 2.3 VR5 4motion	00-05	CR124		Single			
2.3 VR5	97-00	CR081		Single			
2.3 VR5 - 2.3 VR5Syncro/4motion	97-00	CR124		Single			
2.3 VR5 Syncro/4motion	97-00	CR081		Single			
2.3 VR5 Syncro/4motion	98-00	CR124		Single			
2.5 TDI 4motion - 2.8 4motion	00-05	CR124		Single			
2.8 V6 Synvcro/4motion	97-00	CR124		Single			
POLO							
Tutti i tipi/All types/Tous types	75->	CR019		Single	CR005	CR006	
Tutti i tipi/All types/Tous types	94->		CR015		CR005	CR006	
1.4 16V	99-01	CR081		Single			
1.9 TDI	01->	CR081		Single			

follow VOLKSWAGEN

MODELLO MODEL	ANNO YEAR	ANT I FRONT INNER	ANT E FRONT OUTER	NOTE NOTES	POST I REAR INNER	POST E REAR OUTER	NOTE NOTES
POLO Classic							
Tutti i tipi/All types/Tous types	96->		CR009		CR005	CR006	
100 1.6	95-01	CR081		Single			
110 1.9 TDI	98-01	CR081		Single			
68 1.9 SDI - 75 1.4 16V	99-01	CR081		Single			
90 1.9 TDI	96-01	CR081		Single			
POLO Variant							
1.4 16V	99-01	CR081		Single			
1.6	97-01	CR081		Single			
1.9 SDI	99-01	CR081		Single			
1.9 TDI	97-01	CR081		Single			
SANTANA							
Tutti i tipi/All types/Tous types	74-88	CR007		Single	CR005	CR006	
SCIROCCO							
Tutti i tipi/All types/Tous types	74->	CR008		Single	CR005	CR006	
SHARAN							
1.8 T 20V	97-10				CR125		Single
1.9 TDI	96-10				CR125		Single
1.9 TDI - 1.9 TDI 4motion	00-10	CR081		Single			
2.0	95-10				CR125		Single
2.0 LPG	06-10				CR125		Single
2.0 TDI	05-10				CR125		Single
2.8 V6 24V	00-10				CR125		Single
2.8 VR6	95-00				CR125		Single
TARO							
4x2	89->	CR022	CR024				

follow VOLKSWAGEN

MODELLO MODEL	ANNO YEAR	ANT I FRONT INNER	ANT E FRONT OUTER	NOTE NOTES	POST I REAR INNER	POST E REAR OUTER	NOTE NOTES
TRANSPORTER							
Tutti i tipi/All types/Tous types	63-67	CR014	CR013				
Tutti i tipi/All types/Tous types	67-70	CR014	CR013				
Tutti i tipi/All types/Tous types	70-80	CR014	CR013				
Tutti i tipi/All types/Tous types	80->		CR013				
1.2 t.	70-80		CR013				
1.2 t.	67-70		CR013				
BUS	68-79	CR014	CR013				
BUS	80-84		CR013				
BUS	84-90		CR033				
MINIBUS	80-94		CR013				
VENTO							
1.4-1.6-1.8-1.9-2.0	92->	CR009		Single	CR005	CR006	
2.0 GT-2.8	92->	CR009		Single	CR005	CR006	

VOLVO

MODELLO MODEL	ANNO YEAR	ANT I FRONT INNER	ANT E FRONT OUTER	NOTE NOTES	POST I REAR INNER	POST E REAR OUTER	NOTE NOTES
142							
Tutti i tipi/All types/Tous types	67-74	CR014	CR013				
144							
Tutti i tipi/All types/Tous types	66-74	CR014	CR013				
145							
Tutti i tipi/All types/Tous types	68-74	CR014	CR013				
240							
Tutti i tipi/All types/Tous types	75-80	CR013	CR014				
Tutti i tipi/All types/Tous types	81-93		CR034				
242							
Tutti i tipi/All types/Tous types	75-80	CR014	CR013				
244							
Tutti i tipi/All types/Tous types	75-80	CR014	CR013				

follow VOLVO

MODELLO MODEL	ANNO YEAR	ANT I FRONT INNER	ANT E FRONT OUTER	NOTE NOTES	POST I REAR INNER	POST E REAR OUTER	NOTE NOTES
245							
Tutti i tipi/All types/Tous types	75-80	CR014	CR013				
AMBULANCE	77-80		CR034				
T	77-80		CR034				
260							
Tutti i tipi/All types/Tous types	81-85		CR034				
264							
Tutti i tipi/All types/Tous types	75-80	CR014	CR013				
TE	77-80		CR034				
265							
Tutti i tipi/All types/Tous types	75-80	CR014	CR013				
340							
Tutti i tipi/All types/Tous types	83->	CR023	CR006				
Tutti i tipi/All types/Tous types	80-85		CR006				
Tutti i tipi/All types/Tous types	86-92	CR001		Single			
Automatic	79->	CR023	CR006				
343							
Tutti i tipi/All types/Tous types	75-80	CR023	CR006				
Tutti i tipi/All types/Tous types	80-85	CR023	CR006				
1.4	79-82	CR023	CR006				
343L-343DL	79->	CR023	CR006				
345							
Tutti i tipi/All types/Tous types	80-85	CR023	CR006				
1.4	80-82	CR023	CR006				
360							
Tutti i tipi/All types/Tous types	80-85	CR023	CR006				
Tutti i tipi/All types/Tous types	85->	CR023	CR006			CR001	
Tutti i tipi/All types/Tous types	86-92	CR001		Single			

follow VOLVO

MODELLO MODEL	ANNO YEAR	ANT I FRONT INNER	ANT E FRONT OUTER	NOTE NOTES	POST I REAR INNER	POST E REAR OUTER	NOTE NOTES
480							
ES	86-88	CR002		Single			
ES	88->	CR002		Single			
740							
Tutti i tipi/All types/Tous types	84-87		CR034				
2.0	83-92	CR074	CR074				
2.3	83-90	CR074	CR074				
2.3 Turbo	85-89	CR074	CR074				
2.4 Diesel	84-92	CR074	CR074				
2.4 TD	84-90	CR074	CR074				
740 Kombi							
2.0	85-92	CR074	CR074				
2.3	85-90	CR074	CR074				
2.3 Turbo	85-89	CR074	CR074				
2.4 Diesel	85-88	CR074	CR074				
2.4 TD Interc.	86-88	CR074	CR074				
2.4 Turbo-Diesel	85-92	CR074	CR074				
760							
2.3	84-87	CR074	CR074				
2.3 Turbo	82-88	CR074	CR074				
2.4 D	82-92	CR074	CR074				
2.4 Turbo Diesel	82-92	CR074	CR074				
2.8	81-91	CR074	CR074				
760 Kombi							
2.3 Turbo	84-90	CR074	CR074				
2.4 D	82-92	CR074	CR074				
2.8	84-91	CR074	CR074				
780							
Tutti i tipi/All types/Tous types	85-87		CR034				
2.9	86-87	CR074	CR074				
DAF							
66	72-80	CR023	CR006				

ZASTAVA							
MODELLO MODEL	**ANNO YEAR**	**ANT I FRONT INNER**	**ANT E FRONT OUTER**	**NOTE NOTES**	**POST I REAR INNER**	**POST E REAR OUTER**	**NOTE NOTES**
750							
Tutti i tipi/All types/Tous types	78-86	CR046	CR045			CR047	
850							
Tutti i tipi/All types/Tous types	78-86	CR046	CR045			CR047	
YUGO							
101	78-82	CR001		Single			
101	82-90	CR002		Single			
45-46	81-90	CR001		Single			

CUSCINETTI RUOTA
WHEEL BEARINGS
ROULEMENTS ROUES
DIMENSIONI – MEASURES – MESURE

DIMENSIONI Ø INT. Ø EST. H	CORAM
15x35x11,05	CR061
15x42x13	CR045
16,7x62x35	CR057
17,1x38x63	CR056
17,1x38x63	CR072
17,4x39,8x13,8	CR006
19,05x45,2x15,4	CR013
20x42x15	CR028
20x43x13,27	CR060
21,4x50x17,5	CR024
22x50x17,5	CR112
23x52x15	CR046
25x47x15	CR048
25x52x37	CR025
25x52x42	CR094
25x52x43	CR026
25x55x43	CR038
25x55x43	CR038/R
25x55x45	CR119
25x55x48	CR118
25x56x32	CR042
25x60x45	CR096
25x72x43	CR058
26,9x50,2x14,2	CR023
26x52x15	CR047
26x57,1x17,4	CR020
27x53x43	CR054
28x57,1x17,4	CR010
29x50,2x14,2	CR005
29x50,3x17,52	CR043
29x53x37	CR055
30x55x17,1	CR050
30x60x37	CR001
30x62x48	CR082
30x62x48	CR086
30x62x51	CR085

DIMENSIONI Ø INT. Ø EST. H	CORAM
30x65x21	CR003
30x72x19	CR044
30X72X25/28	CR041
31,7x59,1x15,8	CR014
33,35X76,20x29,55	CR065
34,93X76,20X29,55	CR064
34,9x65x18	CR022
34x62x37	CR019
34x64x37	CR008
34x66x37	CR021
34x67x37	CR114
35x60x15,8	CR011
35x60x16	CR074
35x61.8x40	CR113
35x65x35	CR030
35x66x33	CR017
35x66x33	CR102
35x66x37	CR015
35x68x37	CR002
35x72x17	CR027
35x72x33	CR018
35x72x33	CR099
35x72x33	CR103
37x72.03x37	CR075
37x72.03x37	CR076
37x72x22	CR092
37x72x33	CR062
37x72x33	CR095
37x72x37	CR016
37x74x37	CR101
38.1X70X37	CR067
38x69x34/39	CR122
38x70x38	CR079
38x71x39	CR126
38x72x33/36	CR059
38x74x33/36	CR053

DIMENSIONI Ø INT. Ø EST. H	CORAM
38x74x50	CR052
39x41x75x37	CR124
39x68x37	CR007
39x72,03x37	CR107
39X72X21,60	CR066
39x72x37	CR012
39x72x37	CR089
39x74x36	CR070
39x74x39	CR073
39x74x39	CR108
40x108x32	CR031
40x68x19	CR049
40x72x37	CR009
40x73x55	CR105
40x74x36	CR071
40x74x40	CR081
40x74x42	CR078
40x75x39	CR123
40x80x30,2	CR037
41,275x73,43x19,56	CR068
41,2x73,4x19,5	CR035
42x75x37	CR004
42x75x37	CR091
42x75x60	CR127
42x76x39	CR110
42x77x39	CR088
42x77x39	CR116
42x78x40	CR087
42x80x39	CR120
42x80x45	CR080
42x82,5x37	CR104
42x82x36	CR040
42x82x36	CR084
42x82x36	CR093
42x84x39	CR029
43x80x38	CR125

CUSCINETTI RUOTA
WHEEL BEARINGS
ROULEMENTS ROUES
DIMENSIONI – MEASURES – MESURE

DIMENSIONI Ø INT. Ø EST. H	CORAM
44X82,5X37	CR063
44x82,5x37	CR121
45,2x22x15,5	CR033
45,3x80x48	CR115
45,63x82,95x23,86	CR069
45x84x39	CR111
45x85x30	CR109
45x85x41	CR090
45x88x39	CR117
46x22x15,5	CR034
49x84x48	CR077
49x84x48	CR097
50x80x20	CR051
55x90x54	CR098
55x90x60	CR106
59,1x35x15,9	CR032

CUSCINETTI RUOTA
WHEEL BEARINGS
ROULEMENTS ROUES
LISTA DI COMPARAZIONE – CROSS REFERENCES – REFERENCES CROISEES

CORAM	APPLICATION	O.E.	DIMENSIONI	SKF	FAG	SNR	LORETT	IRB
CR001	FIAT	5937306	30x60x37	633313	529891	GB10790S05	C171	8040
CR001	FIAT	4178737	30x60x37	633313	529891	GB10790S05	C171	8040
CR001	LADA	21083104020	30x60x37	633313	529891	GB10790S05	C171	8040
CR001	LANCIA	5947834	30x60x37	633313	529891	GB10790S05	C171	8040
CR001	SEAT	X044438800	30x60x37	633313	529891	GB10790S05	C171	8040
CR002	FIAT/LANCIA	46439334	35x68x37	633295	541153	GB10840S02	C172	8026
CR002	FIAT/LANCIA	5941798	35x68x37	633295	541153	GB10840S02	C172	8026
CR002	FIAT/LANCIA	5987091	35x68x37	633295	541153	GB10840S02	C172	8026
CR002	FIAT/LANCIA	7634573	35x68x37	633295	541153	GB10840S02	C172	8026
CR002	SEAT/VW	X044193140	35x68x37	BAHB633967	541153	GB10840S02	C172	8026
CR002	TOFAS	46439334	35x68x37	633295	541153	GB10840S02	C172	8026
CR002	TOFAS	5941798	35x68x37	633295	541153	GB10840S02	C172	8026
CR002	TOFAS	5987091	35x68x37	633295	541153	GB10840S02	C172	8026
CR002	TOFAS	7634573	35x68x37	633295	541153	GB10840S02	C172	8026
CR003	FIAT	4438573	30x65x21	614593	522372		C165	8014
CR003	SEAT	JA14430100	30x65x21	630374	543909		C165	8014
CR004	ALFA	60554002	42x75x37	603694A	521771	GB12010	C034	8061
CR004	AUDI	443407625C	42x75x37	633196	533953	GB1210	C034	8061
CR004	BMW	31211130617	42x75x37	633457	545495D	GB1210	C034	8061
CR005	ALFA	60747301	29x50,2x14,2	331274	518772A		C048	2042
CR005	AUDI	311405625D-E	29x50,2x14,2	331274	518772A		C048	2042
CR005	BMW	31211101115	29x50,2x14,2	KLM45449/45410	518772A		C048	2042
CR005	FORD	72GB1200AA	29x50,2x14,2	BT1B328688AC/Q	518772A		C048	2042
CR005	OPEL	328022	29x50,2x14,2	331274	518772A		C048	2042
CR005	VOLKSWAGEN	311405625D	29x50,2x14,2	KLM45449+KLM45410	518772A		C048	2042
CR006	ALFA	60535941	17,4x39,8x13,8	KLM11749+KLM11710	506649		C046	2031
CR006	AUDI	311405645	17,4x39,8x13,8	KLM11749+KLM11710	506649		C046	2031
CR006	BMW	31212634104	17,4x39,8x13,8	KLM11749+KLM11710	506649		C046	2031
CR006	FORD	72GB1215AA	17,4x39,8x13,8	KLM11749+KLM11710	506649		C046	2031
CR006	MERCEDES	69811605	17,4x39,8x13,8	KLM11749+KLM11710	506649		C046	2031
CR006	OPEL	330011	17,4x39,8x13,8	KLM11749+KLM11710	506649		C046	2031
CR006	SEAT	311405645	17,4x39,8x13,8	KLM11749+KLM11710	506649		C046	2031
CR006	VOLVO	528996	17,4x39,8x13,8	KLM11749+KLM11710	506649		C046	2031
CR007	AUDI	811407625B-D	39x68x37	BAHB311315BD	540733		C302	8052
CR007	VOLKSWAGEN	811407625B-D	39x68x37	BAHB311315BD	528810		C302	8052
CR008	LADA	21083103020	34x64x37	309726DA	540466B	GB10884	C490	8041
CR008	OPEL	328104	34x64x37	309726DA	540466B	GB10884	C490	8041
CR008	VOLKSWAGEN	171407625A-C	34x64x37	309726DA	540466B	GB10884	C490	8041

CUSCINETTI RUOTA
WHEEL BEARINGS
ROULEMENTS ROUES
LISTA DI COMPARAZIONE – CROSS REFERENCES – REFERENCES CROISEES

CORAM	APPLICATION	O.E.	DIMENSIONI	SKF	FAG	SNR	LORETT	IRB
CR009	VOLKSWAGEN	357407625A	40x72x37	311443B	566719	GB12320S02	C632	8095
CR010	FIAT	4296782	28x57,1x17,4	639297	534662		C142	2036
CR010	SEAT	JA15830800	28x57,1x17,4	639297	534662		C142	2036
CR011	FORD	81AB1215AB	35x60x15,8	332541/VQ060	540484AH49A		C411	2043
CR012	BMW	33411124358	39x72x37	311396B	542186	GB12776	C491	8085
CR012	FORD	91AB1215AA	39x72x37	311396B	542186	GB12776	C491	8085
CR012	OPEL	328103	39x72x37	311396B	542186	GB12776	C491	8085
CR013	ALFA	60747299	19,05x45,2x15,4	KLM11949+KLM11910	505508		C064	2030
CR013	AUDI	211405645D	19,05x45,2x15,4	KLM11949+KLM11910	505508		C064	2030
CR013	BMW	31212634103	19,05x45,2x15,4	KLM11949+KLM11910	505508		C064	2030
CR013	FIAT	4096104	19,05x45,2x15,4	KLM11949+KLM11910	505508		C064	2030
CR013	FORD	81AB1238AA	19,05x45,2x15,4	KLM11949+KLM11910	505508		C064	2030
CR013	LADA	21013103025	19,05x45,2x15,4	KLM11949+KLM11910	505508		C064	2030
CR013	MERCEDES	9815905	19,05x45,2x15,4	KLM11949+KLM11910	505508		C064	2030
CR013	OPEL	330012	19,05x45,2x15,4	KLM11949+KLM11910	505508		C064	2030
CR013	SEAT	FA15824400	19,05x45,2x15,4	KLM11949+KLM11910	505508		C064	2030
CR013	VOLKSWAGEN	211405645D	19,05x45,2x15,4	KLM11949+KLM11910	505508		C064	2030
CR013	VOLVO	181586	19,05x45,2x15,4	KLM11949+KLM11910	505508		C064	2030
CR014	ALFA	60523334	31,7x59,1x15,8	KLM67048+KLM67010			C065	2050
CR014	BMW	31212634106	31,7x59,1x15,8	KLM67048+KLM67010			C065	2050
CR014	FIAT	4096101	31,7x59,1x15,8	KLM67048+KLM67010			C065	2050
CR014	FORD	81AB1238BA	31,7x59,1x15,8	KLM67048+KLM67010			C065	2050
CR014	MERCEDES	9815805	31,7x59,1x15,8	KLM67048+KLM67010			C065	2050
CR014	OPEL	328018	31,7x59,1x15,8	KLM67048+KLM67010			C065	2050
CR014	SEAT	GE15823600	31,7x59,1x15,8	KLM67048+KLM67010			C065	2050
CR014	SKODA	969300590	31,7x59,1x15,8	KLM67048+KLM67010			C065	2050
CR014	VOLKSWAGEN	211405625	31,7x59,1x15,8	KLM67048+KLM67010			C065	2050
CR014	VOLVO	181589	31,7x59,1x15,8	KLM67048+KLM67010			C065	2050
CR015	VOLKSWAGEN	191407625	35x66x37	311309	544307	GB12136	C630	8065
CR016	ALFA	60801380	37x72x37	633531B	562398	GB12131S03	C185	8066
CR016	FIAT	82390273	37x72x37	633531B	562398	GB12131S03	C185	8066
CR016	RENAULT	7703090353	37x72x37	633531B	562398	GB12131S03	C185	8066
CR017	FIAT	7558750	35x66x33	633676		GB12306S01	C199	8089
CR017	FIAT	46423870	35x66x33	633676		GB12306S01	C199	8089
CR018	FIAT	7555466	35x72x33	633669A		GB12862	C200	8055
CR018	FIAT	7555466	35x72x33	BAH0013		GB12862	C200	8094
CR018	PEUGEOT	3326.31	35x72x33	446762B		GB12862	C200	8055
CR018	PEUGEOT	3326.43	35x72x33	446762B		GB12862	C200	8055

CORAM	APPLICATION	O.E.	DIMENSIONI	SKF	FAG	SNR	LORETT	IRB
CR019	AUDI	861407625	34x62x37	BAHB311316B	561447		C300	8051
CR019	VOLKWAGEN	867407625A	34x62x37	309724	531910		C300	8051
CR020	FIAT	4009067	26x57,1x17,4	639154	512786		C121	2029
CR020	LADA	21013103020	26x57,1x17,4	639154	512786		C121	2029
CR021	OPEL	90447280	34x66x37	636114A	580400		C489	8622
CR021	OPEL	328106	34x66x37	636114A	580400		C489	8622
CR022	IVECO	4096587	34,9x65x18	KLM48548+KLM48510			C460	2052
CR022	MERCEDES	19802902	34,9x65x18	KLM48548+KLM48510			C460	2052
CR022	MERCEDES	9816405	34,9x65x18	KLM48548+KLM48510			C460	2052
CR022	MERCEDES	59817805	34,9x65x18	KLM48548+KLM48510			C460	2052
CR022	MERCEDES	59818005	34,9x65x18	KLM48548+KLM48510			C460	2052
CR022	MERCEDES	6089810205	34,9x65x18	KLM48548+KLM48510			C460	2052
CR022	NISSAN	40210-F1700	34,9x65x18	KLM48548+KLM48510			C460	2052
CR022	TOYOTA	90368-34020	34,9x65x18	KLM48548+KLM48510			C460	2052
CR023	ALFA	60724054	26,9x50,2x14,2	KLM44649+KLM44610	506650		C047	2026
CR023	ALFA	1,16002E+11	26,9x50,2x14,2	KLM44649+KLM44610	506650		C047	2026
CR023	BMW	0009801504.4	26,9x50,2x14,2	KLM44649+KLM44610	506650		C047	2026
CR023	BMW	2634105	26,9x50,2x14,2	KLM44649+KLM44610	506650		C047	2026
CR023	DAF	70528997	26,9x50,2x14,2	KLM44649+KLM44610	506650		C047	2026
CR023	DAIHATSU	90368-26013	26,9x50,2x14,2	KLM44649+KLM44610	506650		C047	2026
CR023	FORD	3024E1200A1	26,9x50,2x14,2	KLM44649+KLM44610	506650		C047	2026
CR023	FORD	527973	26,9x50,2x14,2	KLM44649+KLM44610	506650		C047	2026
CR023	MERCEDES	6089810305	26,9x50,2x14,2	KLM44649+KLM44610	506650		C047	2026
CR023	MITSUBISHI	MA125842	26,9x50,2x14,2	KLM44649+KLM44610	506650		C047	2026
CR023	MITSUBISHI	MA001835	26,9x50,2x14,2	KLM44649+KLM44610	506650		C047	2026
CR023	NISSAN	40210-A0800	26,9x50,2x14,2	KLM44649+KLM44610	506650		C047	2026
CR023	OPEL	328017	26,9x50,2x14,2	KLM44649+KLM44610	506650		C047	2026
CR023	ROVER	GHB-101	26,9x50,2x14,2	KLM44649+KLM44610	506650		C047	2026
CR023	SAAB	8906240	26,9x50,2x14,2	KLM44649+KLM44610	506650		C047	2026
CR023	TALBOT	203339D	26,9x50,2x14,2	KLM44649+KLM44610	506650		C047	2026
CR023	TALBOT	54381200	26,9x50,2x14,2	KLM44649+KLM44610	506650		C047	2026
CR023	TALBOT	4454381200	26,9x50,2x14,2	KLM44649+KLM44610	506650		C047	2026
CR023	TOYOTA	90368-26013	26,9x50,2x14,2	KLM44649+KLM44610	506650		C047	2026
CR023	TOYOTA	90368-26027	26,9x50,2x14,2	KLM44649+KLM44610	506650		C047	2026
CR023	VOLVO	528997	26,9x50,2x14,2	KLM44649+KLM44610	506650		C047	2026
CR023	VOLVO	183834	26,9x50,2x14,2	KLM44649+KLM44610	506650		C047	2026
CR024	DAF	37H6720	21,4x50x17,5	KLM12649+KM12610	507063		C461	2051
CR024	FIAT	4096591	21,4x50x17,5	KLM12649+KM12610	507063		C461	2051

CUSCINETTI RUOTA
WHEEL BEARINGS
ROULEMENTS ROUES
LISTA DI COMPARAZIONE – CROSS REFERENCES – REFERENCES CROISEES

CORAM	APPLICATION	O.E.	DIMENSIONI	SKF	FAG	SNR	LORETT	IRB
CR024	MERCEDES	9816305	21,4x50x17,5	KLM12649+KM12610	507063		C461	2051
CR024	MERCEDES	59817705	21,4x50x17,5	KLM12649+KM12610	507063		C461	2051
CR024	MERCEDES	59817905	21,4x50x17,5	KLM12649+KM12610	507063		C461	2051
CR024	NISSAN	40215-F1700	21,4x50x17,5	KLM12649+KM12610	507063		C461	2051
CR024	ROVER	607199	21,4x50x17,5	KLM12649+KM12610	507063		C461	2051
CR024	SAAB	8701906	21,4x50x17,5	KLM12649+KM12610	507063		C461	2051
CR024	SEAT	AC15824401	21,4x50x17,5	KLM12649+KM12610	507063		C461	2051
CR024	TOYOTA	90368-21065	21,4x50x17,5	KLM12649+KM12610	507063		C461	2051
CR025	CITROEN	95496453	25x52x37	BT2B445539AA	546467	FL12025-S01	C517	2220
CR025	CITROEN	9549645380	25x52x37	BT2B445539AA	546467	FL12025-S01	C517	2220
CR025	CITROEN	9559222680	25x52x37	BT2B445539AA	546467	FL12025-S01	C517	2220
CR025	CITROEN	95608940	25x52x37	BT2B445539AA	546467	FL12025-S01	C517	2220
CR025	PEUGEOT	373027	25x52x37	BT2B445539AA	546467	FL12025-S01	C517	2220
CR025	PEUGEOT	373021	25x52x37	BT2B445539AA	546467	FL12025-S01	C517	2220
CR025	PEUGEOT	4247.25	25x52x37	BT2B445539AA	546467	FL12025-S01	C517	2220
CR025	RENAULT	7703090253	25x52x37	BT2B445539AA	546467	FL12025-S01	C517	2220
CR025	RENAULT	7703090416	25x52x37	BT2B445539AA	546467	FL12025-S01	C517	2220
CR025	RENAULT	7703090434	25x52x37	BT2B445539AA	546467	FL12025-S01	C517	2220
CR025/R	VERSIONE DEL CR025 A RULLI CONICI - CR025 TAPER ROLLER BEARING VERSION							
CR026	RENAULT	7703090325	25x52x43			FC12180-S02	C564	2221
CR026	RENAULT	7703090434	25x52x43			FC12180-S02	C564	2221
CR027	RENAULT	7703090211	35x72x17	1861388	543772	10N6207F075E	C556	8017
CR028	CITROEN	7903090057	20x42x15	32004/VB014	535410	10R32004VC12UA	C395	2038
CR028	CITROEN	7910012338	20x42x15	32004/VB014	535410	10R32004VC12UA	C395	2038
CR028	PEUGEOT	235819	20x42x15	32004/VB014	535410	10R32004VC12UA	C395	2038
CR028	PEUGEOT	235817	20x42x15	32004/VB014	535410	10R32004VC12UA	C395	2038
CR028	PEUGEOT	9600067680	20x42x15	32004/VB014	535410	10R32004VC12UA	C395	2038
CR028	RENAULT	7703090266	20x42x15	32004/VB014	535410	10R32004VC12UA	C395	2038
CR028	RENAULT	7903090266	20x42x15	32004/VB014	535410	10R32004VC12UA	C395	2038
CR028	TALBOT	7903090003	20x42x15	32004/VB014	535410	10R32004VC12UA	C395	2038
CR029	RENAULT	7703090199	42x84x39	440090	543359B	GB10702S03	C558	8101
CR030	RENAULT	7703090283	35x65x35	445620BA	546238A	FC12033S03	C559	8042
CR030	RENAULT	7703090283	35x65x35	445620BA	546238A	FC12438	C559	8042
CR030/R	VERSIONE DEL CR030 A RULLI CONICI - CR030 TAPER ROLLER BEARING VERSION							
CR031	RENAULT	7703090222	40x108x32	4010832		TGB10872S02	C557	8048
CR031	RENAULT	7703090222	40x108x32	BA2B445533A		TGB10872S02	C557	8048
CR032	BMW	31211106033	59,1x35x15,9	KL68149+KL68110			C370	
CR033	BMW	31211106032	45,2x22x15,5	KLM12749+KLM12710			C371	

CUSCINETTI RUOTA
WHEEL BEARINGS
ROULEMENTS ROUES
LISTA DI COMPARAZIONE – CROSS REFERENCES – REFERENCES CROISEES

CORAM	APPLICATION	O.E.	DIMENSIONI	SKF	FAG	SNR	LORETT	IRB
CR033	MERCEDES	9809302	45,2x22x15,5	KLM12749+KLM12710			C371	
CR033	VOLKWAGEN	251405645B	45,2x22x15,5	KLM12749+KLM12710			C371	
CR034	CITROEN	2-620435-9	46x22x15,5	KLM12749+KLM12711			C651	
CR034	CITROEN	2-620704-9D	46x22x15,5	KLM12749+KLM12711			C651	
CR034	VOLVO	18074	46x22x15,5	KLM12749+KLM12711			C651	
CR034	VOLVO	18071+18070	46x22x15,5	KLM12749+KLM12711			C651	
CR034	VOLVO	184071+184070	46x22x15,5	KLM12749+KLM12711			C651	
CR035	ALFA	1,05642E+11	41,2x73,4x19,5	KLM501349+KLM501310			C030	2040
CR035	ALFA	60506908	41,2x73,4x19,5	KLM501349+KLM501310			C030	2040
CR035	BMW	33131205124	41,2x73,4x19,5	KLM501349+KLM501310			C030	2040
CR035	FIAT	82047034	41,2x73,4x19,5	KLM501349+KLM501310			C030	2040
CR035	MERCEDES	19806202	41,2x73,4x19,5	KLM501349+KLM501310			C030	2040
CR035	MERCEDES	19806302	41,2x73,4x19,5	KLM501349+KLM501310			C030	2040
CR035	MERCEDES	6089810005	41,2x73,4x19,5	KLM501349+KLM501310			C030	2040
CR035	VOLKSWAGEN	16409123	41,2x73,4x19,5	KLM501349+KLM501310			C030	2040
CR037	PEUGEOT	3326.12	40x80x30,2	440320H	523854	Y44-FB10394S02	C510	8006
CR037	PEUGEOT	3326.20	40x80x30,2	440320H	523854	Y44-FB10394S02	C510	8006
CR037	PEUGEOT	13881300	40x80x30,2	440320H	523854	Y44-FB10394S02	C510	8006
CR037	PEUGEOT	3326.29	40x80x30,2	440320H	523854	Y44-FB10394S02	C510	8006
CR037	PEUGEOT	3233.6Y	40x80x30,2	440320H	523854	Y44-FB10394S02	C510	8006
CR037	TALBOT	3236.64	40x80x30,2	440320H	523854	Y44-FB10394S02	C510	8006
CR037	TALBOT	323629	40x80x30,2	440320H	523854	Y44-FB10394S02	C510	8006
CR037	TALBOT	32366Y	40x80x30,2	440320H	523854	Y44-FB10394S02	C510	8006
CR037	TALBOT	13881300	40x80x30,2	440320H	523854	Y44-FB10394S02	C510	8006
CR037	TALBOT	4412860100	40x80x30,2	440320H	523854	Y44-FB10394S02	C510	8006
CR038	RENAULT	7703090365	25x55x43			FC12271	C572	2222
CR038/R	DACIA / RENAULT	7701210004	25x55x43	VKBA6658		R155.88		
CR038/R	RENAULT	8200600646	25x55x43	VKBA6658		R155.88		
CR038/R	VERSIONE DEL CR038 A RULLI CONICI - CR038 TAPER ROLLER BEARING VERSION		25x55x43					
CR040	CITROEN	95590022	42x82x36	446047CA	561481	GB12163S04	C401	8086
CR040	PEUGEOT	332633	42x82x36	446047CA	561481	GB12163S04	C401	8086
CR040	PEUGEOT	9559002280	42x82X36	446047CA	561481	GB12163S04	C401	8086
CR041	HILLMAN - PEYKAN	411280	30X72X25/28					
CR042	CITROEN-PEUGEOT	95030243	25x56x32	BAH5000			C388	8520
CR042	CITROEN-PEUGEOT	95030243	25x56x32	445879AC			C388	8520
CR043	FORD	89FB1238AC	29x50,3x17,52	BT1B329013A/Q			C426	2562
CR043	FORD	6199622	29x50,3x17,52	BT1B329013A/Q			C426	2562
CR044	ALFA	60524746	30x72x19	616480B	532333		C450	8100

CUSCINETTI RUOTA
WHEEL BEARINGS
ROULEMENTS ROUES
LISTA DI COMPARAZIONE – CROSS REFERENCES – REFERENCES CROISEES

CORAM	APPLICATION	O.E.	DIMENSIONI	SKF	FAG	SNR	LORETT	IRB
CR044	LADA	21012403080	30x72x19	616480B	532333		C450	8100
CR044	LADA	21202403080	30x72x19	616480B	6306.2RSLHT23		C450	8100
CR045	FIAT	336658	15x42x13	639213	509764A		C102	2021
CR045	FIAT	46576155	15x42x13	639213	509764A		C102	2021
CR045	SEAT	BA15823700	15x42x13	639213	509764A		C102	2021
CR045	ZASTAVA	336658	15x42x13	639213	509764A		C102	2021
CR046	FIAT	60055388	23x52x15	639175	50970A		C183	2024
CR046	SEAT	BA15823600	23x52x15	639175	50970A		C183	2024
CR046	ZASTAVA	60055388	23x52x15	639175	50970A		C183	2024
CR047	FIAT	46576148	26x52x15	44645+44613	509592A		C107	2022
CR047	FIAT	804862	26x52x15	44645+44613	509592A		C107	2022
CR047	SEAT	BA14902300	26x52x15	639174	509592A		C107	2022
CR047	ZASTAVA	804862	26x52x15	639174	509592A		C107	2022
CR048	CITROEN	7903090058	25x47x15	32005/VB015	535411	10R32005VC12UA	C393	2037
CR048	PEUGEOT	237217	25x47x15	32005/VB015	535411	10R32005VC12UA	C393	2037
CR048	PEUGEOT	237219	25x47x15	32005/VB015	535411	10R32005VC12UA	C393	2037
CR048	PEUGEOT	237220	25x47x15	32005/VB015	535411	10R32005VC12UA	C393	2037
CR048	PEUGEOT	373015	25x47x15	32005/VB015	535411	10R32005VC12UA	C393	2037
CR048	PEUGEOT	373016	25x47x15	32005/VB015	535411	10R32005VC12UA	C393	2037
CR048	RENAULT	7903090267	25x47x15	32005/VB015	535411	10R32005VC12UA	C393	2037
CR048	TALBOT	7703090267	25x47x15	32005/VB015	535411	10R32005VC12UA	C393	2037
CR048	TALBOT	7903090002	25x47x15	32005/VB015	535411	10R32005VC12UA	C393	2037
CR048	TALBOT	7910012339	25x47x15	32005/VB015	535411	10R32005VC12UA	C393	2037
CR049	FIAT	24903810	40x68x19	32008X			C451	2524
CR049	LADA	21213103020.10	40x68x19	32008X			C451	2524
CR049	PEUGEOT	234714	40x68x19	32008X			C451	2524
CR049	RENAULT	7703090034	40x68x19	32008X			C451	2524
CR049	VOLKWAGEN	19409123	40x68x19	32008X			C451	2524
CR050	ALFA	530304	30x55x17,1	32006X	32006F121	32006C	C073	2522
CR050	ALFA	530306	30x55x17,1	32006X	32006F121	32006C	C073	2522
CR050	ALFA	531444	30x55x17,1	32006X	32006F121	32006C	C073	2522
CR050	ALFA	60502732	30x55x17,1	32006X	32006F121	32006C	C073	2522
CR050	CITROEN	373515	30x55x17,1	32006X	32006F121	32006C	C073	2522
CR050	FIAT	4470124	30x55x17,1	32006X	32006F121	32006C	C073	2522
CR050	PEUGEOT	373515	30x55x17,1	32006X	32006F121	32006C	C073	2522
CR050	VOLKSWAGEN	291407645	30x55x17,1	32006X	32006F121	32006C	C073	2522
CR051	CITROEN	ZF04330647	50x80x20	32010X/QVB026	533060	10R32010A	C210	2526
CR051	FIAT	4330647	50x80x20	32010X/QVB026	533060	10R32010A	C210	2526

CUSCINETTI RUOTA
WHEEL BEARINGS
ROULEMENTS ROUES
LISTA DI COMPARAZIONE – CROSS REFERENCES – REFERENCES CROISEES

CORAM	APPLICATION	O.E.	DIMENSIONI	SKF	FAG	SNR	LORETT	IRB
CR051	PEUGEOT	3326.27	50x80x20	32010X/QVB026	533060	10R32010A	C210	2526
CR051	VOLKSWAGEN	91517185	50x80x20	32010X/QVB026	533060	10R32010A	C210	2526
CR052	NISSAN		38x74x50		559192			8651
CR053	NISSAN		38x74x33/36					8698
CR053	TOYOTA		38x74x33/36					8698
CR054	OPEL	DU2753	27x53x43					
CR055	FORD	301023AA	29x53x37		301023AA			
CR055/R	VERSIONE DEL CR055 A RULLI CONICI - CR055 TAPER ROLLER BEARING VERSION							
CR056	MAZDA	B00133047	17,1x38x63				CR7054	2503
CR056	MAZDA	B00133042	17,1x38x63				CR7054	2503
CR056	MAZDA	B21033065	17,1x38x63				CR7054	2503
CR056	MAZDA	B00133049	17,1x38x63				CR7054	2503
CR056	MAZDA	B21033067	17,1x38x63				CR7054	2503
CR056	TOYOTA	9036838001	17,1x38x63				CR7054	2503
CR057	FORD	LM78349/78310	16,7x62x35			LM78349/78310		
CR058	RENAULT		25x72x43					
CR059	TOYOTA	3872W-8C581	38x72x33/36					
CR060	FIAT	985778	20x43x13,27	639177	509845		C119	
CR061	FIAT	336501	15x35x11,05	639209	529901		C101	
CR062	CITROEN/PEUGEOT	3350.32S	37x72x33	BAH0051B		GB40547	C304	8740
CR063	CITROEN/PEUGEOT	332604	44X82,5X37			GB40246	C220	
CR063	FIAT	1330512080	44X82,5X37			GB40246	C220	
CR063	FIAT/LANCIA	1311506080	44X82,5X37			GB40246	C220	
CR064			34,93X76,20X29,55	639338		F-639338		
CR065			33,35X76,20x29,55	639337		F-639337		
CR066			39X72X21,60	639330		C-639330A/Q		
CR067	HYUNDAI	51720-11101	38.1X70X37	BAHB636193C				
CR067	HYUNDAI	51720-25000	38.1X70X37	BAHB636193C				
CR067	HYUNDAI	51720-29100	38.1X70X37	BAHB636193C				
CR067	HYUNDAI	51720-29300	38.1X70X37	BAHB636193C				
CR067	HYUNDAI	51720-29400	38.1X70X37	BAHB636193C				
CR067	HYUNDAI	51730-11101	38.1X70X37	BAHB636193C				
CR067	HYUNDAI	51720-02000	38.1X70X37	BAHB636193C				
CR067	HYUNDAI	51720-29150	38.1X70X37	BAHB636193C				
CR068	MERCEDES-BENZ	19806202	41,275x73,43x19,56	KLM501349+KLM501310				2040
CR068	MERCEDES-BENZ	19806302	41,275x73,43x19,56	KLM501349+KLM501310				2040
CR068	MERCEDES-BENZ	6089810005	41,275x73,43x19,56	KLM501349+KLM501310				2040
CR068	VAG	16409123	41,275x73,43x19,56	KLM501349+KLM501310				2040

CORAM	APPLICATION	O.E.	DIMENSIONI	SKF	FAG	SNR	LORETT	IRB
CR069			45,63x82,95x23,86	25590/20				
CR070	HYUNDAI	51720-2D000	39x74x36			R184.13		
CR071	RENAULT/SAMSUNG/MOTOR	42160-31010	40x74x36	BAH0060				
CR072	OPEL/G.M/FIAT/FORD		17,1x38x63	KJL69349/69310		JL69349/10		
CR073	GENERAL MOTORS	90425658	39x74x39	636096A			C488	
CR073	OPEL	0328105	39x74x39	636096A			C488	
CR073	OPEL	328105	39x74x39	636096A			C488	
CR073	SAAB	4242202	39x74x39	636096A			C488	
CR073	SAAB	4689923	39x74x39	636096A			C488	
CR074	DAEWOO	96285525	35x60x16	KL68149+L68111			C650	
CR074	VOLVO	183576+183577	35x60x16	KL68149+L68111			C650	
CR075	DACIA / RENAULT	6001547686	37x72.03x37			R155.80		
CR075	RENAULT	8200339531	37x72.03x37			R155.80		
CR076	DACIA / RENAULT	6001550915	37x72.03x37			R155.75		
CR076	DACIA / RENAULT	7701207677	37x72.03x37			R155.75		
CR076	NISSAN	40210-AX000	37x72.03x37			R155.75		
CR076	RENAULT	6040000570	37x72.03x37			R155.75		
CR077	CITROEN / PEUGEOT	332662	49x84x48	BTHB329129		R140.17		
CR077	FIAT	1328046080	49x84x48	BTHB329129		R140.17		
CR077	FIAT	1346651080	49x84x48	BTHB329129		R140.17		
CR077	FIAT	1347527080	49x84x48	BTHB329129		R140.17		
CR078	TOYOTA	90521-79002	40x74x42				CR7035	
CR078	TOYOTA	90363-40066	40x74x42				CR7035	
CR078	TOYOTA	90177-22001	40x74x42				CR7035	
CR078	TOYOTA	04422-20010	40x74x42				CR7035	
CR078	TOYOTA	90369-38003	40x74x42				CR7035	
CR079	DAIHATSU	43246-87702	38x70x38				CR7095	
CR079	DAIHATSU	90043-63188	38x70x38				CR7095	
CR079	DAIHATSU	90045-21111	38x70x38				CR7095	
CR080	MAZDA	FB01-26-151B	42x80x45	VKBA6972				
CR080	MAZDA	FB01-26-151C	42x80x45	VKBA6972				
CR080	MAZDA	GA24-33-047	42x80x45	VKBA6972				
CR080	MAZDA	GE4T-33-048	42x80x45	VKBA6972				
CR080	MAZDA	GEAT-33-048	42x80x45	VKBA6972				
CR080	MAZDA	FB01-26-151E	42x80x45	VKBA6972				
CR081	AUDI	1J0407625	40x74x40					
CR081	SEAT	1J0407625	40x74x40					
CR081	SKODA	1J0407625	40x74x40					

CORAM	APPLICATION	O.E.	DIMENSIONI	SKF	FAG	SNR	LORETT	IRB
CR081	VOLKSWAGEN	1J0407625	40x74x40					
CR082	DACIA	6001548986	30x62x48			R155.89		
CR084	CITROEN	1606623580	42x82x36	BAH-0186A				
CR084	CITROEN	1606623580	42x82x36	VKBA3584				
CR084	CITROEN	3350.84	42x82x36	BAH-0186A				
CR084	CITROEN	3350.84	42x82x36	VKBA3584				
CR084	CITROEN/PEUGEOT	3350.69	42x82x36	BAH-0186A				
CR084	CITROEN/PEUGEOT	3350.69	42x82x36	VKBA3584				
CR084	CITROEN/PEUGEOT	3350.97	42x82x36	BAH-0186A				
CR084	CITROEN/PEUGEOT	3350.97	42x82x36	VKBA3584				
CR084	PEUGEOT	1606623580	42x82x36	BAH-0186A				
CR084	PEUGEOT	1606623580	42x82x36	VKBA3584				
CR085	CITROEN/PEUGEOT	3748.94	30x62x51	VKBA6549		FC41394		
CR086	CITROEN/PEUGEOT	3748.90	30x62x48	VKBA6544		FC41645		
CR087	HYUNDAI	51720-2H000	42x78x40			CR7678		
CR087	HYUNDAI/KIA	51718-2H000	42x78x40			CR7678		
CR087	HYUNDAI/KIA	51720-2K000	42x78x40			CR7678		
CR087	HYUNDAI/KIA	51755-1H000	42x78x40			CR7678		
CR087	HYUNDAI/KIA	51720-0Q000	42x78x40			CR7678		
CR088	RENAULT	6040005585	42x77x39			XGB41930		
CR088	RENAULT	8200893832	42x77x39			XGB41930		
CR089	FORD	1085569	39x72x37			R152.55		
CR089	FORD	1112547	39x72x37			R152.55		
CR089	FORD	1201569	39x72x37			R152.55		
CR089	FORD	2S6J1K018BA	39x72x37			R152.55		
CR089	FORD	98AX1K018BB	39x72x37			R152.55		
CR090	BMW	6762321-06	45x85x41					
CR090	BMW	33416762321	45x85x41					
CR090	BMW	33416775842	45x85x41					
CR091	BMW	33416762317	42x75x37					
CR091	BMW	33417749628	42x75x37					
CR092	CITROEN/PEUGEOT	3350.86	37x72x22					
CR092	CITROEN/PEUGEOT	3350.92	37x72x22					
CR093	CITROEN/PEUGEOT	3350.69	42x82x36					
CR093	CITROEN/PEUGEOT	3350.84	42x82x36					
CR093	CITROEN/PEUGEOT	1606623580	42x82x36					
CR094	CITROEN/PEUGEOT	3748A1	25x52x42					
CR095	CITROEN/PEUGEOT	335032	37x72x33					

CORAM	APPLICATION	O.E.	DIMENSIONI	SKF	FAG	SNR	LORETT	IRB
CR095	CITROEN/PEUGEOT	335032	37x72x33					
CR095	CITROEN/PEUGEOT	335032	37x72x33					
CR096	CITROEN/PEUGEOT	374883	25x60x45					
CR096	CITROEN/PEUGEOT	374883	25x60x45					
CR097	CITROEN	3326.70	49x84x48					
CR097	CITROEN/PEUGEOT	1606375080	49x84x48					
CR097	CITROEN/PEUGEOT	3326.62	49x84x48					
CR097	CITROEN/PEUGEOT	3326.73	49x84x48					
CR097	FIAT	1328046080	49x84x48					
CR097	FIAT	1346651080	49x84x48					
CR097	FIAT	1347527080	49x84x48					
CR097	FIAT	71753809	49x84x48					
CR098	CITROEN	1606374680	55x90x54					
CR098	CITROEN/PEUGEOT	3326.71	55x90x54					
CR098	FIAT	51745702	55x90x54					
CR098	IVECO	5801564346	55x90x54					
CR099	ALFA ROMEO	46773662	35x72x33					
CR099	ALFA ROMEO	60815902	35x72x33					
CR099	CITROEN	332675	35x72x33					
CR099	CITROEN	332677	35x72x33					
CR099	FIAT/LANCIA	71714457	35x72x33					
CR099	FORD	1587565	35x72x33					
CR099	FORD	9551J1K018BA	35x72x33					
CR101	FIAT	46836196	37x74x37					
CR101	FIAT	46836198	37x74x37					
CR101	FIAT	71753820	37x74x37					
CR101	FIAT	92403013	37x74x37					
CR101	OPEL/VAUXHALL	328011	37x74x37					
CR101	OPEL/VAUXHALL	328023	37x74x37					
CR101	OPEL/VAUXHALL	95511623	37x74x37					
CR101	OPEL/VAUXHALL	95513921	37x74x37					
CR102	FIAT	46531160	35x66x33					
CR102	FIAT	51856892	35x66x33					
CR102	FIAT	71714458	35x66x33					
CR102	FORD	1541807	35x66x33					
CR102	FORD	1587548	35x66x33					
CR103	ALFA ROMEO/FIAT/LANCIA	46528566	35x72x33					
CR103	ALFA ROMEO/FIAT/LANCIA	46773659	35x72x33					

CORAM	APPLICATION	O.E.	DIMENSIONI	SKF	FAG	SNR	LORETT	IRB
CR103	ALFA ROMEO/FIAT/LANCIA	7555466	35x72x33					
CR103	FIAT	46423871	35x72x33					
CR103	FIAT	755466	35x72x33					
CR103	FIAT	71714468	35x72x33					
CR103	FORD	7555466	35x72x33					
CR104	FIAT	46836200	42x82,5x37					
CR104	FIAT	51810364	42x82,5x37					
CR104	FIAT	71729124	42x82,5x37					
CR104	FIAT/LANCIA	50700495	42x82,5x37					
CR104	FIAT/LANCIA	71753821	42x82,5x37					
CR104	OPEL	328026	42x82,5x37					
CR104	OPEL/VAUXHALL	95513922	42x82,5x37					
CR105	IVECO	42470840	40x73x55					
CR105	IVECO	42470845	40x73x55					
CR105	IVECO	503642698	40x73x55					
CR105	IVECO	504132172	40x73x55					
CR105	IVECO	504164177	40x73x55					
CR105	IVECO	504166117	40x73x55					
CR105	IVECO	504166122	40x73x55					
CR105	IVECO	504288649	40x73x55					
CR105	IVECO	5801341526	40x73x55					
CR105	IVECO	93824579	40x73x55					
CR105	IVECO	93824579	40x73x55					
CR105	IVECO	93824580	40x73x55					
CR105	IVECO	93825736	40x73x55					
CR105	IVECO	99825736	40x73x55					
CR105	IVECO	BTH1024C	40x73x55					
CR106	IVECO	42558516	55x90x60					
CR106	IVECO	46393024	55x90x60					
CR106	IVECO	503644252	55x90x60					
CR106	IVECO	7180066	55x90x60					
CR106	IVECO	7187566	55x90x60					
CR106	IVECO	7189750	55x90x60					
CR106	NISSAN	43210LC42A	55x90x60					
CR106	RENAULT/RENAULT TRUCKS	7485139097	55x90x60					
CR107	FORD	2S6W1215AA	39x72,03x37					
CR107	MAZDA	D35033047A	39x72,03x37					
CR107	MAZDA	D35033047B	39x72,03x37					

CORAM	APPLICATION	O.E.	DIMENSIONI	SKF	FAG	SNR	LORETT	IRB
CR108	FORD	1484266	39x74x39					
CR108	FORD	1484269	39x74x39					
CR108	FORD	2T141215BA	39x74x39					
CR108	FORD	2T141K018AA	39x74x39					
CR108	FORD	2T141K018AB	39x74x39					
CR108	FORD	2T141K018BA	39x74x39					
CR108	FORD	2T141K018BB	39x74x39					
CR108	FORD	4366990	39x74x39					
CR108	FORD	4410218	39x74x39					
CR108	FORD	4410219	39x74x39					
CR108	FORD	4242202	39x74x39					
CR108	FORD	4689923	39x74x39					
CR109	FORD	5025900	45x85x30					
CR109	FORD	6765406	45x85x30					
CR109	FORD	92VB1225BA	45x85x30					
CR109	FORD	92VX1A049AA	45x85x30					
CR109	FORD	DAC458500302	45x85x30					
CR110	CHRYSLER	4670292AF	42x76x39					
CR110	FORD	E6DC1215AA	42x76x39					
CR110	FORD	E6DZ1215A	42x76x39					
CR110	FORD	E9DC1215AA	42x76x39					
CR110	FORD	E9DZ1215A	42x76x39					
CR110	FORD	F1DC1215AA	42x76x39					
CR110	FORD	F1SZ1215A	42x76x39					
CR110	HYUNDAI	5271026500	42x76x39					
CR110	HYUNDAI / KIA	517202J001	42x76x39					
CR110	HYUNDAI / KIA	5271026510	42x76x39					
CR110	HYUNDAI / KIA	5271026530	42x76x39					
CR110	JOHN DEERE	AE49211	42x76x39					
CR110	KIA	5,03E+107	42x76x39					
CR110	KIA	5,03E+205	42x76x39					
CR110	KIA	51720FL047	42x76x39					
CR110	KIA	0K56B33047	42x76x39					
CR110	KIA	0K55233047	42x76x39					
CR110	KIA	0K56B33047	42x76x39					
CR110	KIA	5,03E+106	42x76x39					
CR111	MERCEDES-BENZ	1699810006	45x84x39					
CR111	MERCEDES-BENZ	1699810127	45x84x39					

CORAM	APPLICATION	O.E.	DIMENSIONI	SKF	FAG	SNR	LORETT	IRB
CR112	MERCEDES-BENZ	A0029803102	22x50x17,5					
CR112	MERCEDES-BENZ	29803102	22x50x17,5					
CR112	MERCEDES-BENZ	A0029803102	22x50x17,5					
CR112	MERCEDES-BENZ	29803102	22x50x17,5					
CR113	OPEL/VAUXHALL	4700322	35x61.8x40					
CR113	OPEL/VAUXHALL	9203934	35x61.8x40					
CR114	OPEL	328980	34x67x37					
CR114	OPEL/VAUXHALL	9195608	34x67x37					
CR114	OPEL/VAUXHALL	93362342	34x67x37					
CR115	NISSAN	4321000Q0K	45,3x80x48					
CR115	NISSAN	4321000QAB	45,3x80x48					
CR115	OPEL/VAUXHALL	4403044	45,3x80x48					
CR115	OPEL/VAUXHALL	9111044	45,3x80x48					
CR115	RENAULT	7701206742	45,3x80x48					
CR116	RENAULT	7701207676	42x77x39					
CR116	RENAULT	7701210111	42x77x39					
CR117	NISSAN	4021000Q0E	45x88x39					
CR117	NISSAN	4021000QAG	45x88x39					
CR117	NISSAN	4021000QAK	45x88x39					
CR117	OPEL	4451762	45x88x39					
CR117	OPEL	90198742	45x88x39					
CR117	OPEL/VAUXHALL	4412598	45x88x39					
CR117	OPEL/VAUXHALL	4430305	45x88x39					
CR117	OPEL/VAUXHALL	93161059	45x88x39					
CR117	OPEL/VAUXHALL	93161376	45x88x39					
CR117	RENAULT	402109697R	45x88x39					
CR117	RENAULT	7701207358	45x88x39					
CR117	RENAULT	7701207966	45x88x39					
CR117	RENAULT	7701208427	45x88x39					
CR118	RENAULT	7701208059	25x55x48					
CR119	RENAULT	7701208058	25x55x45					
CR119	RENAULT	7701209540	25x55x45					
CR120	RENAULT	402107049R	42x80x39					
CR120	RENAULT	402108022R	42x80x39					
CR121	ALFA ROMEO/FIAT/LANCIA	1326188080	44x82,5x37					
CR121	ALFA ROMEO/FIAT/LANCIA	71731547	44x82,5x37					
CR121	ALFA ROMEO/FIAT/LANCIA	71752156	44x82,5x37					
CR121	LAND ROVER	LR041425	44x82,5x37					

CORAM	APPLICATION	O.E.	DIMENSIONI	SKF	FAG	SNR	LORETT	IRB
CR121	LAND ROVER	RFC000010	44x82,5x37					
CR121	ROVER/LAND ROVER	GHK1692	44x82,5x37					
CR121	ROVER/LAND ROVER	RUD100150	44x82,5x37					
CR122	CITROEN	1610911480	38x69x34/39					
CR122	CITROEN	1610911480SK	38x69x34/39					
CR122	CITROEN	1610911480	38x69x34/39					
CR122	CITROEN	1610911480SK	38x69x34/39					
CR122	CITROEN/PEUGEOT	6822.JL	38x69x34/39					
CR122	CITROEN/PEUGEOT	6822.JL	38x69x34/39					
CR122	TOYOTA	90369-W0001	38x69x34/39					
CR122	TOYOTA	90369-W0001	38x69x34/39					
CR123	DAIHATSU/TOYOTA	90363W0005	40x75x39					
CR123	TOYOTA	6040100283	40x75x39					
CR123	TOYOTA	9036340079	40x75x39					
CR123	TOYOTA	90363T0023	40x75x39					
CR123	TOYOTA	90363W0006	40x75x39					
CR124	AUDI	8D0598625A	39x41x75x37					
CR124	AUDI/SKODA/VW	4B0498625	39x41x75x37					
CR124	AUDI/VW	893498625	39x41x75x37					
CR124	AUDI/VW	893498625A	39x41x75x37					
CR124	AUDI/VW	893498625B	39x41x75x37					
CR124	AUDI/VW	893498625D	39x41x75x37					
CR124	AUDI/VW	8D0498625	39x41x75x37					
CR124	VW	893407625	39x41x75x37					
CR124	VW	893407625C	39x41x75x37					
CR124	VW	V893407625G	39x41x75x37					
CR125	FORD	1001719	43x80x38					
CR125	FORD	1104362	43x80x38					
CR125	FORD	1497387	43x80x38					
CR125	FORD	1497388	43x80x38					
CR125	FORD	1K040AA	43x80x38					
CR125	FORD	6M211A049AA	43x80x38					
CR125	FORD	6M211K040AA	43x80x38					
CR125	FORD	7201008	43x80x38					
CR125	FORD	95VW1A049AB	43x80x38					
CR125	FORD	95VW1K040AA	43x80x38					
CR125	VW	7M0407625	43x80x38					
CR125	VW	7M3598625	43x80x38					

CORAM	APPLICATION	O.E.	DIMENSIONI	SKF	FAG	SNR	LORETT	IRB
CR126	TOYOTA	90369-38022	38x71x39					
CR126	TOYOTA	90080-36108	38x71x39					
CR126	TOYOTA	90080-36178	38x71x39					
CR126	TOYOTA	90369-38021	38x71x39					
CR126	TOYOTA	90369-38022	38x71x39					
CR127	ALFA ROMEO/FIAT/LANCIA	1328029080	42x75x60					
CR127	CITROEN/PEUGEOT	373032	42x75x60					
CR127	FIAT	71753818	42x75x60					

ALFA	CORAM
1,05642E+11	CR035
1,16002E+11	CR023
530304	CR050
530306	CR050
531444	CR050
60502732	CR050
60506908	CR035
60523334	CR014
60524746	CR044
60535941	CR006
60554002	CR004
60724054	CR023
60747299	CR013
60747301	CR005
60801380	CR016

ALFA ROMEO	CORAM
46773662	CR099
60815902	CR099

ALFA ROMEO/FIAT/LANCIA	CORAM
1326188080	CR121
1328029080	CR127
46528566	CR103
46773659	CR103
71731547	CR121
71752156	CR121
7555466	CR103

AUDI	CORAM
1J0407625	CR081
211405645D	CR013
311405625D-E	CR005
311405645	CR006
443407625C	CR004
811407625B-D	CR007
861407625	CR019
8D0598625A	CR124

AUDI/SKODA/VW	CORAM
4B0498625	CR124

AUDI/VW	CORAM
893498625	CR124
893498625A	CR124
893498625B	CR124
893498625D	CR124
8D0498625	CR124

BMW	CORAM
0009801504.4	CR023
2634105	CR023
31211101115	CR005
31211106032	CR033
31211106033	CR032
31211130617	CR004
31212634103	CR013
31212634104	CR006
31212634106	CR014
33131205124	CR035
33411124358	CR012
33416762317	CR091
33416762321	CR090
33416775842	CR090
33417749628	CR091
6762321-06	CR090

CHRYSLER	CORAM
4670292AF	CR110

CITROEN	CORAM
1606374680	CR098
1606623580	CR084
1610911480	CR122
1610911480SK	CR122
2-620435-9	CR034
2-620704-9D	CR034

CITROEN	CORAM
3326.70	CR097

CITROEN	CORAM
332675	CR099
332677	CR099
3350.84	CR084
373515	CR050
7903090057	CR028
7903090058	CR048
7910012338	CR028
95496453	CR025
9549645380	CR025
95590022	CR040
9559222680	CR025
95608940	CR025
ZF04330647	CR051

CITROEN / PEUGEOT	CORAM
332662	CR077

CITROEN/PEUGEOT	CORAM
1606375080	CR097
1606623580	CR093
3326.62	CR097
3326.71	CR098
3326.73	CR097
332604	CR063
3350.32S	CR062
3350.69	CR084
3350.69	CR093
3350.84	CR093
3350.86	CR092
3350.92	CR092
3350.97	CR084
335032	CR095
373032	CR127
3748.90	CR086
3748.94	CR085

374883	CR096
3748A1	CR094
6822.JL	CR122
CITROEN-PEUGEOT	**CORAM**
95030243	CR042
DACIA	**CORAM**
6001548986	CR082
DACIA / RENAULT	**CORAM**
6001547686	CR075
6001550915	CR076
7701207677	CR076
7701210004	CR038/R
DAEWOO	**CORAM**
96285525	CR074
DAF	**CORAM**
37H6720	CR024
70528997	CR023
DAIHATSU	**CORAM**
43246-87702	CR079
90043-63188	CR079
90045-21111	CR079
90368-26013	CR023
DAIHATSU/TOYOTA	**CORAM**
90363W0005	CR123
FIAT	**CORAM**
1328046080	CR077
1328046080	CR097
1330512080	CR063
1346651080	CR077
1346651080	CR097
1347527080	CR077
1347527080	CR097
24903810	CR049

336501	CR061
336658	CR045
4009067	CR020
4096101	CR014
4096104	CR013
4096591	CR024
4178737	CR001
4296782	CR010
4330647	CR051
4438573	CR003
4470124	CR050
46423870	CR017
46423871	CR103
46531160	CR102
46576148	CR047
46576155	CR045
46836196	CR101
46836198	CR101
46836200	CR104
51745702	CR098
51810364	CR104
51856892	CR102
5937306	CR001
60055388	CR046
71714458	CR102
71714468	CR103
71729124	CR104
71753809	CR097
71753818	CR127
71753820	CR101
755466	CR103
7555466	CR018
7558750	CR017
804862	CR047
82047034	CR035
82390273	CR016
92403013	CR101
985778	CR060

FIAT/LANCIA	**CORAM**
1311506080	CR063
46439334	CR002
50700495	CR104
5941798	CR002
5987091	CR002
71714457	CR099
71753821	CR104
7634573	CR002
FORD	**CORAM**
1001719	CR125
1085569	CR089
1104362	CR125
1112547	CR089
1201569	CR089
1484266	CR108
1484269	CR108
1497387	CR125
1497388	CR125
1541807	CR102
1587548	CR102
1587565	CR099
1K040AA	CR125
2S6J1K018BA	CR089
2S6W1215AA	CR107
2T141215BA	CR108
2T141K018AA	CR108
2T141K018AB	CR108
2T141K018BA	CR108
2T141K018BB	CR108
301023 AA	CR055
3024E1200A1	CR023
4242202	CR108
4366990	CR108
4410218	CR108
4410219	CR108
4689923	CR108
5025900	CR109

527973	CR023
6199622	CR043
6765406	CR109
6M211A049AA	CR125
6M211K040AA	CR125
7201008	CR125
72GB1200AA	CR005
72GB1215AA	CR006
7555466	CR103
81AB1215AB	CR011
81AB1238AA	CR013
81AB1238BA	CR014
89FB1238AC	CR043
91AB1215AA	CR012
92VB1225BA	CR109
92VX1A049AA	CR109
95VW1A049AB	CR125
95VW1K040AA	CR125
98AX1K018BB	CR089
9S51J1K018BA	CR099
DAC458500302	CR109
E6DC1215AA	CR110
E6DZ1215A	CR110
E9DC1215AA	CR110
E9DZ1215A	CR110
F1DC1215AA	CR110
F1SZ1215A	CR110
LM78349/78310	CR057
GENERAL MOTORS	**CORAM**
90 425 658	CR073
HILLMAN - PEYKAN	**CORAM**
411280	CR041
HYUNDAI	**CORAM**
51720-02000	CR067
51720-11101	CR067
51720-25000	CR067

51720-29100	CR067
51720-29150	CR067
51720-29300	CR067
51720-29400	CR067
51720-2D000	CR070
51720-2H000	CR087
51730-11101	CR067
5271026500	CR110
HYUNDAI / KIA	**CORAM**
517202J001	CR110
5271026510	CR110
5271026530	CR110
HYUNDAI/KIA	**CORAM**
51718-2H000	CR087
51720-0Q000	CR087
51720-2K000	CR087
51755-1H000	CR087
IVECO	**CORAM**
4096587	CR022
42470840	CR105
42470845	CR105
42558516	CR106
46393024	CR106
503642698	CR105
503644252	CR106
504132172	CR105
504164177	CR105
504166117	CR105
504166122	CR105
504288649	CR105
5801341526	CR105
5801564346	CR098
7180066	CR106
7187566	CR106
7189750	CR106
93824579	CR105

93824580	CR105
93825736	CR105
99825736	CR105
BTH1024C	CR105
JOHN DEERE	**CORAM**
AE49211	CR110
KIA	**CORAM**
0K55233047	CR110
0K56B33047	CR110
5,03E+106	CR110
5,03E+107	CR110
5,03E+205	CR110
51720FL047	CR110
0K56B33047	CR110
LADA	**CORAM**
21012403080	CR044
21013103020	CR020
21013103025	CR013
21083103020	CR008
21083104020	CR001
21202403080	CR044
21213103020.10	CR049
LANCIA	**CORAM**
5947834	CR001
LAND ROVER	**CORAM**
LR041425	CR121
RFC000010	CR121
MAZDA	**CORAM**
B00133042	CR056
B00133047	CR056
B00133049	CR056
B21033065	CR056
B21033067	CR056
D35033047A	CR107

D35033047B	CR107
FB01-26-151B	CR080
FB01-26-151C	CR080
FB01-26-151E	CR080
GA24-33-047	CR080
GE4T-33-048	CR080
GEAT-33-048	CR080

MERCEDES	**CORAM**
19802902	CR022
19806202	CR035
19806302	CR035
59817705	CR024
59817805	CR022
59817905	CR024
59818005	CR022
6089810005	CR035
6089810205	CR022
6089810305	CR023
69811605	CR006
9809302	CR033
9815805	CR014
9815905	CR013
9816305	CR024
9816405	CR022

MERCEDES-BENZ	**CORAM**
1699810006	CR111
1699810127	CR111
19806202	CR068
19806302	CR068
29803102	CR112
6089810005	CR068
A0029803102	CR112

MITSUBISHI	**CORAM**
MA001835	CR023
MA125842	CR023

NISSAN	**CORAM**
4021000Q0E	CR117
4021000QAG	CR117
4021000QAK	CR117
40210-A0800	CR023
40210-AX000	CR076
40210-F1700	CR022
40215-F1700	CR024
4321000Q0K	CR115
4321000QAB	CR115
43210LC42A	CR106

OPEL	**CORAM**
0328 105	CR073
328 105	CR073
328017	CR023
328018	CR014
328022	CR005
328026	CR104
328103	CR012
328104	CR008
328106	CR021
328980	CR114
330011	CR006
330012	CR013
4451762	CR117
90198742	CR117
90447280	CR021
DU2753	CR054

OPEL/VAUXHALL	**CORAM**
328011	CR101
328023	CR101
4403044	CR115
4412598	CR117
4430305	CR117
4700322	CR113
9111044	CR115
9195608	CR114
9203934	CR113
93161059	CR117
93161376	CR117
93362342	CR114
95511623	CR101
95513921	CR101
95513922	CR104

PEUGEOT	**CORAM**
13881300	CR037
1606623580	CR084
234714	CR049
235817	CR028
235819	CR028
237217	CR048
237219	CR048
237220	CR048
3233.6Y	CR037
3326.12	CR037
3326.20	CR037
3326.27	CR051
3326.29	CR037
3326.31	CR018
3326.43	CR018
332633	CR040
373015	CR048
373016	CR048
373021	CR025
373027	CR025
373515	CR050
4247.25	CR025
9559002280	CR040
9600067680	CR028

RENAULT	**CORAM**
402107049R	CR120
402108022R	CR120
402109697R	CR117
6040000570	CR076

6040005585	CR088
7701206742	CR115
7701207358	CR117
7701207676	CR116
7701207966	CR117
7701208058	CR119
7701208059	CR118
7701208427	CR117
7701209540	CR119
7701210111	CR116
7703090034	CR049
7703090199	CR029
7703090211	CR027
7703090222	CR031
7703090253	CR025
7703090266	CR028
7703090283	CR030
7703090325	CR026
7703090353	CR016
7703090365	CR038
7703090416	CR025
7703090434	CR025
7703090434	CR026
7903090266	CR028
7903090267	CR048
8200339531	CR075
8200600646	CR038/R
8200893832	CR088
RENAULT/RENAULT TRUCKS	**CORAM**
7485139097	CR106
RENAULT/SAMSUNG/MOTOR	**CORAM**
42160-31010	CR071
ROVER	**CORAM**
607199	CR024
GHB-101	CR023

ROVER/LAND ROVER	**CORAM**
GHK1692	CR121
RUD100150	CR121
SAAB	**CORAM**
42 42 202	CR073
46 89 923	CR073
8701906	CR024
8906240	CR023
SEAT	**CORAM**
1J0407625	CR081
311405645	CR006
AC15824401	CR024
BA14902300	CR047
BA15823600	CR046
BA15823700	CR045
FA15824400	CR013
GE15823600	CR014
JA14430100	CR003
JA15830800	CR010
X044438800	CR001
SEAT/VW	**CORAM**
X044193140	CR002
SKODA	**CORAM**
1J0407625	CR081
969300590	CR014
TALBOT	**CORAM**
13881300	CR037
203339D	CR023
3236.64	CR037
323629	CR037
32366Y	CR037
4412860100	CR037
4454381200	CR023
54381200	CR023
7703090267	CR048

7903090002	CR048
7903090003	CR028
7910012339	CR048
TOFAS	**CORAM**
46439334	CR002
5941798	CR002
5987091	CR002
7634573	CR002
TOYOTA	**CORAM**
04422-20010	CR078
3872W-8C581	CR059
6040100283	CR123
90080-36108	CR126
90080-36178	CR126
90177-22001	CR078
90363-40066	CR078
9036340079	CR123
90363T0023	CR123
90363W0006	CR123
90368-21065	CR024
90368-26013	CR023
90368-26027	CR023
90368-34020	CR022
9036838001	CR056
90369-38003	CR078
90369-38021	CR126
90369-38022	CR126
90369-W0001	CR122
90521-79002	CR078
VAG	**CORAM**
16409123	CR068
VOLKSWAGEN	**CORAM**
16409123	CR035
171407625A-C	CR008
191407625	CR015
1J0407625	CR081

211405625	CR014
211405645D	CR013
291407645	CR050
311405625D	CR005
357407625A	CR009
811407625B-D	CR007
91517185	CR051
VOLKWAGEN	**CORAM**
19409123	CR049
251405645B	CR033
867407625A	CR019
VOLVO	**CORAM**
18071+18070	CR034
18074	CR034
181586	CR013
181589	CR014
183576+183577	CR074
183834	CR023
184071+184070	CR034
528996	CR006
528997	CR023
VW	**CORAM**
7M0407625	CR125
7M3598625	CR125
893407625	CR124
893407625C	CR124
V893407625G	CR124
ZASTAVA	**CORAM**
336658	CR045
60055388	CR046
804862	CR047

FAG	CORAM
301023 AA	CR055
32006F121	CR050
505508	CR013
506649	CR006
506650	CR023
507063	CR024
509592A	CR047
50970A	CR046
509764A	CR045
509845	CR060
512786	CR020
518772A	CR005
521771	CR004
522372	CR003
523854	CR037
528810	CR007
529891	CR001
529901	CR061
531910	CR019
532333	CR044
533060	CR051
533953	CR004
534662	CR010
535410	CR028
535411	CR048
540466B	CR008
540484AH49A	CR011
540733	CR007
541153	CR002
542186	CR012
543359B	CR029
543772	CR027
543909	CR003
544307	CR015
545495D	CR004
546238A	CR030
546467	CR025

559192	CR052
561447	CR019
561481	CR040
562398	CR016
566719	CR009
580400	CR021
6306.2RS LHT23	CR044

IRB	CORAM
2021	CR045
2022	CR047
2024	CR046
2026	CR023
2029	CR020
2030	CR013
2031	CR006
2036	CR010
2037	CR048
2038	CR028
2040	CR035
2040	CR068
2042	CR005
2043	CR011
2050	CR014
2051	CR024
2052	CR022
2220	CR025
2221	CR026
2222	CR038
2503	CR056
2522	CR050
2524	CR049
2526	CR051
2562	CR043
8006	CR037
8014	CR003
8017	CR027
8026	CR002
8040	CR001

8041	CR008
8042	CR030
8048	CR031
8051	CR019
8052	CR007
8055	CR018
8061	CR004
8065	CR015
8066	CR016
8085	CR012
8086	CR040
8089	CR017
8094	CR018
8095	CR009
8100	CR044
8101	CR029
8520	CR042
8622	CR021
8651	CR052
8698	CR053
8740	CR062

LORETT	CORAM
C030	CR035
C034	CR004
C046	CR006
C047	CR023
C048	CR005
C064	CR013
C065	CR014
C073	CR050
C101	CR061
C102	CR045
C107	CR047
C119	CR060
C121	CR020
C142	CR010
C165	CR003
C171	CR001

C172	CR002
C183	CR046
C185	CR016
C199	CR017
C200	CR018
C210	CR051
C220	CR063
C300	CR019
C302	CR007
C304	CR062
C370	CR032
C371	CR033
C388	CR042
C393	CR048
C395	CR028
C401	CR040
C411	CR011
C426	CR043
C450	CR044
C451	CR049
C460	CR022
C461	CR024
C488	CR073
C489	CR021
C490	CR008
C491	CR012
C510	CR037
C517	CR025
C556	CR027
C557	CR031
C558	CR029
C559	CR030
C564	CR026
C572	CR038
C630	CR015
C632	CR009
C650	CR074
C651	CR034

CR7035	CR078
CR7054	CR056
CR7095	CR079
SKF	**CORAM**
1861388	CR027
25590/20	CR069
309724	CR019
309726DA	CR008
311309	CR015
311396B	CR012
311443B	CR009
32004/VB014	CR028
32005/VB015	CR048
32006X	CR050
32008X	CR049
32010X/QVB026	CR051
331274	CR005
332541/VQ060	CR011
4010832	CR031
440090	CR029
440320 H	CR037
445620BA	CR030
445879AC	CR042
446047CA	CR040
44645+44613	CR047
446762B	CR018
603694A	CR004
614593	CR003
616480B	CR044
630374	CR003
633196	CR004
633295	CR002
633313	CR001
633457	CR004
633531B	CR016
633669A	CR018
633676	CR017
636096A	CR073

636114A	CR021
639154	CR020
639174	CR047
639175	CR046
639177	CR060
639209	CR061
639213	CR045
639297	CR010
639330	CR066
639337	CR065
639338	CR064
BA2B445533A	CR031
BAH0013	CR018
BAH0051B	CR062
BAH0060	CR071
BAH-0186A	CR084
BAH5000	CR042
BAHB311315BD	CR007
BAHB311316B	CR019
BAHB633967	CR002
BAHB636193C	CR067
BT1B328688AC/Q	CR005
BT1B329013A/Q	CR043
BT2B445539AA	CR025
BTHB329129	CR077
KJL69349/69310	CR072
KL68149+KL68110	CR032
KL68149+L68111	CR074
KLM11749+KLM11710	CR006
KLM11949+KLM11910	CR013
KLM12649+KM12610	CR024
KLM12749+KLM12710	CR033
KLM12749+KLM12711	CR034
KLM44649+KLM44610	CR023
KLM45449/45410	CR005
KLM45449+KLM45410	CR005
KLM48548+KLM48510	CR022
KLM501349+KLM501310	CR035

KLM501349+KLM501310	CR068
KLM67048+KLM67010	CR014
VKBA3584	CR084
VKBA6544	CR086
VKBA6549	CR085
VKBA6658	CR038/R
VKBA6972	CR080
SNR	**CORAM**
10N6207F075E	CR027
10R32004VC12UA	CR028
10R32005VC12UA	CR048
10R32010A	CR051
32006 C	CR050
C-639330 A/Q	CR066
CR7678	CR087
F-639337	CR065
F-639338	CR064
FC12033S03	CR030
FC12180-S02	CR026
FC12271	CR038
FC12438	CR030
FC41394	CR085
FC41645	CR086
FL12025-S01	CR025
GB10702S03	CR029
GB10790S05	CR001
GB10840S02	CR002
GB10884	CR008
GB12010	CR004
GB1210	CR004
GB12131S03	CR016
GB12136	CR015
GB12163S04	CR040
GB12306S01	CR017
GB12320S02	CR009
GB12776	CR012
GB12862	CR018
GB40246	CR063

GB40547	CR062
JL69349/10	CR072
LM78349/78310	CR057
R140.17	CR077
R152.55	CR089
R155.75	CR076
R155.80	CR075
R155.88	CR038/R
R155.89	CR082
R184.13	CR070
TGB10872S02	CR031
XGB41930	CR088
Y44-FB10394 S02	CR037

CUSCINETTI RUOTA
WHEEL BEARINGS
ROULEMENTS ROUES
IMMAGINI – IMAGES – IMAGES

CR001 — Mis: 30x60x37

FIAT	4178737		
FIAT	5937306		
LADA	21083104020		
LANCIA	5947834		
SEAT	X044438800		

CR002 — Mis: 35x68x37

FIAT/LANCIA	46439334	TOFAS	46439334
FIAT/LANCIA	5941798	TOFAS	5941798
FIAT/LANCIA	5987091	TOFAS	5987091
FIAT/LANCIA	7634573	TOFAS	7634573
SEAT/VW	X044193140		

CR003 — Mis: 30x65x21

FIAT	4438573		
SEAT	JA14430100		

CR004 — Mis: 42x75x37

ALFA	60554002		
AUDI	443407625C		
BMW	31211130617		

CR005 — Mis: 29x50,2x14,2

ALFA	60747301	VOLKSWAGEN	311405625D
AUDI	311405625D-E		
BMW	31211101115		
FORD	72GB1200AA		
OPEL	328022		

CR006 — Mis: 17,4x39,8x13,8

ALFA	60535941	OPEL	330011
AUDI	311405645	SEAT	311405645
BMW	31212634104	VOLVO	528996
FORD	72GB1215AA		
MERCEDES	69811605		

CR007 — Mis: 39x68x37

AUDI	811407625B-D		
VOLKSWAGEN	811407625B-D		

CR008 — Mis: 34x64x37

LADA	21083103020		
OPEL	328104		
VOLKSWAGEN	171407625A-C		

CR009 — Mis: 40x72x37

VOLKSWAGEN	357407625A		

CR010 — Mis: 28x57,1x17,4

FIAT	4296782		
SEAT	JA15830800		

CR011 — Mis: 35x60x15,8

FORD	81AB1215AB		

CR012 — Mis: 39x72x37

BMW	33411124358		
FORD	91AB1215AA		
OPEL	328103		

CR013 — Mis: 19,05x45,2x15,4

ALFA	60747299	LADA	21013103025
AUDI	211405645D	MERCEDES	9815905
BMW	31212634103	OPEL	330012
FIAT	4096104	SEAT	FA15824400
FORD	81AB1238AA	VOLKSWAGEN	211405645D

CR014 — Mis: 31,7x59,1x15,8

ALFA	60523334	OPEL	328018
BMW	31212634106	SEAT	GE15823600
FIAT	4096101	SKODA	969300590
FORD	81AB1238BA	VOLKSWAGEN	211405625
MERCEDES	9815805	VOLVO	181589

CR015 — Mis: 35x66x37

VOLKSWAGEN	191407625		

CR016 — Mis: 37x72x37

ALFA	60801380		
FIAT	82390273		
RENAULT	7703090353		

CR017 — Mis: 35x66x33

FIAT	46423870		
FIAT	7558750		

CR018 — Mis: 35x72x33

FIAT	7555466		
FIAT	7555466		
PEUGEOT	3326.31		
PEUGEOT	3326.43		

CUSCINETTI RUOTA
WHEEL BEARINGS
ROULEMENTS ROUES
IMMAGINI – IMAGES – IMAGES

CR019 — Mis: 34x62x37

AUDI	861407625		
VOLKWAGEN	867407625A		

CR020 — Mis: 26x57,1x17,4

FIAT	4009067		
LADA	21013103020		

CR021 — Mis: 34x66x37

OPEL	328106		
OPEL	90447280		

CR022 — Mis: 34,9x65x18

IVECO	4096587	MERCEDES	9816405
MERCEDES	19802902	NISSAN	40210-F1700
MERCEDES	59817805	TOYOTA	90368-34020
MERCEDES	59818005		
MERCEDES	6089810205		

CR023 — Mis: 26,9x50,2x14,2

ALFA	1,16002E+11	DAIHATSU	90368-26013
ALFA	60724054	FORD	3024E1200A1
BMW	0009801504.4	FORD	527973
BMW	2634105	MERCEDES	6089810305
DAF	70528997	MITSUBISHI	MA001835

CR024 — Mis: 21,4x50x17,5

DAF	37H6720	NISSAN	40215-F1700
FIAT	4096591	ROVER	607199
MERCEDES	59817705	SAAB	8701906
MERCEDES	59817905	SEAT	AC15824401
MERCEDES	9816305	TOYOTA	90368-21065

CR025 — Mis: 25x52x37

CITROEN	95496453	PEUGEOT	373027
CITROEN	9549645380	PEUGEOT	4247.25
CITROEN	9559222680	RENAULT	7703090253
CITROEN	95608940	RENAULT	7703090416
PEUGEOT	373021	RENAULT	7703090434

CR025/R

VERSIONE DEL CR025 A RULLI CONICI - CR025 TAPER ROLLER BEARING VERSION			

CR026 — Mis: 25x52x43

RENAULT	7703090325		
RENAULT	7703090434		

CR027 — Mis: 35x72x17

RENAULT	7703090211		

CR028 — Mis: 20x42x15

CITROEN	7903090057	RENAULT	7703090266
CITROEN	7910012338	RENAULT	7903090266
PEUGEOT	235817	TALBOT	7903090003
PEUGEOT	235819		
PEUGEOT	9600067680		

CR029 — Mis: 42x84x39

RENAULT	7703090199		

CR030 — Mis: 35x65x35

RENAULT	7703090283		
RENAULT	7703090283		

CR030/R

VERSIONE DEL CR030 A RULLI CONICI - CR030 TAPER ROLLER BEARING VERSION			

CR031 — Mis: 40x108x32

RENAULT	7703090222		
RENAULT	7703090222		

CR032 — Mis: 59,1x35x15,9

BMW	31211106033		

CR033 — Mis: 45,2x22x15,5

BMW	31211106032		
MERCEDES	9809302		
VOLKWAGEN	251405645B		

CR034 — Mis: 46x22x15,5

CITROEN	2-620435-9		
CITROEN	2-620704-9D		
VOLVO	18071+18070		
VOLVO	18074		
VOLVO	184071+184070		

CR035 — Mis: 41,2x73,4x19,5

ALFA	1,05642E+11	MERCEDES	19806302
ALFA	60506908	MERCEDES	6089810005
BMW	33131205124	VOLKSWAGEN	16409123
FIAT	82047034		
MERCEDES	19806202		

CR037 — Mis: 40x80x30,2

PEUGEOT	13881300	TALBOT	13881300
PEUGEOT	3233.6Y	TALBOT	3236.64
PEUGEOT	3326.12	TALBOT	323629
PEUGEOT	3326.20	TALBOT	32366Y
PEUGEOT	3326.29	TALBOT	4412860100

CR038 — Mis: 25x55x43

RENAULT	7703090365		

CR038/R — Mis: 25x55x43

DACIA / RENAULT	7701210004		
RENAULT	8200600646		
VERSIONE DEL CR038 A RULLI CONICI - CR038 TAPER ROLLER BEARING VERSION			

CR040 — Mis: 42x82x36

CITROEN	95590022		
PEUGEOT	332633		
PEUGEOT	9559002280		

CR041 — Mis: 30X72X25/28

HILLMAN - PEYKAN	411280		

CR042 — Mis: 25x56x32

CITROEN-PEUGEOT	95030243		
CITROEN-PEUGEOT	95030243		

CR043 — Mis: 29x50,3x17,52

FORD	6199622		
FORD	89FB1238AC		

CR044 — Mis: 30x72x19

ALFA	60524746		
LADA	2101403080		
LADA	2120403080		

CR045 — Mis: 15x42x13

FIAT	336658		
FIAT	46576155		
SEAT	BA15823700		
ZASTAVA	336658		

CR046 — Mis: 23x52x15

FIAT	60055388		
SEAT	BA15823600		
ZASTAVA	60055388		

CR047 — Mis: 26x52x15

FIAT	46576148		
FIAT	804862		
SEAT	BA14902300		
ZASTAVA	804862		

CR048 — Mis: 25x47x15

CITROEN	7903090058	PEUGEOT	373016
PEUGEOT	237217	RENAULT	7903090267
PEUGEOT	237219	TALBOT	7703090267
PEUGEOT	237220	TALBOT	7903090002
PEUGEOT	373015	TALBOT	7910012339

CR049 — Mis: 40x68x19

FIAT	24903810		
LADA	21213103020.10		
PEUGEOT	234714		
RENAULT	7703090034		
VOLKWAGEN	19409123		

CR050 — Mis: 30x55x17,1

ALFA	530304	FIAT	4470124
ALFA	530306	PEUGEOT	373515
ALFA	531444	VOLKSWAGEN	291407645
ALFA	60502732		
CITROEN	373515		

CR051 — Mis: 50x80x20

CITROEN	ZF04330647		
FIAT	4330647		
PEUGEOT	3326.27		
VOLKSWAGEN	91517185		

CR052 — Mis: 38x74x50

NISSAN			

CR053 — Mis: 38x74x33/36

NISSAN			
TOYOTA			

CR054 — Mis: 27x53x43

OPEL	DU2753		

CR055 — Mis: 29x53x37

FORD	301023 AA		

CR055/R

VERSIONE DEL CR055 A RULLI CONICI - CR055 TAPER ROLLER BEARING VERSION			

CR056 — Mis: 17,1x38x63

MAZDA	B00133042	TOYOTA	9036838001
MAZDA	B00133047		
MAZDA	B00133049		
MAZDA	B21033065		
MAZDA	B21033067		

CR057 — Mis: 16,7x62x35

FORD	LM78349/78310		

CR058 — Mis: 25x72x43

RENAULT			

CR059 — Mis: 38x72x33/36

TOYOTA	3872W-8CS81		

CR060 — Mis: 20x43x13,27

FIAT	985778		

CR061 — Mis: 15x35x11,05

FIAT	336501		

CR062 — Mis: 37x72x33

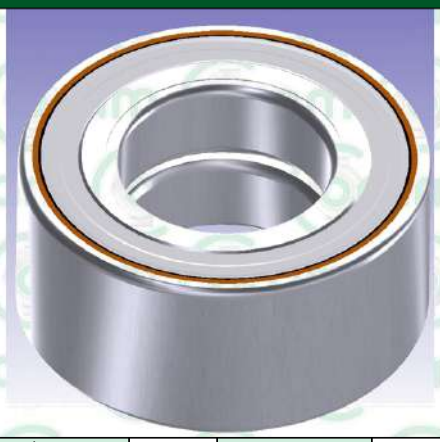

CITROEN/PEUGEOT	3350.32S		

CR063 — Mis: 44X82,5X37

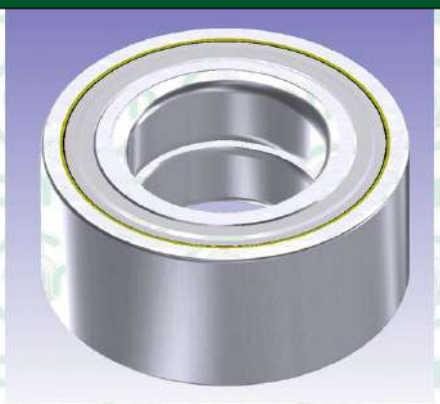

CITROEN/PEUGEOT	332604		
FIAT	1330512080		
FIAT/LANCIA	1311506080		

CR064 — Mis: 34,93X76,20X29,55

CR065 — Mis: 33,35X76,20x29,55

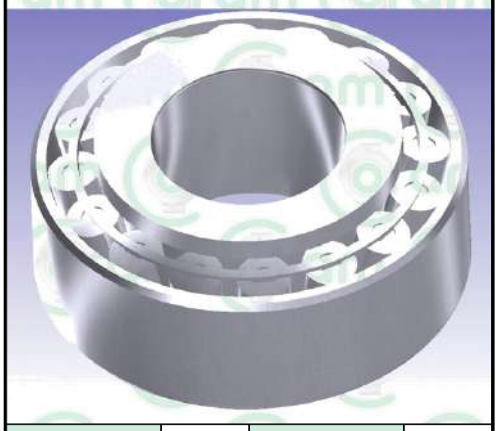

CR066 — Mis: 39X72X21,60

CR067 — Mis: 38.1X70X37

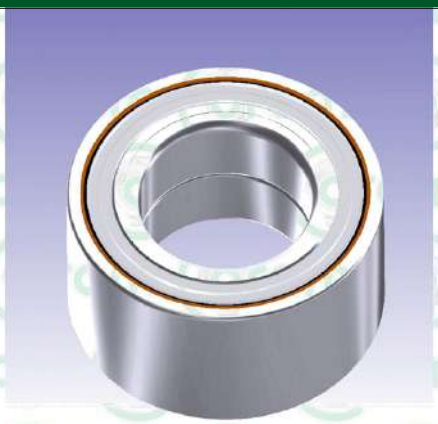

HYUNDAI	51720-02000	HYUNDAI	51720-29300
HYUNDAI	51720-11101	HYUNDAI	51720-29400
HYUNDAI	51720-25000	HYUNDAI	51730-11101
HYUNDAI	51720-29100		
HYUNDAI	51720-29150		

CR068 — Mis: 41,275x73,43x19,56

MERCEDES-BENZ	19806202		
MERCEDES-BENZ	19806302		
MERCEDES-BENZ	6089810005		
VAG	16409123		

CR069 — Mis: 45,63x82,95x23,86

CR070 — Mis: 39x74x36

HYUNDAI	51720-2D000		

CR071 — Mis: 40x74x36

RENAULT/SAMSUNG/MOTOR	42160-31010		

CR072 — Mis: 17,1x38x63

OPEL/G.M/FIAT/FORD			

CR073 — Mis: 39x74x39

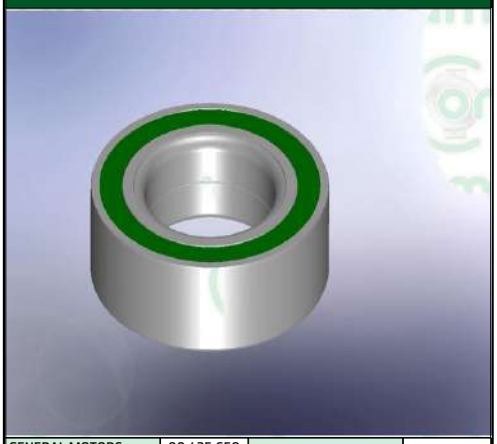

GENERAL MOTORS	90 425 658		
OPEL	0328 105		
OPEL	328 105		
SAAB	42 42 202		
SAAB	46 89 923		

CR074 — Mis: 35x60x16

DAEWOO	96285525		
VOLVO	183576+183577		

CR075 — Mis: 37x72.03x37

DACIA / RENAULT	6001547686		
RENAULT	8200339531		

CR076 — Mis: 37x72.03x37

DACIA / RENAULT	6001550915		
DACIA / RENAULT	7701207677		
NISSAN	40210-AX000		
RENAULT	6040000570		

CR077 — Mis: 49x84x48

CITROEN / PEUGEOT	332662		
FIAT	1328046080		
FIAT	1346651080		
FIAT	1347527080		

CR078 — Mis: 40x74x42

TOYOTA	04422-20010		
TOYOTA	90177-22001		
TOYOTA	90363-40066		
TOYOTA	90369-38003		
TOYOTA	90521-79002		

CR079 — Mis: 38x70x38

DAIHATSU	43246-87702		
DAIHATSU	90043-63188		
DAIHATSU	90045-21111		

CR080 — Mis: 42x80x45

MAZDA	FB01-26-151B	MAZDA	GEAT-33-048
MAZDA	FB01-26-151C		
MAZDA	FB01-26-151E		
MAZDA	GA24-33-047		
MAZDA	GE4T-33-048		

CR081 — Mis: 40x74x40

AUDI	1J0407625		
SEAT	1J0407625		
SKODA	1J0407625		
VOLKSWAGEN	1J0407625		

CR082 — Mis: 30x62x48

DACIA	6001548986		

CR084 — Mis: 42x82x36

CITROEN	1606623580	CITROEN/PEUGEOT	3350.69
CITROEN	1606623580	CITROEN/PEUGEOT	3350.97
CITROEN	3350.84	CITROEN/PEUGEOT	3350.97
CITROEN	3350.84	PEUGEOT	1606623580
CITROEN/PEUGEOT	3350.69	PEUGEOT	1606623580

CR085 — Mis: 30x62x51

CITROEN/PEUGEOT	3748.94		

CR086 — Mis: 30x62x48

CITROEN/PEUGEOT	3748.90		

CR087 — Mis: 42x78x40

HYUNDAI	51720-2H000		
HYUNDAI/KIA	51718-2H000		
HYUNDAI/KIA	51720-0Q000		
HYUNDAI/KIA	51720-2K000		
HYUNDAI/KIA	51755-1H000		

CR088 — Mis: 42x77x39

RENAULT	6040005585		
RENAULT	8200893832		

CR089 — Mis: 39x72x37

FORD	1085569		
FORD	1112547		
FORD	1201569		
FORD	2S6J1K018BA		
FORD	98AX1K018BB		

CR090 — Mis: 45x85x41

BMW	33416762321		
BMW	33416775842		
BMW	6762321-06		

CR091 — Mis: 42x75x37

BMW	33416762317		
BMW	33417749628		

CR092 — Mis: 37x72x22

CITROEN/PEUGEOT	3350.86		
CITROEN/PEUGEOT	3350.92		

CR093 — Mis: 42x82x36

CITROEN/PEUGEOT	1606623580		
CITROEN/PEUGEOT	3350.69		
CITROEN/PEUGEOT	3350.84		

CR094 — Mis: 25x52x42

CITROEN/PEUGEOT	3748A1		

CR095 — Mis: 37x72x33

CITROEN/PEUGEOT	335032		
CITROEN/PEUGEOT	335032		
CITROEN/PEUGEOT	335032		

CR096 — Mis: 25x60x45

CITROEN/PEUGEOT	374883		
CITROEN/PEUGEOT	374883		

CR097 — Mis: 49x84x48

CITROEN	3326.70	FIAT	1346651080
CITROEN/PEUGEOT	1606375080	FIAT	1347527080
CITROEN/PEUGEOT	3326.62	FIAT	71753809
CITROEN/PEUGEOT	3326.73		
FIAT	1328046080		

CR098 — Mis: 55x90x54

CITROEN	1606374680		
CITROEN/PEUGEOT	3326.71		
FIAT	51745702		
IVECO	5801564346		

CR099 — Mis: 35x72x33

ALFA ROMEO	46773662	FORD	1587565
ALFA ROMEO	60815902	FORD	95511K018BA
CITROEN	332675		
CITROEN	332677		
FIAT/LANCIA	71714457		

CR101 — Mis: 37x74x37

FIAT	46836196	OPEL/VAUXHALL	328023
FIAT	46836198	OPEL/VAUXHALL	95511623
FIAT	71753820	OPEL/VAUXHALL	95513921
FIAT	92403013		
OPEL/VAUXHALL	328011		

CR102 — Mis: 35x66x33

FIAT	46531160		
FIAT	51856892		
FIAT	71714458		
FORD	1541807		
FORD	1587548		

CR103 — Mis: 35x72x33

ALFA ROMEO/FIAT/LANCIA	46528566	FIAT	755466
ALFA ROMEO/FIAT/LANCIA	46773659	FORD	7555466
ALFA ROMEO/FIAT/LANCIA	7555466		
FIAT	46423871		
FIAT	71714468		

CR104 — Mis: 42x82,5x37

FIAT	46836200	OPEL	328026
FIAT	51810364	OPEL/VAUXHALL	95513922
FIAT	71729124		
FIAT/LANCIA	50700495		
FIAT/LANCIA	71753821		

CR105 — Mis: 40x73x55

IVECO	42470840	IVECO	504166117
IVECO	42470845	IVECO	504166122
IVECO	503642698	IVECO	504288649
IVECO	504132172	IVECO	5801341526
IVECO	504164177	IVECO	93824579

CR106 — Mis: 55x90x60

IVECO	42558516	IVECO	7189750
IVECO	46393024	NISSAN	43210LC42A
IVECO	503644252	RENAULT/RENAULT TRUCKS	7485139097
IVECO	7180066		
IVECO	7187566		

CR107 — Mis: 39x72,03x37

FORD	2S6W1215AA		
MAZDA	D35033047A		
MAZDA	D35033047B		

CR108 — Mis: 39x74x39

FORD	1484266	FORD	2T141K018BA
FORD	1484269	FORD	2T141K018BB
FORD	2T141215BA	FORD	4242202
FORD	2T141K018AA	FORD	4366990
FORD	2T141K018AB	FORD	4410218

CUSCINETTI RUOTA
WHEEL BEARINGS
ROULEMENTS ROUES
IMMAGINI – IMAGES – IMAGES

CR109 — Mis: 45x85x30

FORD	5025900		
FORD	6765406		
FORD	92VB1225BA		
FORD	92VX1A049AA		
FORD	DAC458500302		

CR110 — Mis: 42x76x39

CHRYSLER	4670292AF	FORD	F1DC1215AA
FORD	E6DC1215AA	FORD	F1SZ1215A
FORD	E6DZ1215A	HYUNDAI	5271026500
FORD	E9DC1215AA	HYUNDAI / KIA	517202J001
FORD	E9DZ1215A	HYUNDAI / KIA	5271026510

CR111 — Mis: 45x84x39

MERCEDES-BENZ	1699810006		
MERCEDES-BENZ	1699810127		

CR112 — Mis: 22x50x17,5

MERCEDES-BENZ	29803102		
MERCEDES-BENZ	29803102		
MERCEDES-BENZ	A0029803102		
MERCEDES-BENZ	A0029803102		

CR113 — Mis: 35x61.8x40

OPEL/VAUXHALL	4700322		
OPEL/VAUXHALL	9203934		

CR114 — Mis: 34x67x37

OPEL	328980		
OPEL/VAUXHALL	9195608		
OPEL/VAUXHALL	93362342		

CR115 — Mis: 45,3x80x48

NISSAN	4321000Q0K		
NISSAN	4321000QAB		
OPEL/VAUXHALL	4403044		
OPEL/VAUXHALL	9111044		
RENAULT	7701206742		

CR116 — Mis: 42x77x39

RENAULT	7701207676		
RENAULT	7701210111		

CR117 — Mis: 45x88x39

NISSAN	4021000Q0E	OPEL/VAUXHALL	4412598
NISSAN	4021000QAG	OPEL/VAUXHALL	4430305
NISSAN	4021000QAK	OPEL/VAUXHALL	93161059
OPEL	4451762	OPEL/VAUXHALL	93161376
OPEL	90198742	RENAULT	402109697R

CR118 — Mis: 25x55x48

RENAULT	7701208059		

CR119 — Mis: 25x55x45

RENAULT	7701208058		
RENAULT	7701209540		

CR120 — Mis: 42x80x39

RENAULT	402107049R		
RENAULT	402108022R		

CR121 — Mis: 44x82,5x37

ALFA ROMEO/FIAT/LANCIA	1326188080	ROVER/LAND ROVER	GHK1692
ALFA ROMEO/FIAT/LANCIA	71731547	ROVER/LAND ROVER	RUD100150
ALFA ROMEO/FIAT/LANCIA	71752156		
LAND ROVER	LR041425		
LAND ROVER	RFC000010		

CR122 — Mis: 38x69x34/39

CITROEN	1610911480	CITROEN/PEUGEOT	6822.JL
CITROEN	1610911480	TOYOTA	90369-W0001
CITROEN	16109114805K	TOYOTA	90369-W0001
CITROEN	16109114805K		
CITROEN/PEUGEOT	6822.JL		

CR123 — Mis: 40x75x39

DAIHATSU/TOYOTA	90363W0005		
TOYOTA	6040100283		
TOYOTA	9036340079		
TOYOTA	90363T0023		
TOYOTA	90363W0006		

CR124 — Mis: 39x41x75x37

AUDI	8D0598625A	AUDI/VW	893498625D
AUDI/SKODA/VW	4B0498625	AUDI/VW	8D0498625
AUDI/VW	893498625	VW	893407625
AUDI/VW	893498625A	VW	893407625C
AUDI/VW	893498625B	VW	V893407625G

CR125 — Mis: 43x80x38

FORD	1001719	FORD	6M211A049AA
FORD	1104362	FORD	6M211K040AA
FORD	1497387	FORD	7201008
FORD	1497388	FORD	95VW1A049AB
FORD	1K040AA	FORD	95VW1K040AA

CR126 — Mis: 38x71x39

TOYOTA	90080-36108		
TOYOTA	90080-36178		
TOYOTA	90369-38021		
TOYOTA	90369-38022		
TOYOTA	90369-38022		

CR127 Mis: 42x75x60

ALFA ROMEO/FIAT/LANCIA	1328029080		
CITROEN/PEUGEOT	373032		
FIAT	71753818		

Coram®

by HPARTS
Automotive Solutions

MOZZI RUOTA AUTO E VEICOLI COMMERCIALI
Wheel hubs for cars and commercial vehicles

ABARTH

MODELLO MODEL	ANNO YEAR	ANT CORAM FRONT CORAM	ANT ORIGINALE FRONT ORIGINAL	POST CORAM REAR CORAM	POST ORIGINALE REAR ORIGINAL	NOTE NOTES
GRANDE PUNTO						
1.4	07-12			MP0233	51787397	
PUNTO						
1.4	12->			MP0233	51787397	

ALFA ROMEO

MODELLO MODEL	ANNO YEAR	ANT CORAM FRONT CORAM	ANT ORIGINALE FRONT ORIGINAL	POST CORAM REAR CORAM	POST ORIGINALE REAR ORIGINAL	NOTE NOTES
ALFA 145						
1.3 8v	94-96	MP0022	60800548	MP0029	7732410	
1.4 T.S. 16 v	97-00	MP0022	60800548			
1.6 8v	94-96	MP0022	60800548	MP0029	7732410	
1.6 T.S. 16v	97-00	MP0022	60800548			
1.7 16v	94-96	MP0022	60800548	MP0029	7732410	Back ABS 44 teeth
1.8 T.S. - 1.8 T.S. 16 v	97-00	MP0022	60800548			
145 eccetto Brasile - Gamma 97	94-98			MP0033	60812195	
1930 T.DS. Gamma 97- 2.0 T.S. Gamma 97-2.0 T.S. 16 v	97-00	MP0022	60800548			
1930 TB/DS	94-96			MP0029	7732410	Back ABS 44 teeth
2.0 .T. Spark 16v	94-10/95	MP0022	60800548	MP0029	7732410	Back ABS 44 teeth
2.0 .T. Spark 16v	11/95-96	MP0022	60800548	MP0080	60812057	Back ABS 44 teeth
Gamma 97	97-98			MP0080	60812057	Back ABS 44 teeth
Gamma 97	97-98			MP0165	60815429	Back ABS 48 poles
M.Y. '99	98-00			MP0165	60815429	Back ABS 48 poles
M.Y. '99	98-00			MP0033	60812195	
ALFA 146						
Tutti i tipi/All types/Tous types	94-96			MP0029	7732410	Back ABS 44 teeth
1.3 8v -1.6 8v- 1.7 16v - 1930 T.DS.	94-96	MP0022	60800548	MP0033	60812195	
1.4 T.S. 16v -1.6 T.S. 16v -1.8 T.S. 16v	97-00	MP0022	60800548			
1910 JTD M.Y. '99	98-00	MP0079	60545087			
1930 T.DS. -2.0 T.S. 16v	97-00	MP0022	60800548			
2.0 T.Spark 16 v	94-96	MP0022	60800548	MP0080	60812057	Back ABS 44 teeth
Gamma 97	97-98			MP0080	60812057	Back ABS 44 teeth
Gamma 97 - M.Y. '99	97-00			MP0165	60815429	Back ABS 48 poles
Gamma 97 - M.Y. '99	97-00			MP0033	60812195	

follow ALFA ROMEO

MODELLO MODEL	ANNO YEAR	ANT CORAM FRONT CORAM	ANT ORIGINALE FRONT ORIGINAL	POST CORAM REAR CORAM	POST ORIGINALE REAR ORIGINAL	NOTE NOTES
ALFA 147						
Tutti i tipi/All types/Tous types	00->			MP0166	60652014	Back ABS 48 poles
1.6 16V T.SPARK - 1.6 16V T.SPARK ECO - 1.9 JTD - 2.0 16V T.SPARK	01-10			MP0242	51757885	
1.6 16V T.SPARK - 1.6 16V T.SPARK ECO - 1.9 JTD - 2.0 16V T.SPARK	01-10	MP0261	82466910			
1.6 TS 16v-1910 JTD 8v-1910 JTD 16v - 2.0 TS/JTS 16v	00->	MP0086	60811032			
1.9 JTD 16V	02-10			MP0242	51757885	
1.9 JTD 16V	02-10	MP0261	82466910			
1.9 JTDM - 1.9 JTDM 16V	04-10			MP0242	51757885	
1.9 JTDM - 1.9 JTDM 16V	04-10	MP0261	82466910			
1.9 JTDM 8V	05-10			MP0242	51757885	
1.9 JTDM 8V	05-10	MP0261	82466910			
3.2 GTA	03-10			MP0242	51757885	
3.2 GTA	00->	MP0082	60510369			
3.2 GTA	03-10	MP0244	51813925			
ALFA 155						
Tutti i tipi/All types/Tous types	92-97			MP0029	7732410	Back ABS 44 teeth
Tutti i tipi/All types/Tous types	92-97			MP0033	60812195	
1.6 T.S. 16 v -1.7 T.S. -1.8 T.S.-1.8 T.S. 16v - 1930 TD	92-97	MP0022	60800548			
1930 TD - 2.5 TD/T.DS.	92-96			MP0029	7732410	Back ABS 44 teeth
1930 TD - 2.5 TD/T.DS.	92-96			MP0033	60812195	
2.0 T.S. 8v /16v	92-97	MP0022	60800548			
2.0 TB/BZ 4X4	92-96	MP0079	60545087	MP0022	60800548	
2.5 TD/T.DS. - 2.5 TD -2.5 V6	92-97	MP0079	60545087			
ALFA 156						
1.6 16V T.SPARK - 1.8 16V T.SPARK - 1.9 JTD - 2.4 JTD - 2.5 V6 24V	97-05			MP0242	51757885	
1.6 16V T.SPARK - 1.8 16V T.SPARK - 1.9 JTD - 2.4 JTD - 2.5 V6 24V	97-05	MP0244	51813925			
1.6 T.S -1.8 TS 16v -1.9 GTD 16v -1910 JTD 8v/16v-2.0 JTS/TS 16v-2.4 JGTD 20v-2.4JTD 10v-2.5 V6 24v	02->	MP0081	60563372			
1.6 T.S.-1.8 T.S- 1.9 GTD 16V- 1910 GTD TD.ID- 1910 JTD 8v/16v-1910 JTD TD.ID-2.0 T.S.2.4 JTD TD.ID-2.5 V6	97-01	MP0081	60563372			
1.9 JTD 16V - 3.2 GTA	02-05			MP0242	51757885	
1.9 JTD 16V - 3.2 GTA	02-05	MP0244	51813925			
156- 156 M.Y 2002- TD.ID	97->			MP0166	60652014	Back ABS 48 poles
2.0 16V T.SPARK	97-02	MP0244	51813925			
2.0 JTS	01-05			MP0242	51757885	
2.0 JTS	01-05	MP0244	51813925			
3.2 GTA	02->	MP0082	60510369			

follow ALFA ROMEO

MODELLO MODEL	ANNO YEAR	ANT CORAM FRONT CORAM	ANT ORIGINALE FRONT ORIGINAL	POST CORAM REAR CORAM	POST ORIGINALE REAR ORIGINAL	NOTE NOTES
ALFA 156 Sportwagon						
1.6 16V T.SPARK - 1.9 JTD - 2.4 JTD	00-06			MP0242	51757885	
1.6 16V T.SPARK - 1.9 JTD - 2.4 JTD	00-06	MP0244	51813925			
1.8 16V T.SPARK - 2.5 V6 24V	97-06			MP0242	51757885	
1.8 16V T.SPARK - 2.5 V6 24V	97-06	MP0244	51813925			
1.9 JTD 16V - 2.0 JTS - 3.2 GTA	02-06			MP0242	51757885	
1.9 JTD 16V - 2.0 JTS - 3.2 GTA	02-06	MP0244	51813925			
1.9 JTD 16V Q4	04-06			MP0242	51757885	
1.9 JTD 16V Q4	04-06	MP0244	51813925			
2.0 16V T.SPARK	00-02			MP0242	51757885	
2.0 16V T.SPARK	00-02	MP0244	51813925			
ALFA 159						
1.8 MPI - 1.9 JTDM 16V - 1.9 JTDM 8V - 1.9 JTS - 2.2 JTS - 2.4 JTDM - 3.2 JTS Q4	05-11			MP0237	50702890	
1.8 Tbi	09-12			MP0237	50702890	
2.0 JTDM	09-11			MP0237	50702890	
2.4 JTDM Q4	07-11			MP0237	50702890	
3.2 JTS	08-11			MP0237	50702890	
ALFA 159 Sportwagon						
1.8 MPI	05-11			MP0237	50702890	
1.8 Tbi - 2.0 JTDM	09-11			MP0237	50702890	
1.9 JTDM 16V - 1.9 JTDM 8V - 1.9 JTS - 2.2 JTS - 2.4 JTDM - 3.2 JTS Q4	06-11			MP0237	50702890	
2.4 JTDM Q4	07-11			MP0237	50702890	
3.2 JTS	08-11			MP0237	50702890	

follow ALFA ROMEO

MODELLO MODEL	ANNO YEAR	ANT CORAM FRONT CORAM	ANT ORIGINALE FRONT ORIGINAL	POST CORAM REAR CORAM	POST ORIGINALE REAR ORIGINAL	NOTE NOTES
ALFA 164						
164 Turbo-164 USA	87-92			MP0085	82469109	ABS 90 teeth
164 Turbo-164 USA	87-92			MP0083	60510129	
164 USA	93-95			MP0084	60568138	
2.0	->92	MP0022	60800548			
2.0 ABS 90 denti	87-92			MP0030	60807234	
2.0 Cil. Turbo	87-92	MP0082	60510369			
2.0 T.S. FL/92	92-97	MP0118	60809668	MP0031	82462175	
2.0 T-2.5-3.0 V6	90-97	MP0082	60510369			
2.0 TS	87-92			MP0028	608088829	
2.0 TS ABS 44 denti	93-98			MP0031	82462175	
2.0 Turbo (4 cyl.) - 3.0 V6 -2.5 Turbo Diesel	87-92			MP0083	60510129	
2.0 V6 Turbo ABS 44 denti	91-98			MP0084	60568138	
2.5 Turbo Diesel ABS 44 denti - 3.0 V6 ABS 44 denti	93-98			MP0084	60568138	
2.5 Turbo Diesel ABS 90 denti-3.0 V6 ABS 90 denti	87-92			MP0085	82469109	
4X4 Super	92-97			MP0087	60613615	
Super 2.0		MP0022	60800548			
Super 2.0 V6-2.5 Turbo Diesel-3.0 V6	87-97	MP0082	60510369			
ALFA 166						
2.0 T.Spark - 2.4 JTD - 2.5 V6 24V - 3.0 V6 24V	98-07	MP0244	51813925			
2.0 TB V6 12v- 2.0 T.S. 16v-2.4 JTD-2.4 JTD 20v-2.5 V6 24 v- 3.0 V6 24v-3.2 V6 24v	98->	MP0167	60815160			
2.0 V6	98-00	MP0244	51813925			
3.2 V6 24V	03-07	MP0244	51813925			
ALFA 33						
Tutti i tipi/ All types / Tous types	->90	MP0039	60501373			
Tutti i tipi/ All types / Tous types	90->	MP0040	60559321			
ALFA SUD SPRINT						
Tutti i tipi/All types/Tous types		MP0039	60501373			
ARNA						
1.2 L/SL-1.3 TI		MP0039	60501373			
BRERA						
1.8 Tbi - 2.0 JTDM	09-10			MP0237	50702890	
2.2 JTS - 2.4 JTDM 20V - 3.2 JTS Q4	06-11			MP0237	50702890	
3.2 JTS	08-10			MP0237	50702890	

follow ALFA ROMEO

MODELLO MODEL	ANNO YEAR	ANT CORAM FRONT CORAM	ANT ORIGINALE FRONT ORIGINAL	POST CORAM REAR CORAM	POST ORIGINALE REAR ORIGINAL	NOTE NOTES
GIULIETTA						
1.4 BiFuel	11-17	MP0244	51813925			
1.4 TB - 1.6 JTDM - 2.0 JTDM	10->	MP0244	51813925			
1.8 TBi	10-16	MP0244	51813925			
GIULIETTA Cassone						
1.4	11->	MP0244	51813925			
GT						
Tutti i tipi/All types/Tous types	03->			MP0166	60652014	ABS 48 poles
1.8 TS - 1.9 JTD - 2.0 JTS - 3.2 GTA	03-10			MP0242	51757885	
1.8 TS - 1.9 JTD - 2.0 JTS - 3.2 GTA	03-10	MP0244	51813925			
1910 JTD 16v-2.0 JTS	03->	MP0081	60563372			
3.2 6V	03->	MP0082	60510369			
GTV						
1.8 16V	98-05	MP0261	82466910			
1.8 -2.0	95->	MP0086	60811032	MP0087	60613615	
2.0 JTS	03-05	MP0261	82466910			
2.0 T.SPARK 16V	95-05	MP0261	82466910			
2.0 V6-2.0 T.S. CUP-3.0 24v-3.0 V6 24v	95->	MP0081	60563372	MP0087	60613615	
3.2 V6 24 v	98->	MP0082	60510369			
SPIDER						
1.8 16V	98-05	MP0261	82466910			
1.8 TBi	09-11			MP0237	50702890	
1.8 TBi	09-11	MP0261	82466910			
1.8-2.0- 2.0 T. Spark 16v	95->	MP0086	60811032	MP0087	60613615	Back ABS 44 teeth
2.0 JTDM	09-10			MP0237	50702890	
2.0 JTS	03-05	MP0261	82466910			
2.0 T.SPARK 16V	95-05	MP0261	82466910			
2.0 V6-3.0 V6	95->	MP0081	60563372	MP0087	60613615	Back ABS 44 teeth
2.2 JTS - 2.4 JTDM - 3.2 JTS Q4	06-11			MP0237	50702890	
3.2 V6 24v	98->	MP0082	60510369			

AUDI

MODELLO MODEL	ANNO YEAR	ANT CORAM FRONT CORAM	ANT ORIGINALE FRONT ORIGINAL	POST CORAM REAR CORAM	POST ORIGINALE REAR ORIGINAL	NOTE NOTES
100						
1.8 , 2.0 cc ; 2.0 CD ; 2.0 Turbo Diesel; CD 2.0, 2.2 i ; CD 2.3 i CD	83-90	MP0044	443407615A			
2.0 16v-2.0 16v Avant-2.5 TDI/TDI Avant	90->	MP0089	4A0407615D	MP0168	4A0501117A	Back drum brake
80						
Tutti i tipi/All types/Tous types	87-92	MP0042	893407615A			
1.3 cc-1.6 cc-1.6 cc Turbo Diesel	85-86	MP0041	823407615A	MP0046	357501117A	
1.3 CC-1.6-1.6 CC-1.6 CC Turbodiesel-1.6 CD Turbodiesel-1.6 Turbodiesel-1.8-1.8 CD-1.8E/S-1.8GTE-1.8 Serret	85-91			MP0168	4A0501117A	Disc brake
1.6 CD Turbo Diesel -1.8 CD-1.8 GTE	85-86			MP0046	357501117A	
1.6-1.6 Turbodiesel-1.8-1.8 E/S-1.8 Se rret-1.8 S Serret	87-91	MP0043	893407615B	MP0088	357501117	Back drum brake
1.8 E Quattro	87-91	MP0043	893407615B	MP0043	893407615B	
1.9 TDI-2.0-2.0 E-2.0 16v	92->	MP0045	893407615D	MP0168	4A0501117A	back drum brake
90						
Tutti i tipi/All types/Tous types	08/86-88	MP0042	893407615A			
1.6 Turbo Diesel-2.0 E	85->	MP0041	823407615A	MP0168	4A0501117A	Disc brake
1.6 Turbo Diesel-2.0-2.0 Quattro-2.0 E	87->			MP0088	357501117	Disc brake
1.6 Turbo Diesel-2.0E	87->	MP0043	893407615B			
2.0 20v Quattro	87->	MP0043	893407615B	MP0043	893407615B	
2.2 E Quattro	85-86	MP0044	443407615A			
A2						
1.2 TDI	01-02			MP0169	6E0598611	ABS 48 poles
1.4 - 1.4 TDI	00-02	MP0170	6Q0407621AH	MP0171	6Q0598611	ABS 48 poles

follow AUDI

MODELLO MODEL	ANNO YEAR	ANT CORAM FRONT CORAM	ANT ORIGINALE FRONT ORIGINAL	POST CORAM REAR CORAM	POST ORIGINALE REAR ORIGINAL	NOTE NOTES
A3						
Tutti i tipi/All types/Tous types	96-02			MP0090	1J0501477A	
1.0 TFSI	16->	MP0234	1K0498621			
1.2 TSI	10-16	MP0234	1K0498621			
1.4 TFSI	07-16	MP0234	1K0498621			
1.4 TSI	14->	MP0234	1K0498621			
1.5 TFSI	17->	MP0234	1K0498621			
1.6 - 2.0 TDI 16V	03-12	MP0234	1K0498621			
1.6 -1.8 T -1.9 TDI	->03	MP0150	1J0407613C			
1.6 FSI	03-07	MP0234	1K0498621			
1.6 TDI	09->	MP0234	1K0498621			
1.8 T Quattro Amb.-1.9 TDI Quatto Amb.	->00	MP0150	1J0407613C	MP0150	1J0407613C	
1.8 TFSI - S3 quattro	06->	MP0234	1K0498621			
1.8 TFSI quattro	08->	MP0234	1K0498621			
1.9 TDI	03-10	MP0234	1K0498621			
2.0 FSI	03-08	MP0234	1K0498621			
2.0 TDI	03->	MP0234	1K0498621			
2.0 TDI 16V quattro	04-12	MP0234	1K0498621			
2.0 TDI quattro	03-16	MP0234	1K0498621			
2.0 TFSI - 2.0 TFSI quattro	04->	MP0234	1K0498621			
3.2 V6 quattro	03-09	MP0234	1K0498621			
Nuova A3		MP0172	1T0498621	MP0173	1K0501611E	ABS 48 poles
A3 Limousine						
1.0 TFSI	16-18	MP0234	1K0498621			
1.2 TFSI - 1.4 TFSI - 1.6 TDI - 1.8 TFSI - 1.8 TFSI quattro - 2.0 TDI - 2.0 TDI quattro - S3 quattro	13->	MP0234	1K0498621			
1.5 TFSI	17-18	MP0234	1K0498621			
1.6 TDI quattro	15->	MP0234	1K0498621			
2.0 TFSI - 2.0 TFSI quattro	16->	MP0234	1K0498621			
30 TFSI	18->	MP0234	1K0498621			

follow AUDI

MODELLO MODEL	ANNO YEAR	ANT CORAM FRONT CORAM	ANT ORIGINALE FRONT ORIGINAL	POST CORAM REAR CORAM	POST ORIGINALE REAR ORIGINAL	NOTE NOTES
A3 Sportback						
1.0 TFSI	16->	MP0234	1K0498621			
1.2 TFSI	13-16	MP0234	1K0498621			
1.2 TSI	10-13	MP0234	1K0498621			
1.4 TFSI	07-16	MP0234	1K0498621			
1.4 TFSI e-tron	14->	MP0234	1K0498621			
1.4 TFSI g-tron	13->	MP0234	1K0498621			
1.4 TSI	14-16	MP0234	1K0498621			
1.5 TFSI	17->	MP0234	1K0498621			
1.6 - 2.0 TDI 16V	04-13	MP0234	1K0498621			
1.6 FSI	04-07	MP0234	1K0498621			
1.6 TDI	09->	MP0234	1K0498621			
1.6 TDI quattro	15-16	MP0234	1K0498621			
1.8 TFSI - 1.8 TFSI quattro	06->	MP0234	1K0498621			
1.9 TDI	04-10	MP0234	1K0498621			
2.0 FSI	04-08	MP0234	1K0498621			
2.0 TDI	04-16	MP0234	1K0498621			
2.0 TDI 16V quattro	05-16	MP0234	1K0498621			
2.0 TDI quattro	06-16	MP0234	1K0498621			
2.0 TFSI - 2.0 TFSI quattro	04->	MP0234	1K0498621			
3.2 V6 quattro	04-09	MP0234	1K0498621			
30 TFSI - 40 TFSI	18->	MP0234	1K0498621			
S3 quattro	08->	MP0234	1K0498621			

follow AUDI

MODELLO MODEL	ANNO YEAR	ANT CORAM FRONT CORAM	ANT ORIGINALE FRONT ORIGINAL	POST CORAM REAR CORAM	POST ORIGINALE REAR ORIGINAL	NOTE NOTES
A4						
1.6 - 1.8 T - 1.8 T Quattro - 1.9 TDI - 2.0	00-08	MP0259	4D0407625D			
1.6 - 1.8 T - 1.9 TDI - 2.0	00-08			MP0260	8E0598611	
1.6-1.8-1.8 T/T-1.9 TDI -2.5 V6 TDI	->00	MP0091	8D0407615B	MP0168	4A0501117A	
1.8 T Quattro	99->	MP0089	4A0407615D	MP0089	4A0407615D	
1.8 TFSI - 2.0 TDI	07-15			MP0235	4H0498625F	with ABS
1.8 TFSI quattro	08-12			MP0235	4H0498625F	with ABS
1.9 TDI quattro - 2.4	01-04	MP0259	4D0407625D			
2.0 FSI	02-04	MP0259	4D0407625D			
2.0 FSI	02-04			MP0260	8E0598611	
2.0 TDI - 2.0 TDI 16V - 2.0 TFSI	04-08			MP0260	8E0598611	
2.0 TDI - 2.0 TDI 16V - 2.0 TFSI - 2.0 TFSI quattro - 3.0 TDI quattro	04-08	MP0259	4D0407625D			
2.0 TDI quattro	06-08	MP0259	4D0407625D			
2.0 TDI quattro - 2.0 TFSI - 2.0 TFSI quattro - S4 quattro	08-15			MP0235	4H0498625F	with ABS
2.4	01-04			MP0260	8E0598611	
2.5 TDI	01-06	MP0259	4D0407625D			
2.5 TDI	01-06			MP0260	8E0598611	
2.5 TDI quattro - 3.0	00-04	MP0259	4D0407625D			
2.7 TDI - 3.0 TDI quattro - 3.2 FSI quattro	07-12			MP0236	4H0498625F	with ABS
2.7 TDI - 3.2 FSI - 3.2 FSI quattro	05-08			MP0260	8E0598611	
2.7 TDI - 3.2 FSI - 3.2 FSI quattro - RS4 quattro	05-08	MP0259	4D0407625D			
2.8 V6 Quattro	->99	MP0045	893407615D			
3.0 - 3.0 quattro	00-04			MP0260	8E0598611	
3.0 quattro	00-06	MP0259	4D0407625D			
3.0 V6 Quattro	01->			MP0089	4A0407615D	
3.2 FSI	08-12			MP0236	4H0498625F	with ABS
S4 quattro	03-08	MP0259	4D0407625D			

follow AUDI

MODELLO MODEL	ANNO YEAR	ANT CORAM FRONT CORAM	ANT ORIGINALE FRONT ORIGINAL	POST CORAM REAR CORAM	POST ORIGINALE REAR ORIGINAL	NOTE NOTES
A4 Avant						
1.6 - 1.8 T - 1.8 T quattro - 1.9 TDI - 2.0	01-08	MP0259	4D0407625D			
1.6 - 1.8 T - 1.9 TDI - 2.0	01-08			MP0260	8E0598611	
1.9 TDI quattro - 2.4 - 2.5 TDI quattro	01-04	MP0259	4D0407625D			
2.0 FSI	02-04	MP0259	4D0407625D			
2.0 FSI	02-04			MP0260	8E0598611	
2.0 TDI - 2.0 TDI 16V - 2.0 TFSI - 2.0 TFSI quattro	04-08			MP0260	8E0598611	
2.0 TDI - 2.0 TDI 16V - 2.0 TFSI - 2.0 TFSI quattro - 3.0 TDI quattro	04-08	MP0259	4D0407625D			
2.0 TDI quattro	06-08	MP0259	4D0407625D			
2.4 - 3.0 quattro	01-04			MP0260	8E0598611	
2.5 TDI - 3.0	01-06			MP0260	8E0598611	
2.5 TDI - 3.0 - 3.0 quattro	01-06	MP0259	4D0407625D			
2.7 TDI	06-08	MP0259	4D0407625D			
2.7 TDI	06-08			MP0260	8E0598611	
2.7 TDi - 3.2 FSI	05-08			MP0260	8E0598611	
2.7 TDi - 3.2 FSI - 3.2 FSI quattro - RS4 quattro	05-08	MP0259	4D0407625D			
RS4 quattro	00-01	MP0259	4D0407625D			
S4 quattro	03-08	MP0259	4D0407625D			
A4 Cabriolet						
1.8 T - 2.4 - 2.5 TDI - 3.0	02-05			MP0235	4H0498625F	with ABS
1.8 T - 2.4 - 2.5 TDI - 3.0	02-05	MP0259	4D0407625D			
1.8 T - 2.4 - 2.5 TDI - 3.0	02-05			MP0260	8E0598611	
1.8 T quattro - 3.0 quattro	03-05			MP0235	4H0498625F	with ABS
1.8 T quattro - 3.0 quattro	03-05	MP0259	4D0407625D			
2.0	04-05			MP0260	8E0598611	
2.0 - S4 quattro	04-05			MP0235	4H0498625F	with ABS
2.0 - S4 quattro	04-05	MP0259	4D0407625D			
2.0 TDI - 2.0 TFSI 16V - 2.7 TDI - 3.0 TDI quattro - 3.2 FSI - 3.2 FSI quattro	06-09			MP0235	4H0498625F	with ABS
2.0 TDI - 2.0 TFSI 16V - 2.7 TDI - 3.0 TDI quattro - 3.2 FSI - 3.2 FSI quattro	06-09	MP0259	4D0407625D			
2.0 TDI - 2.0 TFSI 16V - 2.7 TDI - 3.2 FSI	06-09			MP0260	8E0598611	
RS4 quattro	06-08			MP0235	4H0498625F	with ABS
RS4 quattro	06-08	MP0259	4D0407625D			
A5						
1.8 TFSI - 3.0 TDI quattro	07-17			MP0235	4H0498625F	with ABS
2.0 TDI - 2.0 TDI quattro - 2.0 TFSI - 2.0 TFSI quattro	08-17			MP0235	4H0498625F	with ABS
2.7 TDI - 3.2 FSI - 3.2 FSI quattro - S5 quattro	07-12			MP0236	4H0498625F	with ABS
RS5 quattro	10-17			MP0236	4H0498625F	with ABS
A5 Cabriolet						
3.0 TDI quattro	09-12			MP0236	4H0498625F	with ABS

follow AUDI

MODELLO MODEL	ANNO YEAR	ANT CORAM FRONT CORAM	ANT ORIGINALE FRONT ORIGINAL	POST CORAM REAR CORAM	POST ORIGINALE REAR ORIGINAL	NOTE NOTES
A5 Sportback						
2.0 TFSI	09-14			MP0236	4H0498625F	with ABS
2.7 TDI - 3.2 FSI quattro	09-14			MP0236	4H0498625F	with ABS
A6						
Tutti i tipi/All types/Tous types	96-97			MP0168	4A0501117A	
1.8 - 1.8 T - 1.8 T quattro - 2.4 - 2.4 quattro - 2.5 TDI - 2.5 TDI quattro - 2.7 T quattro - 2.8 - 2.8 quattro	97-05	MP0259	4D0407625D			
1.8 T	01->	MP0091	8D0407615B			
1.9 TDI	00-05	MP0259	4D0407625D			
2.0 - 3.0 - 3.0 quattro	01-05	MP0259	4D0407625D			
2.0E - 2.5 TDI	->08/97	MP0089	4A0407615D			
2.7 T - S6 quattro	99-05	MP0259	4D0407625D			
4.2 quattro	98-05	MP0259	4D0407625D			
RS6 quattro	02-05	MP0259	4D0407625D			
A6 Avant						
1.8 - 1.8 T - 1.8 T quattro - 2.4 - 2.4 quattro - 2.5 TDI - 2.5 TDI quattro - 2.7 T quattro - 2.8	97-05	MP0259	4D0407625D			
1.9 TDI - 2.0	00-05	MP0259	4D0407625D			
2.7 T - S6 quattro	99-05	MP0259	4D0407625D			
2.8 quattro	97-05	MP0259	4D0407625D			
3.0 - 3.0 quattro	01-05	MP0259	4D0407625D			
4.2 quattro	98-05	MP0259	4D0407625D			
RS6 plus quattro	04-05	MP0259	4D0407625D			
RS6 quattro	02-05	MP0259	4D0407625D			
A8						
2.5 TDI - 2.5 TDI quattro	97-02	MP0259	4D0407625D			
2.8 - 2.8 quattro - S8 quattro	96-02	MP0259	4D0407625D			
3.3 TDI quattro	00-02	MP0259	4D0407625D			
3.7 - 3.7 quattro - 4.2 quattro	98-02	MP0259	4D0407625D			
6.0 W12 quattro	01-02	MP0259	4D0407625D			
ALLROAD						
2.5 TDI Quattro-2.7 T Quattro		MP0089	4A0407615D			
CABRIOLET						
2.0E-2.3E-2.8EV6	->98	MP0045	893407615D			
Cabrio	92-00			MP0168	4A0501117A	

follow AUDI

MODELLO MODEL	ANNO YEAR	ANT CORAM FRONT CORAM	ANT ORIGINALE FRONT ORIGINAL	POST CORAM REAR CORAM	POST ORIGINALE REAR ORIGINAL	NOTE NOTES
COUPE'						
Tutti i tipi/All types/Tous types	81-96			MP0168	4A0501117A	
2.0 E	91->	MP0045	893407615D			
2.8 E V6 Quattro	91-96			MP0043	893407615B	
Q5						
2.0 TDI	10-17			MP0236	4H0498625F	with ABS
2.0 TFSI quattro - 3.0 TDI quattro	08-17			MP0236	4H0498625F	with ABS
3.2 FSI quattro	08-12			MP0236	4H0498625F	with ABS
TT						
1.8 T Quattro Roadster/Coupè				MP0150	1J0407613C	
Roadster-TT	98->			MP0090	1J0501477A	

AUTOBIANCHI

MODELLO MODEL	ANNO YEAR	ANT CORAM FRONT CORAM	ANT ORIGINALE FRONT ORIGINAL	POST CORAM REAR CORAM	POST ORIGINALE REAR ORIGINAL	NOTE NOTES
A112						
Tutti i tipi/All types/Tous types		MP0003	4399777			
Tutti i tipi/All types/Tous types	05/84-86	MP0003	4399777	MP0002	4344535	
A112 E - ABARTH	70-76	MP0003	4399777	MP0001	4214408	
A112 E - ABARTH	09/76-05/84	MP0003	4399777	MP0002	4344535	
Y10						
1.000-1.100-1.300	85-95	MP0006	4400918	MP0032	7603485	
4X4	87-95	MP0006	4400918	MP0018	7538260	

BMW

MODELLO MODEL	ANNO YEAR	ANT CORAM FRONT CORAM	ANT ORIGINALE FRONT ORIGINAL	POST CORAM REAR CORAM	POST ORIGINALE REAR ORIGINAL	NOTE NOTES
316						
E30	82-91	MP0093	31211131297	MP0094	33411131118	
E30 ABS	82-91	MP0093	31211131297	MP0094	33411131118	
E36 i -E46 i	90->	MP0092	31221139345	MP0174	33411093567	

follow BMW

MODELLO MODEL	ANNO YEAR	ANT CORAM FRONT CORAM	ANT ORIGINALE FRONT ORIGINAL	POST CORAM REAR CORAM	POST ORIGINALE REAR ORIGINAL	NOTE NOTES
318						
318i 318i Touring-is- tds Touring-is Coupè-i Cabrio-d-Ci-d Attiva-d Futura	82-90 90->			MP0094 MP0174	33411131118 33411093567	
E30 - E30i-E30 i Touring-E30is	82-91	MP0093	31211131297			
E30 ABS	82-1	MP0093	31211131297			
E36 i-E46i-E36i Coupè-E36i Touring-E36is-E36tds Compact/Touring-E36 ti M42	89-99	MP0092	31221139345			
320						
320i-d-Ci	90->			MP0174	33411093567	
E30i	82-90	MP0093	31211131297	MP0094	33411131118	
E30i ABS	82-93	MP0093	31211131297			
E36i	91-99	MP0092	31221139345			
323						
E30 i	81-86	MP0093	31211131297			
E30 i ABS	81-86	MP0093	31211131297			
E36 i	94-08/98	MP0092	31221139345			
E36 ti Compact - E46 i	97-08/98	MP0092	31221139345			
324						
324 D	82-90			MP0094	33411131118	
E30	81-91	MP0093	31211131297			
E30 ABS	81-91	MP0093	31211131297			
325						
325i E36	91-99	MP0092	31221139345			
E (E30) ABS-E30i ABS-E30ic Cabriolet ABS	85-92	MP0093	31211131297			
E (E30)-E30i-E30i/5 Touring-E30ic Cabriolet	85-93	MP0093	31211131297			
tds Touring- Ci	90->			MP0174	33411093567	
328						
E36i-E46i TT	94-08/98	MP0092	31221139345			
518						
E34 Touring TT	92-96	MP0092	31221139345			
E34i MOT. M40	03/91-94	MP0092	31221139345			
E34i MOT. M40 ABS	11/91-94	MP0092	31221139345			
E34i MOT. M43 ABS	11/91-95	MP0092	31221139345			

follow BMW						
MODELLO MODEL	ANNO YEAR	ANT CORAM FRONT CORAM	ANT ORIGINALE FRONT ORIGINAL	POST CORAM REAR CORAM	POST ORIGINALE REAR ORIGINAL	NOTE NOTES
520						
E34i MOT. M50 E34i MOT. M50 ABS E34i Touring	03/91-95 11/91-95 90-96	MP0092 MP0092 MP0092	31221139345 31221139345 31221139345			
524						
E34 TD	91	MP0092	31221139345			
525						
E34i MOT. M50 E34i MOT. M50 ABS E34i Touring-E34 TD-E34 TDS	03/91-95 11/91-12/95 90-97	MP0092 MP0092 MP0092	31221139345 31221139345 31221139345			
530						
E34i MOT. M60 E34i Touring	92-95 92-96	MP0092 MP0092	31221139345 31221139345			
535						
E34i ABS	91-97	MP0092	31221139345			
540						
E34i ABS E34i Touring	92-95 93-96	MP0092 MP0092	31221139345 31221139345			
730						
E32i MOT.M30-M30 EDC-M60	91-94	MP0092	31221139345			
735						
E32i-E32iL E32i-E32iL EDC	91-94 91-94	MP0092 MP0092	31221139345 31221139345			
740						
E32 TT	11/91-94	MP0092	31221139345			

follow BMW

MODELLO MODEL	ANNO YEAR	ANT CORAM FRONT CORAM	ANT ORIGINALE FRONT ORIGINAL	POST CORAM REAR CORAM	POST ORIGINALE REAR ORIGINAL	NOTE NOTES
750						
E32i-E32iL E32i-E32iL EDC	11/91-94 02/92-94	MP0092 MP0092	31221139345 31221139345			
850						
E31 Ci Coupè MOT. M70-M73 E31 Coupè i	92-98 03/92-94	MP0092 MP0092	31221139345 31221139345			
M3						
E36 - E36 Cabriolet	92-99	MP0092	31221139345			
Z3						
1.8 E36-1.9 M43 E36-1.9 M44 E36-2.8 E36-3.2 E36	94->	MP0092	31221139345			

CADILLAC

MODELLO MODEL	ANNO YEAR	ANT CORAM FRONT CORAM	ANT ORIGINALE FRONT ORIGINAL	POST CORAM REAR CORAM	POST ORIGINALE REAR ORIGINAL	NOTE NOTES
BLS						
1.9 D	07->	MP0241	93186387			

CHEVROLET

MODELLO MODEL	ANNO YEAR	ANT CORAM FRONT CORAM	ANT ORIGINALE FRONT ORIGINAL	POST CORAM REAR CORAM	POST ORIGINALE REAR ORIGINAL	NOTE NOTES
AVEO						
Tutti i tipi/All types/Tous types 1.6		MP0230 MP0229	96549779 96535041			
CRUZE						
1.6 - 1.8 1.7 D 1.8 LPG 2.0 CDI	09-> 12-> 11-> 09-11	MP0258 MP0258 MP0258 MP0258	13502829 13502829 13502829 13502829			
CRUZE 2 volumi						
1.6 - 1.8 - 2.0 CDI 1.7 D	11-> 12-15	MP0258 MP0258	13502829 13502829			

follow CHEVROLET

MODELLO MODEL	ANNO YEAR	ANT CORAM FRONT CORAM	ANT ORIGINALE FRONT ORIGINAL	POST CORAM REAR CORAM	POST ORIGINALE REAR ORIGINAL	NOTE NOTES
CRUZE Station wagon						
1.4 - 1.7 TD - 1.8 - 2.0 TD 1.6	12->\ 12-15	MP0258 MP0258	13502829 13502829			
MALIBU						
2.0 D - 2.4	12->	MP0257	13580135			
ORLANDO						
1.4 1.8 2.0 D	12->\ 11->\ 11-15	MP0258 MP0258 MP0258	13502829 13502829 13502829			

CHRYSLER

MODELLO MODEL	ANNO YEAR	ANT CORAM FRONT CORAM	ANT ORIGINALE FRONT ORIGINAL	POST CORAM REAR CORAM	POST ORIGINALE REAR ORIGINAL	NOTE NOTES
TOWN & COUNTRY						
Tutti i tipi/All types/Tous types	90-95	MP0175	4641517			"15"" wheel"
VOYAGER						
2.0 16v SE-2.4 16V LE-2.4 LS/LX-2.5 TD LE/SE-2.5 CRD LE/LS-3.3 LX 2.5 TD SE- 2.5 CRD Limited/LS-3.3 AWD/Limited-3.8 V6 AWD LX	92->\ 95->\	MP0175 MP0175	4641517 4641517			"15"" wheel" "15"" wheel"

CITROEN

MODELLO MODEL	ANNO YEAR	ANT CORAM FRONT CORAM	ANT ORIGINALE FRONT ORIGINAL	POST CORAM REAR CORAM	POST ORIGINALE REAR ORIGINAL	NOTE NOTES
AX						
Tutti i tipi/All types/Tous types		MP0095	330762			
BERLINGO						
Tutti i tipi/All types/Tous types Tutti i tipi/All types/Tous types 1.4 Multispace/ Multispace PLS Clim-1.4 SX-1.8 Multispace PLS Clim-1.9 D Enterprise Furgone-1.9 D SX	96->\ 96->\ ->97	MP0096	330769	MP0176 MP0177	374828 374836	Only wheel hub ABS 29 teeth; only wheel hub

follow CITROEN

MODELLO MODEL	ANNO YEAR	ANT CORAM FRONT CORAM	ANT ORIGINALE FRONT ORIGINAL	POST CORAM REAR CORAM	POST ORIGINALE REAR ORIGINAL	NOTE NOTES
BX						
1.1	86-92			MP0215	9558882680	
1.4 - 1.6 E	89-93			MP0215	9558882680	
1.4 E - 1.6	82-93			MP0215	9558882680	
1.4-1.6-1.7-1.9	09/84-86	MP0096	330769			
1.4-1.6-1.7-1.9 ABS	87->	MP0096	330769			
1.5	87-92			MP0215	9558882680	
1.8 D	85-93			MP0215	9558882680	
1.9 D	83-93			MP0215	9558882680	
1.9 E - TRD Turbo	88-93			MP0215	9558882680	
1.9 Gti	86-93			MP0215	9558882680	
1.9 Gti 16 V	87-93			MP0215	9558882680	
BX Break						
1.4	89-93			MP0215	9558882680	SW
1.5	87-92			MP0215	9558882680	SW
1.6	85-94			MP0215	9558882680	SW
1.8 D	85-93			MP0215	9558882680	SW
1.9 - 1.9 Cat	86-94			MP0215	9558882680	SW
1.9 D	83-94			MP0215	9558882680	SW
1.9 TRD Turbo	83-94			MP0215	9558882680	SW
C1						
1.0 - 1.4 Hdi	05-14			MP0238	374885	
C15						
1.0	84-97			MP0215	9558882680	Van
1.1	84-96			MP0215	9558882680	Van
1.1 i	88-96			MP0215	9558882680	Van
1.4 - 1.4 E	87-96			MP0215	9558882680	Van
1.4 Break/Club Break-1.7 D Break/Club Break		MP0069	330749			
1.4 i	91-96			MP0215	9558882680	Van
1.8 D	86-00			MP0215	9558882680	Van
C2						
Tutti i tipi/All types/Tous types	03->	MP0098	330776			
1.1- 1.4-1.4 HDI- 1.6	03->			MP0226	3748.76	
1.4 16V	06->			MP0226	3748.76	
1.6 Hdi- 1.6 VTS	05->			MP0226	3748.76	

follow CITROEN

MODELLO MODEL	ANNO YEAR	ANT CORAM FRONT CORAM	ANT ORIGINALE FRONT ORIGINAL	POST CORAM REAR CORAM	POST ORIGINALE REAR ORIGINAL	NOTE NOTES
C25 Autobus						
1.8 E - 1.9 D	87-94	MP0105	7569715			
2.0 E	81-94	MP0105	7569715			
2.5 D	85-94	MP0105	7569715			
2.5 D 4x4 - 2.5 D Turbo - 2.5 D Turbo 4x4	87-94	MP0105	7569715			
C25 Furgonato						
2.0 E	81-94	MP0105	7569715			
C3						
1.1 Elegance -1.4 Exclusive/HDI Exclusive -1.6 16v Exclusive		MP0098	330776			
1.1 i - 1.4 16V Hdi - 1.4 Hdi - 1.4 i - 1.4 i Bivalent - 1.6 16V	02>			MP0226	3748.76	
1.4 16V	03>			MP0226	3748.76	
1.6 16V Hdi	05>			MP0226	3748.76	
C3 PLURIEL						
1.4 - 1.6	03>			MP0226	3748.76	
1.4 Hdi	04>			MP0226	3748.76	
C5						
2.0 Excl./Excl.Break -2.0 HDI SX/SX Break-2.0 HPI Excl./Excl.Break-2.2 HDI Excl/Excl. Break		MP0099	330775			
C8						
2.0 HDI 16v Classique/Elegance-2.2 16v Elegance-2.2 HDI 16v Elegance/Executive		MP0097	330764			
EVASION						
Tutti i tipi/All types/Tous types	94-00			MP0178	335028	ABS 48 teeth; only weel hub
1.9-2.0		MP0097	330764			
JUMPER						
Tutti i tipi/All types/Tous types		MP0034	330765			10-14 ql
Tutti i tipi/All types/Tous types		MP0035	330766			18 ql
JUMPER Autobus						
2.2 HDi 100 - 2.2 HDi 120 - 3.0 HDi 160	06->			MP0243	1606374780	
2.2 HDi 110 - 2.2 HDi 130 - 2.2 HDi 150 - 3.0 HDi 180	11->			MP0243	1606374780	
3.0 HDi 155	10->			MP0243	1606374780	

follow CITROEN

MODELLO MODEL	ANNO YEAR	ANT CORAM FRONT CORAM	ANT ORIGINALE FRONT ORIGINAL	POST CORAM REAR CORAM	POST ORIGINALE REAR ORIGINAL	NOTE NOTES
JUMPER Furgonato						
2.2 HDi 100	06-12			MP0243	1606374780	
2.2 HDi 110 - 2.2 HDi 130 - 2.2 HDi 150 - 3.0 HDi 180	11->			MP0243	1606374780	
2.2 HDi 120 - 3.0 HDi 160	06->			MP0243	1606374780	
3.0 HDi 145 - 3.0 HDi 155	10->			MP0243	1606374780	
JUMPER Pianale piatto						
2.2 HDi 100 - 2.2 HDi 120 - 3.0 HDi 160	06->			MP0243	1606374780	
2.2 HDi 110 - 2.2 HDi 130 - 2.2 HDi 150 - 3.0 HDi 180	11->			MP0243	1606374780	
3.0 HDi 145	10->			MP0243	1606374780	
SAXO						
1.1 SX -1.4 VSX 8094 >	->99	MP0098	330776			
1.1 SX-1.4 VSX 8093<	->99	MP0069	330749			
1.1 SX-1.5 D SX- 1.6 VTS	99->	MP0098	330776			
VISA						
D	82->	MP0069	330749			
XANTIA						
Tutti i tipi/All types/Tous types	95->			MP0176	374828	Only weel hub
Tutti i tipi/All types/Tous types	95-99			MP0179	374829	ABS 48 teeth; only weel hub
1.6 i - 1.8 i - 2.0 i - 2.0 i 16V	93-98			MP0215	9558882680	
1.6 SX-1.8 SX/SX Break-1.8 16v SX-1.9 D X-1.9TD SX/SX Break-	96->	MP0096	330769			
1.9 D - 1.9 D Turbo	94-98			MP0215	9558882680	
2.0 HDI-2.1 TD SX Plus Break	98->	MP0099	330775			
XM						
Tutti i tipi/All types/Tous types	89-00			MP0100	374830	
XSARA						
1.4 SP Break-1.6 Exclusive Break-1.6 SP Break 8098<		MP0069	330749			
1.4 SP Break-1.6 Exclusive Break-1.6 SP Break 8099>		MP0098	330776			
1.4 SP Coupè-1.4SX-1.4 XP-1.6 SP Coupè-1.6 SX-1.6 XP		MP0096	330769			ABS
1.4 SP Coupè-1.4SX-1.4 XP-1.6 SP Coupè-1.6 SX-1.6 XP 8098<		MP0069	330749			
1.4 SP Coupè-1.4SX-1.4 XP-1.6 SP Coupè-1.6 SX-1.6 XP 8099>		MP0098	330776			
1.8-1.9-2.0 ABS		MP0096	330769			ABS

follow CITROEN

MODELLO MODEL	ANNO YEAR	ANT CORAM FRONT CORAM	ANT ORIGINALE FRONT ORIGINAL	POST CORAM REAR CORAM	POST ORIGINALE REAR ORIGINAL	NOTE NOTES
XSARA PICASSO						
Tutti i tipi/All types/Tous types	00-01			MP0176	374828	Only weel hub
Tutti i tipi/All types/Tous types	00-01			MP0177	374836	ABS 29 teeth; only weel hub
1.6-1.8 16V-2.0 HDI		MP0096	330769			
ZX						
1.4		MP0069	330749			
1.6-1.9 ABS		MP0096	330769			

DACIA

MODELLO MODEL	ANNO YEAR	ANT CORAM FRONT CORAM	ANT ORIGINALE FRONT ORIGINAL	POST CORAM REAR CORAM	POST ORIGINALE REAR ORIGINAL	NOTE NOTES
LOGAN						
1.2 16V	06->	MP0218	6001547685			
1.4	04->	MP0218	6001547685			
1.5 dCi	05->	MP0219	8200208335			
1.6	04->	MP0218	6001547685			
1.6	04->	MP0219	8200208335			
1.6 16V	06->	MP0219	8200208335			
LOGAN EXPRESS						
1.4	09->	MP0218	6001547685			
1.4	09->	MP0219	8200208335			
1.5 dCi	09->	MP0219	8200208335			
1.6	09->	MP0218	6001547685			
1.6	09->	MP0219	8200208335			
LOGAN MCV						
1.4	07->	MP0218	6001547685			
1.4	07->	MP0219	8200208335			
1.5 dCi	07->	MP0219	8200208335			
1.6	07->	MP0218	6001547685			
1.6	07->	MP0219	8200208335			
1.6 16V	07->	MP0219	8200208335			
LOGAN Pick-up						
1.5 dCi	08->	MP0219	8200208335			
1.6	08->	MP0219	8200208335			

follow DACIA

MODELLO MODEL	ANNO YEAR	ANT CORAM FRONT CORAM	ANT ORIGINALE FRONT ORIGINAL	POST CORAM REAR CORAM	POST ORIGINALE REAR ORIGINAL	NOTE NOTES
SANDERO						
1.2 16V	08->	MP0218	6001547685			
1.4	08->	MP0218	6001547685			
1.4	08->	MP0219	8200208335			
1.5 dCi	08->	MP0219	8200208335			
1.6	08->	MP0218	6001547685			
1.6	08->	MP0219	8200208335			

DAIHATSU

MODELLO MODEL	ANNO YEAR	ANT CORAM FRONT CORAM	ANT ORIGINALE FRONT ORIGINAL	POST CORAM REAR CORAM	POST ORIGINALE REAR ORIGINAL	NOTE NOTES
CHARADE VIII						
1.33 16V	11->			MP0239	42450-0D050	with ABS

DODGE

MODELLO MODEL	ANNO YEAR	ANT CORAM FRONT CORAM	ANT ORIGINALE FRONT ORIGINAL	POST CORAM REAR CORAM	POST ORIGINALE REAR ORIGINAL	NOTE NOTES
CARAVAN						
Tutti i tipi/All types/Tous types	90-95	MP0175	4641517			"15"" wheel"

FIAT

MODELLO MODEL	ANNO YEAR	ANT CORAM FRONT CORAM	ANT ORIGINALE FRONT ORIGINAL	POST CORAM REAR CORAM	POST ORIGINALE REAR ORIGINAL	NOTE NOTES
127						
Tutti i tipi/All types/Tous types	71-05/73			MP0001	4341664	
Tutti i tipi/All types/Tous types	05/73-76			MP0001	4341664	Ch. 1573628 <
Tutti i tipi/All types/Tous types	76-86			MP0002	7599461	Ch. 1573629 >
Tutti i tipi/All types/Tous types	71-86	MP0003	4399777			
128						
Tutti i tipi/All types/Tous types		MP0003	4399777			
Tutti i tipi/All types/Tous types	69-73	MP0003	4399777	MP0001	4214408	Ch.1289825 <
Tutti i tipi/All types/Tous types	73-09/76	MP0003	4399777	MP0001	4214408	Ch. 1289826 >
Tutti i tipi/All types/Tous types	10/76-84	MP0003	4399777	MP0002	7599461	
3p	75-76	MP0003	4399777	MP0001	4214408	Ch. 265621 >
3p	76-79	MP0003	4399777	MP0002	7599461	Ch.265622 >
Rally-Coupè	71-75	MP0003	4399777	MP0001	4214408	

follow FIAT

MODELLO MODEL	ANNO YEAR	ANT CORAM FRONT CORAM	ANT ORIGINALE FRONT ORIGINAL	POST CORAM REAR CORAM	POST ORIGINALE REAR ORIGINAL	NOTE NOTES
500L						
0.9 - 1.3 D Multijet - 1.4	12->	MP0261	82466910			
0.9 Natural Power	13->	MP0261	82466910			
1.4 LPG	14->	MP0261	82466910			
1.6 D Multijet	12-18	MP0261	82466910			
BARCHETTA						
1.8 16 V	95->			MP0033	7603679	
1.8 16 v	95-04/99			MP0080	7769902	ABS 44 teeth
1.8 16 v	05/99->			MP0165	60815429	ABS 48 poles
1.8 16V	95->	MP0022	7595521			
BRAVA						
Tutti i tipi/All types/Tous types	95-98			MP0080	7769902	ABS 44 teeth
1.2 16 v - 1.6 16v -1.8 16v - 1910 JTD	98-00			MP0165	60815429	ABS 48 poles
1.2 16 v -1370 SPI 12v- 1580 MPI 16v-1.6 16v - 1930 DS	95-00	MP0021	7608131			
1.2 16v - 1.6 16v -1.8 16 v - 1910 JTD	98-00			MP0033	7603679	
1.6 16v	98-00	MP0022	7595521			Turkey
1.8 16v-1910 JTD- 1910 TB/DS-1910 TD	98-00	MP0022	7595521			
Cambio automatico	95-98	MP0021	7608131	MP0033	7603679	
BRAVO						
Tutti i tipi/All types/Tous types	95-98			MP0033	7603679	
Tutti i tipi/All types/Tous types	95-98			MP0080	7769902	ABS 44 teeth
1.2 16v - 1.6 16v -1.8 16 v - 1910 JTD - 1910 TD - 2.0 20v	98-00			MP0033	7603679	
1.2 16v - 1.6 16v -1.8 16 v - 1910 JTD - 1910 TD - 2.0 20v	98-00			MP0165	60815429	ABS 48 poles
1.2 16v - 1370 SPI 12v - 1580 MPI 16v - 1.6 16v - 1930 DS	95-00	MP0021	7608131			
2.0 20v	95-00	MP0079	60809805			
CINQUECENTO						
Tutti i tipi/All types/Tous types	92-98	MP0021	7608131	MP0032	7603485	
COUPE'						
1750 16v	93->			MP0033	7603679	
1750 16v - 2.0 - 2.0 Turbo- 2.0 20v 5 cil.	93->			MP0029	7613514	
1750 16v -2.0	93->	MP0022	7595521			
2.0 Turbo - 2.0 20v 5 cil. TB		MP0079	60809805			

follow FIAT

MODELLO MODEL	ANNO YEAR	ANT CORAM FRONT CORAM	ANT ORIGINALE FRONT ORIGINAL	POST CORAM REAR CORAM	POST ORIGINALE REAR ORIGINAL	NOTE NOTES
CROMA						
1.8 16V - 2.2 16V - 2.4 D Multijet	05->	MP0241	51748680			
1.8 16V - 2.2 16V - 2.4 D Multijet	05->			MP0254	1604314	
1.9 D Multijet	05-11	MP0241	51748680			
1.9 D Multijet	05-11			MP0254	1604314	
1.9 Td-2.0-2.0 T-2.5 Td	01/91-02/95	MP0022	82433787			
1.9 Td-2.0-2.0 T-2.5 Td	3/95->	MP0101	7595521			
2.0 16 V ABS 44 denti	93-96			MP0031	82462175	
2.0 16V	93-96			MP0028	82400997	
2.0 i.e.	86-96			MP0028	82400997	
2.0 i.e. ABS 44 denti	11/92-96			MP0031	82462175	Ch. 2025079 >
2.0 i.e. ABS 90 denti	86-11/92			MP0030	82469083	Ch. 2025078 <
2.0 i.e. Turbo	86-96			MP0028	82400997	
2.0 i.e. Turbo ABS 90 denti	86-11/92			MP0030	82469083	Ch. 2025078<
2.0 i.e. Turbo-2.0-2.5 Turbo Diesel ABS 44 denti	11/92-96			MP0031	82462175	Ch. 2025079>
2.0-2.5 Turbo-Diesel	88-96			MP0028	82400997	
2.0-2.5 Turbo-Diesel ABS 90 denti	88-11/92			MP0030	82469083	Ch. 2025078<
2.5 Diesel	86-90			MP0028	82400997	
2.5 Diesel ABS 90 denti	86-90			MP0030	82469083	
2.5 V6 ABS 44 denti	93-96			MP0031	82462175	
CHT 1.6-CHT 2.0	86-92			MP0028	82400997	
CHT 2.0 ABS 44 denti	91-92			MP0031	82462175	Ch. 285589 >
CHT 2.0 ABS 90 denti	86-90			MP0030	82469083	Ch. 285588 <
DOBLO'						
1.2 8v MY.2004- 1242 MPI 8v-1596 16v-1.6 16v -1.9 DS	00->	MP0102	7522385			
1.3 JTD 16v-1.9 JTD -1910 JTD	00->	MP0181	46745258			
DOBLO' Cargo						
1.3 D Multijet - 1.4 - 1.6 D Multijet	10->	MP0261	82466910			
DOBLO' Combi						
1.3 D Multijet - 1.4 - 1.6 D Multijet - 2.0 D Multijet	10->	MP0261	82466910			
DOBLO' Pianale piatto						
1.3 D Multijet - 1.4 - 1.6 D Multijet - 2.0 D Multijet	10->	MP0261	82466910			

follow FIAT

MODELLO MODEL	ANNO YEAR	ANT CORAM FRONT CORAM	ANT ORIGINALE FRONT ORIGINAL	POST CORAM REAR CORAM	POST ORIGINALE REAR ORIGINAL	NOTE NOTES
DUCATO						
4X4 R90- Nuovo Ducato R90	90-94	MP0106	7657422			
94	94-01	MP0035	1307355080			18 ql. Ch. 6194399>
94 - '94 Diesel	01->	MP0182	1328045080			10-14 ql
94 - '94 Diesel	94-01	MP0034	1300472080			
94- '94 Diesel - Ducato Restyl.- 2.0 MPI Restyl. -2.3 JTD Restyl. - 2.8 JTD/TD Restyl.	01->	MP0183	1328053080			18 ql.
autocarro - furgone	-> 89	MP0105	7569715			
Ducato Restyl.-2.0 JTD Restyl. - 2.0 MPI Restyl. -2.3 JTD Restyl. -2.8 JTD/TD Restyl.	02->	MP0182	1328045080			11-15 ql
Furgonato 1.8	82-88	MP0105	7569715			
Furgonato 1.9 D	88-90	MP0105	7569715			
Furgonato 1.9 TD	89-90	MP0105	7569715			
Furgonato 2.0 - 2.4 D - 2.5 D	82-90	MP0105	7569715			
Furgonato 2.5 D 4x4	89-90	MP0105	7569715			
Panorama 1.8	82-88	MP0105	7569715			
Panorama 1.9 D	87-90	MP0105	7569715			
Panorama 1.9 TD	89-90	MP0105	7569715			
Panorama 2.0	82-90	MP0105	7569715			
Panorama 2.4 D	82-85	MP0105	7569715			
Panorama 2.5 D	86-90	MP0105	7569715			
Panorama 2.5 D 4x4 - 2.5 TD	87-90	MP0105	7569715			
Panorama 2.5 TD 4x4	86-90	MP0105	7569715			
Pianale piatto 1.9 D	88-90	MP0105	7569715			
Pianale piatto 1.9 TD - 2.5 D 4x4	89-90	MP0105	7569715			
Pianale piatto 2.0	85-90	MP0105	7569715			
Pianale piatto 2.5 D	82-90	MP0105	7569715			
Pianale piatto 2.5 TD	86-90	MP0105	7569715			
DUCATO Autobus						
100 Multijet 2.2 D	06-11			MP0243	51754942	
110 Multijet 2.3 D - 115 Multijet 2.0 D - 130 Multijet 2.3 D - 150 Multijet 2.3 D - 180 Multijet 3.0 D	11->			MP0243	51754942	
120 Multijet 2.3 D - 160 Multijet 3.0 D	06->			MP0243	51754942	
140 Natural Power	09->			MP0243	51754942	
150 Multijet 3.0 D	10->			MP0243	51754942	
DUCATO Furgonato						
100 Multijet 2.2 D - 120 Multijet 2.3 D - 160 Multijet 3.0 D	06->			MP0243	51754942	
110 Multijet 2.3 D - 115 Multijet 2.0 D - 130 Multijet 2.3 D - 150 Multijet 2.3 D - 180 Multijet 3.0 D	11->			MP0243	51754942	
110 Multijet 2.3 D - 115 Multijet 2.0 D - 130 Multijet 2.3 D - 150 Multijet 2.3 D - 180 Multijet 3.0 D	11->			MP0243	51754942	
120 Multijet 2.3 D 4x4 - 150 Multijet 3.0 D	10->			MP0243	51754942	
120 Multijet 2.3 D 4x4 - 150 Multijet 3.0 D	10->			MP0243	51754942	
140 Natural Power	09->			MP0243	51754942	

follow FIAT

MODELLO MODEL	ANNO YEAR	ANT CORAM FRONT CORAM	ANT ORIGINALE FRONT ORIGINAL	POST CORAM REAR CORAM	POST ORIGINALE REAR ORIGINAL	NOTE NOTES
DUCATO Pianale piatto						
100 Multijet 2.2 D - 120 Multijet 2.3 D - 160 Multijet 3.0 D	06->			MP0243	51754942	
DUNA						
1100 - 1300 - 1700DS	86-90	MP0007	4390949			Ch. 3403306 <
1100 - 1300 - 1700DS	86-90	MP0024	7634578			Ch. 3403307 >
Berlina	86-90			MP0032	7603485	
Weekend	86-90			MP0078	7746191	
FIORINO						
Tutti i tipi/All types/Tous types	88-01			MP0078	7746191	
Tutti i tipi/All types/Tous types	88-93	MP0007	4390949			Ch. 8051674 <
Tutti i tipi/All types/Tous types	88-93	MP0024	7634578			Ch. 8051673 >
1301-1372-1580-1697 TB/DS RL	93-96	MP0102	7522385			
900-1050	78-79			MP0002	5948422	
900-1050-1.3	79-93			MP0017	4459689	
FIORINO Cassone						
1.3 D Multijet	07->	MP0261	82466910			
GRANDE PUNTO						
1.2 - 1.9 D Multijet	05->			MP0233	51787397	
1.3 D Multijet	05-10			MP0233	51787397	
1.4	05-15			MP0233	51787397	
1.4 16V	05-11			MP0233	51787397	
1.4 Natural Power - 1.6 D Multijet	08->			MP0233	51787397	
1.4 T-Jet	07->			MP0233	51787397	
IDEA						
Tutti i tipi/All types/Tous types	04->			MP0165	46512973	ABS 48 poles
1.2 16v - 1.4 16v	04->	MP0021	7608131			
1.3 SDI-1910 JTD	04->	MP0022	7667265			

follow FIAT

MODELLO MODEL	ANNO YEAR	ANT CORAM FRONT CORAM	ANT ORIGINALE FRONT ORIGINAL	POST CORAM REAR CORAM	POST ORIGINALE REAR ORIGINAL	NOTE NOTES
MAREA						
Tutti i tipi/All types/Tous types	96-02			MP0033	7603679	
Tutti i tipi/All types/Tous types	96-99			MP0080	7769902	ABS 44 teeth
Tutti i tipi/All types/Tous types	96-02			MP0165	46512973	ABS 48 poles
1.2 16v - 1370 12v	96-02	MP0021	7608131			
1580 - 1580 16v - 1.6 - 1.6 16v - 1.8 - 1.8 16v - 1910 JTD - 1910 TD	96-02	MP0022	7667265			
2.0 - 2.0 20 v- 2.4 JTD - 2.4 TD	96-02	MP0079	60809805			
MULTIPLA						
Tutti i tipi/All types/Tous types	98->			MP0033	7603679	
Tutti i tipi/All types/Tous types	98->			MP0165	46512973	ABS 48 poles
1580 16v - 1596 16v - 1.6 16v - 1910 JTD	98->	MP0022	7667265			
PALIO						
1.8				MP0216		
1461 MPI Adventure Weekend Extra Europa	02->	MP0102	46798592			
1800		MP0181	46745258			
994 MPI- 1108 CARB. -1.2 SW -1242 - 1372 -1461 - 1580 - 1596 - 1697 - 1.9 -1910	97->	MP0103	46447445			
Palio 2v - Weekend	97->			MP0033	7603679	
Palio 2v - Weekend	97-01			MP0080	7769902	ABS 44 teeth
Palio 2v Extra Europa Rest. '02 - Palio Weekend Europa Rest. '02	02->			MP0165	46512973	ABS 48 poles
PANDA						
"Panda Soluzione ""B"" - 4x4 Soluzione ""B"""		MP0019	5927842			
1.3 16v SDI	03->	MP0022	7667265			
30-45	81-86	MP0006	4400918	MP0014	4400919	
4X4	81-03	MP0006	4400918	MP0018	5963034	
DS - 4X2 MAQ91 - 4X2 RL/86	86-03	MP0006	4400918	MP0032	7603485	
Nuova Panda	03->			MP0033	7750120	
Nuova Panda	03->			MP0165	46512973	ABS 48 poles
PUNTO						
0.9	13->			MP0233	51787397	
0.9 Twinair Turbo - 1.2 - 1.3 D Multijet - 1.4 - 1.4 Bifuel - 1.4 Multi Air - 1.4 Turbo Multi Air	12->			MP0233	51787397	
GT - 1.3 16v SDI-1697 T.D.S.-1.8 16 v - 1.9 JTD-1910 JTD	93->	MP0022	7667265			
GT - Gamma '97 - Cabrio-D-TD - TB.DS. - 55-60-75-90	93-99			MP0080	7769902	ABS 44 teeth
GT-Nuova Punto- Gamma '97 - D-TD - Cabrio-FL. '03- TB.DS. - 55-60-75-90	93->			MP0033	7750120	
Nuova Punto - FL. '03	99->			MP0165	46512973	ABS 48 poles
S/SX/ELX/Sporting/Selecta - 55-60-75-90-1.2 8v/16v- 1242 -1.4 16v - 1580 - 1697 -	93->	MP0021	7608131			

follow FIAT

MODELLO MODEL	ANNO YEAR	ANT CORAM FRONT CORAM	ANT ORIGINALE FRONT ORIGINAL	POST CORAM REAR CORAM	POST ORIGINALE REAR ORIGINAL	NOTE NOTES
PUNTO EVO						
1.2 - 1.4 - 1.4 16V- 1.4 LPG - 1.4 Natural Power - 1.6 D Multijet	09-12			MP0233	51787397	
1.3 D Multijet	08-12			MP0233	51787397	
QUBO						
1.3 D Multijet	08->	MP0261	82466910			
REGATA						
1.6 R/86	86->	MP0025	7641450			
100S-70-70S-70ES-D-DS	->85			MP0002	7599461	
70-70S-100S-D-DS-TDS	86->			MP0002	7599461	
Berlina 100 S-Weekend 100 S		MP0008	5955456			
Berlina 70 D-TDS-Weekend 70-DS-TDS		MP0020	7591328			
Weekend				MP0017	4459689	
RITMO						
Tutti i tipi/All types/Tous types	78-89			MP0002	5948422	
105	->84	MP0008	5955456	MP0002	5948422	
60-65-75-85-D	->81	MP0020	7591328	MP0002	5948422	
60-70	85->	MP0020	7591328	MP0002	5948422	
60-70-85-D	82-84	MP0020	7591328	MP0002	5948422	
SCUDO						
Tutti i tipi/All types/Tous types	95->	MP0097	1311508080	MP0178	1473543080	Back ABS 48 teeth
1580 - 1867 DS -1905 DS - 2.0 JTD 8-16 v	95->	MP0097	1311508080			
SEICENTO						
899 SPI - 1108 MPI/SPI	98->	MP0021	7608131	MP0032	7603485	
Elettra	98->			MP0006	4400918	
SIENA						
1242 - 1372 - 1461 -1580 - 1596 - 1697 - 1910	97->	MP0103	46447445			
Extra Europa	97->			MP0033	7787124	
Extra Europa	97-01			MP0080	7769902	ABS 44 teeth
Extra Europa	02->			MP0165	46512973	ABS 48 poles

follow FIAT

MODELLO MODEL	ANNO YEAR	ANT CORAM FRONT CORAM	ANT ORIGINALE FRONT ORIGINAL	POST CORAM REAR CORAM	POST ORIGINALE REAR ORIGINAL	NOTE NOTES
STILO						
Tutti i tipi/All types/Tous types	01->			MP0165	46512973	ABS 48 poles
1.2 16 v	01-03	MP0021	7608131			
1.4 16v - 1.6 16v - 1.8 16 v	01->	MP0022	7667265			
1.9 JTD	04->	MP0022	7667265			80-115 cv
1.9 JTD	04->	MP0079	60809805			140 cv
2.4 20v	04->	MP0079	60809805			
STRADA						
Tutti i tipi/All types/Tous types	99->			MP0078	7746191	
1242 - 1697 - 1.9 DS	99->	MP0102				
1910 JTD	99->	MP0181	46745258			
TALENTO						
Tutti i tipi/All types/Tous types	90-94	MP0106	7657422			
TEMPRA						
1.4-1.6		MP0021	7608131			
1.4-1.6 ABS	90-92			MP0033	7787124	
1.4-1.6 ABS	93-96			MP0029	7613514	ABS 44 teeth
1.4-1.6-1.8-1.9 Diesel-1.9 Turbo Diesel-2.0	90-96			MP0033	7787124	
1.4-1.6-1.9 D-1.9 D SW	93->	MP0021	7608131			
1.8 SW-2.0SW-1.9 Td SW-Marengo 1.9 Td	->92	MP0022	7667265			
1.8-1.9 Td	93->	MP0022	82433787			
1.8-2.0	->92	MP0021	7608131			
1.8-2.0-1.9 Diesel-1.9 Turbo Diesel ABS	90-96			MP0029	7613514	ABS 44 teeth

follow FIAT

MODELLO MODEL	ANNO YEAR	ANT CORAM FRONT CORAM	ANT ORIGINALE FRONT ORIGINAL	POST CORAM REAR CORAM	POST ORIGINALE REAR ORIGINAL	NOTE NOTES
TIPO						
1.1-1.1 DGT-1.4-1.4 DGT-1.6-1.6 DGT-1.7D-1.7 DGT-1.9D	92->	MP0021	7608131			
1.1-1.4-1.6	88-95			MP0033	7787124	
1.1-1.4-1.6 ABS	88-02/93			MP0033	7787124	
1.1-1.4-1.6 ABS	03/93-95			MP0029	7613514	
1.6 AGT-DGT	89-90			MP0033	7787124	
1.6 Automatic-1.8 i.e.-2.0 i.e.-2.0 16V	91-95			MP0033	7787124	
1.6 Automatic-2.0 16V ABS	91-95			MP0029	7613514	
1.7 Diesel ABS	88-03/93			MP0033	7787124	
1.7 Diesel-1.9 Diesel ABS	04/93-95			MP0029	7613514	
1.7 Diesel-1.9 Turbo-Diesel	88-95			MP0033	7787124	
1.8 i.e.-2.0 i.e. ABS	03/93-95			MP0029	7613514	
1.8-1.9 TDS-2.0	92->	MP0022	82433787			
1.8-16V	89-92			MP0033	7787124	
1.8-16V ABS	89-92			MP0029	7613514	
1.9 Diesel	92-95			MP0033	7787124	
1.9 Diesel	92-03/93			MP0033	7787124	
1.9 Turbo - Diesel ABS	88-95			MP0029	7613514	
TIPO 2 volumi						
1.0 - 1.6 Multijet	20->	MP0261	82466910			
1.3 D - 1.4 - 1.4 LPG - 1.6 D	16-20	MP0261	82466910			
TIPO Station wagon						
1.0 - 1.6 Multijet	20->	MP0261	82466910			
1.3 D - 1.4 - 1.4 LPG - 1.6 - 1.6 D	16-20	MP0261	82466910			
TIPO Tre volumi						
1.3 D - 1.4 - 1.6	15-20	MP0261	82466910			
1.4 LPG	16-20	MP0261	82466910			
ULYSSE						
Tutti i tipi/All types/Tous types	94-02			MP0178	1473543080	Back ABS 48 teeth
1.8-1.9 Td-2.0-2.0 T-2.1 Td-2.2 JTD	94->	MP0097	1311508080			

follow FIAT

MODELLO MODEL	ANNO YEAR	ANT CORAM FRONT CORAM	ANT ORIGINALE FRONT ORIGINAL	POST CORAM REAR CORAM	POST ORIGINALE REAR ORIGINAL	NOTE NOTES
UNO						
Tutti i tipi/All types/Tous types	83-95			MP0002	5948422	
Tutti i tipi/All types/Tous types	99->	MP0103	46447445			India
1.1 CS	88-91	MP0007	7591328			ch. 3403007 >
900 R/89 - 1.0 - 1.1 - 1.3 - 1370 - 1.5	89->	MP0003	4399777			
Diesel R/89 - Uno CS - Mondo - 900 R/89 - 1.0 R/89 - 1.1 R/89 - 1370 R/89- 1.5 R/89	89-95			MP0032	7603485	
FIRE		MP0102	7522385			
Turbo R/89	89-93			MP0015	7617175	
Turbo R/89	89-93			MP0104	7717348	ABS 44 teeth
Turbo R/89 - 1.1 CS - 1367 TD R/89 - 1697 - 1.7 CS DS. - 1930 A spirato Diesel R/89	88-95	MP0024	7634578			

FORD

MODELLO MODEL	ANNO YEAR	ANT CORAM FRONT CORAM	ANT ORIGINALE FRONT ORIGINAL	POST CORAM REAR CORAM	POST ORIGINALE REAR ORIGINAL	NOTE NOTES
C-MAX						
1.6 - 1.6 TDCi - 1.8 - 1.8 Flexifuel - 1.8 TDCi - 2.0 - 2.0 TDCi	07-10			MP0240	1230942	
1.6 - 1.6 TDCi - 1.8 - 1.8 Flexifuel - 1.8 TDCi - 2.0 - 2.0 TDCi	07-10	MP0248	1471854			
2.0 CNG	09-10			MP0240	1230942	
2.0 CNG	09-10	MP0248	1471854			
2.0 LPG	08-10			MP0240	1230942	
2.0 LPG	08-10	MP0248	1471854			
COUGAR						
Tutti i tipi/All types/Tous types	98-02			MP0110	5027621	
ABS	98-02			MP0107	5027622	
ESCORT						
1.1 - 1.3 - 1.4 - 1.6 - 1.8 - Station Wagon - Van	86-90	MP0056	1644842			
1.3 D Van - 1.3 16 v - 1.4 D Van - 1.4 16v	90-93	MP0057	6517014			
1.3 Navy - 1.4 D Van - 1.6 16 v - 1.8 D/TD - 1.8 16V - RS 2000	90-93	MP0058	6517013			
FIESTA						
Tutti i tipi/All types/Tous types	01/89-01/94	MP0057	6517014			
Tutti i tipi/All types/Tous types	01/94-08/96	MP0058	6517013			
96	08/95->	MP0058	6517013			
I/II serie - III/IV serie	94-01			MP0110	5027621	
II serie	->89	MP0056	1644842			
III/IV serie ABS	96-01			MP0107	5027622	

follow FORD

MODELLO MODEL	ANNO YEAR	ANT CORAM FRONT CORAM	ANT ORIGINALE FRONT ORIGINAL	POST CORAM REAR CORAM	POST ORIGINALE REAR ORIGINAL	NOTE NOTES
FIESTA VI						
1.0 Sport	14->	MP0245	1516504			
1.25 - 1.4 - 1.6 TDCi - 1.6 Ti	08->	MP0245	1516504			
1.4 LPG - 1.4 TDCi	09->	MP0245	1516504			
1.6 ST200	16->	MP0245	1516504			
FIESTA VI Van						
1.25 - 1.4 TDCi - 1.6 TDCi	09->	MP0245	1516504			
FOCUS						
1.4-1.6-1.8-2.0		MP0058	6517013			
FOCUS C-MAX						
1.6 - 1.6 TDCi - 1.8 - 2.0 TDCi	03-07			MP0240	1230942	
1.6 - 1.6 TDCi - 1.8 - 2.0 TDCi	03-07	MP0248	1471854			
1.6 Ti - 2.0	04-07			MP0240	1230942	
1.6 Ti - 2.0	04-07	MP0248	1471854			
1.8 Flexifuel	06-07			MP0240	1230942	
1.8 Flexifuel	06-07	MP0248	1471854			
1.8 TDCi	05-07			MP0240	1230942	
1.8 TDCi	05-07	MP0248	1471854			
FOCUS II						
1.4 - 1.6 - 1.6 TDCi - 1.6 Ti - 2.0 - 2.0 TDCi	04-12			MP0240	1230942	
1.4 - 1.6 - 1.6 TDCi - 1.6 Ti - 2.0 - 2.0 TDCi	04-12	MP0248	1471854			
1.6 LPG - 2.0 CNG	09-11			MP0240	1230942	
1.6 LPG - 2.0 CNG	09-11	MP0248	1471854			
1.8 - 1.8 Flexifuel	06-12			MP0240	1230942	
1.8 - 1.8 Flexifuel	06-12	MP0248	1471854			
1.8 TDCi - 2.5 ST	05-12			MP0240	1230942	
1.8 TDCi - 2.5 ST	05-12	MP0248	1471854			
2.0 LPG	08-11			MP0240	1230942	
2.0 LPG	08-11	MP0248	1471854			
FOCUS II Cabriolet						
1.6 - 2.0 - 2.0 TDCi	06-10			MP0240	1230942	
1.6 - 2.0 - 2.0 TDCi	06-10	MP0248	1471854			

follow FORD

MODELLO MODEL	ANNO YEAR	ANT CORAM FRONT CORAM	ANT ORIGINALE FRONT ORIGINAL	POST CORAM REAR CORAM	POST ORIGINALE REAR ORIGINAL	NOTE NOTES
FOCUS II Tre volumi						
1.4 - 1.6 - 1.6 TDCi - 1.6 Ti - 1.8 TDCi - 2.0 TDCi	05-12			MP0240	1230942	
1.4 - 1.6 - 1.6 TDCi - 1.6 Ti - 1.8 TDCi - 2.0 TDCi	05-12	MP0248	1471854			
1.8	06-12			MP0240	1230942	
1.8	06-12	MP0248	1471854			
1.8 Flexifuel	06-11			MP0240	1230942	
1.8 Flexifuel	06-11	MP0248	1471854			
2.0	05-11			MP0240	1230942	
2.0	05-11	MP0248	1471854			
FOCUS II Turnier						
1.4 - 1.6 TDCi - 1.6 Ti - 1.8 TDCi - 2.0 - 2.0 TDCi	04-12			MP0240	1230942	
1.4 - 1.6 TDCi - 1.6 Ti - 1.8 TDCi - 2.0 - 2.0 TDCi	04-12	MP0248	1471854			
1.6	04-11			MP0240	1230942	
1.6	04-11	MP0248	1471854			
1.6 LPG	09-12			MP0240	1230942	
1.6 LPG	09-12	MP0248	1471854			
1.8 - 1.8 Flexifuel	06-12			MP0240	1230942	
1.8 - 1.8 Flexifuel	06-12	MP0248	1471854			
2.0 LPG	08-11			MP0240	1230942	
2.0 LPG	08-11	MP0248	1471854			
FUSION						
1.4 16 v - 1.4 TDCi - 1.6 16 v		MP0058	6517013			
GALAXY						
1.9-2.0-2.3-2.8		MP0108	7201007			
KA						
1299 cc	09/96->	MP0058	6517013			
MONDEO						
1.8 - 1.8 SCi - 2.0 - 2.0 TDCi - 2.5 V6	00->	MP0184	4103347			
1.8 16v - TD - 2.0 16v - 2.5 V6 24v	->00	MP0109	7346525			
I/II Berlina	93-00			MP0110	5027621	
I/II Berlina	93-00			MP0107	5027622	ABS

follow FORD

MODELLO MODEL	ANNO YEAR	ANT CORAM FRONT CORAM	ANT ORIGINALE FRONT ORIGINAL	POST CORAM REAR CORAM	POST ORIGINALE REAR ORIGINAL	NOTE NOTES
ORION						
1.3 - 1.4 - 1.6 - 1.6 D - 1.8 D	86-90	MP0056	1644842			
1.3 16v - 1.4 16 v	90-93	MP0057	6517014			
1.6 16 v - 1.8 D - 1.8 TD - 1.8 16v	90-93	MP0058	6517013			
PUMA						
1.4 16 v -1.7 16 v		MP0058	6517013			
TRANSIT Autobus						
2.0 DI - 2.3 16V - 2.4 DI - 2.4 DI RWD	00-06	MP0250	MP0250			
2.0 TDCi	02-06	MP0250	MP0250			
2.4 TDCi	04-06	MP0250	MP0250			
2.4 TDE	01-06	MP0250	MP0250			
TRANSIT Furgonato						
2.0 DI - 2.4 DI - 2.4 DI RWD	00-06	MP0250	MP0250			
2.0 TDCi	02-06	MP0250	MP0250			
2.4 TD	00-03	MP0250	MP0250			
2.4 TDCi	04-06	MP0250	MP0250			
2.4 TDE	01-06	MP0250	MP0250			
TRANSIT Pianale piatto						
2.0 DI - 2.4 DI	00-06	MP0250	MP0250			
2.0 TDCi	02-06	MP0250	MP0250			
2.4 TDCi	04-06	MP0250	MP0250			
2.4 TDE	01-06	MP0250	MP0250			

HIUNDAI

MODELLO MODEL	ANNO YEAR	ANT CORAM FRONT CORAM	ANT ORIGINALE FRONT ORIGINAL	POST CORAM REAR CORAM	POST ORIGINALE REAR ORIGINAL	NOTE NOTES
SANTA FE'						
2.0 CRDi - 2.0 CRDi 4x4 - 2.4 16V 4x4 - 2.7 V6 4x4	01-06	MP0231	51750-3A003			

HONDA

MODELLO MODEL	ANNO YEAR	ANT CORAM FRONT CORAM	ANT ORIGINALE FRONT ORIGINAL	POST CORAM REAR CORAM	POST ORIGINALE REAR ORIGINAL	NOTE NOTES
ACCORD						
Aerodeck 2.0	94->	MP0114	44600-S04-980			
Berlina 1.8-2.0	94-09/98	MP0114	44600-S04-980			
Coupé 2.0	94-98	MP0114	44600-S04-980			
CIVIC						
1.3-1.5-1.6 Esi	10/92-09/95	MP0115	44600-S04-980			
1.4	10/95->	MP0115	44600-S04-980			
1.4-1.4 S-1.5 LS-1.6 ES-2.0 Td	04/97->	MP0117	44600-ST3-E00			
1.4-1.5-1.6 LS-1.6 SR	->03/97	MP0117	44600-ST3-E00			
1.5-1.6	10/95->	MP0116	44600-S04-A00			
1.6 Vti	10/92-09/95	MP0116	44600-S04-A00			
Aerodeck 1.4-1.5-1.6-2.0		MP0117	44600-ST3-E00			
Coupè 1.6	94-96	MP0116	44600-S04-A00			† 100000<
LOGO						
1.3		MP0115	44600-S04-980			

HYUNDAI

MODELLO MODEL	ANNO YEAR	ANT CORAM FRONT CORAM	ANT ORIGINALE FRONT ORIGINAL	POST CORAM REAR CORAM	POST ORIGINALE REAR ORIGINAL	NOTE NOTES
ACCENT						
1.3-1.5	04/97-08/99	MP0111	5175024500			
1.6 - 1.6 Air/Comfort/FX - 2.0	->99	MP0112	5175029000			
1.6 - 1.6 Air/FX - 2.0 FX	09/99 - 02/02	MP0113	5175029100			
ACCENT I						
1.3	94-00	MP0221	51750-25000	MP0222	25710-22100	MP0222/SA: VERSION WITHOUT ABS
1.3 i 12V - 1.5 i 12V	94-00			MP0222	52710-22100	MP0222/SA: VERSION WITHOUT ABS
1.5 i 16V	95-00			MP0222	52710-22100	MP0222/SA: VERSION WITHOUT ABS
ACCENT II						
1.3 - 1.5	00-05	MP0221	51750-25000			
1.5 CRDi - 1.6	02-05	MP0221	51750-25000			
ACCENT III						
1.4 GL - 1.5 CRDi - 1.6 GLS	05->	MP0221	51750-25000			
1.5 CRDi GLS	05->			MP0223	52750-1C100	MP0223/SA: VERSION WITHOUT ABS

follow HYUNDAI

MODELLO MODEL	ANNO YEAR	ANT CORAM FRONT CORAM	ANT ORIGINALE FRONT ORIGINAL	POST CORAM REAR CORAM	POST ORIGINALE REAR ORIGINAL	NOTE NOTES
ACCENT Tre volumi						
1.3 - 1.3 i 12V - 1.5 i 12V	94-00			MP0222	52710-22100	MP0222/SA: VERSION WITHOUT ABS
1.3 - 1.5	00-05	MP0221	51750-25000			
1.4 GL - 1.5 CRDi GLS - 1.6 GLS	05->	MP0221	51750-25000	MP0223	52750-1C100	MP0223/SA: VERSION WITHOUT ABS
1.5 CRDi - 1.6	02-05	MP0221	51750-25000			
1.5 i 16V	95-00			MP0222	52710-22100	MP0222/SA: VERSION WITHOUT ABS
ATOS						
1.0 i	01->	MP0221	51750-25000			
1.1	04->	MP0221	51750-25000			
ATOS PRIME						
1.0 i	99->	MP0221	51750-25000			
1.1	03->	MP0221	51750-25000			
COUPE						
1.6 i 16V - 2.0 16V	96-02	MP0221	51750-25000			
ELANTRA						
1.6 - 1.8 - 2.0	00-06			MP0227	52710-2D100	
1.6 - 1.8 - 2.0	00-06			MP0228	52710-2D025	
2.0 CRDi	01-06			MP0227	52710-2D100	
ELANTRA Tre volumi						
1.6 - 1.8 - 2.0	00-06			MP0227	52710-2D100	
1.6 - 1.8 - 2.0	00-06			MP0228	52710-2D025	
2.0 CRDi	01-06			MP0227	52710-2D100	
GETZ						
1.1	02-09	MP0221	51750-25000	MP0223	52750-1C100	MP0223/SA: VERSION WITHOUT ABS
1.3	03-05	MP0221	51750-25000	MP0223	52750-1C100	MP0223/SA: VERSION WITHOUT ABS
1.3 i	02-04	MP0221	51750-25000	MP0223	52750-1C100	MP0223/SA: VERSION WITHOUT ABS
1.4 i - 1.5 CRDi GLS	05-09	MP0221	51750-25000	MP0223	52750-1C100	MP0223/SA: VERSION WITHOUT ABS
1.5 CRDi	03-09	MP0221	51750-25000	MP0223	52750-1C100	MP0223/SA: VERSION WITHOUT ABS
1.6	02-05	MP0221	51750-25000			
1.6	02-09			MP0223	52750-1C100	MP0223/SA: VERSION WITHOUT ABS

follow HYUNDAI

MODELLO MODEL	ANNO YEAR	ANT CORAM FRONT CORAM	ANT ORIGINALE FRONT ORIGINAL	POST CORAM REAR CORAM	POST ORIGINALE REAR ORIGINAL	NOTE NOTES
i10						
1.1 - 1.1 CRDi - 1.2	08->	MP0221	51750-25000	MP0223	52750-1C100	MP0223/SA: VERSION WITHOUT ABS
i20						
1.2 - 1.4 - 1.4 CRDi - 1.6	08->	MP0221	51750-25000			
LANTRA						
1.5 GL	95->	MP0113	5175029100			
1.6 GL/GLS -1.8 GLS/HS - 1.9 D GL	95-98	MP0112	5175029000			
1.6 GLS Confort - 1.9 D GL/GLS	98->	MP0113	5175029100			
LANTRA II						
1.5 12V	96-00	MP0221	51750-25000			
1.6 16V - 1.8 16V	95-00	MP0221	51750-25000			
1.9 D	98-00	MP0221	51750-25000			
2.0 16V	96-00	MP0221	51750-25000			
LANTRA II Wagon						
1.5 12V	97-00	MP0221	51750-25000			
1.6 16V - 1.8 16V	96-00	MP0221	51750-25000			
1.9 D	98-00	MP0221	51750-25000			
2.0 16V	96-00	MP0221	51750-25000			
MATRIX						
1.5 CRDi - 1.6 - 1.8	01-10			MP0227	52710-2D100	
1.5 CRDi VGT	05-10			MP0227	52710-2D100	
TIBURON						
1.6 FX/FX Max - 2.0 FX/FX Max	->99	MP0112	5175029000			
TRAJET						
2.0	00-08	MP0231	51750-3A003			
2.0 CRDi	01-08	MP0231	51750-3A003			

follow HYUNDAI

MODELLO MODEL	ANNO YEAR	ANT CORAM FRONT CORAM	ANT ORIGINALE FRONT ORIGINAL	POST CORAM REAR CORAM	POST ORIGINALE REAR ORIGINAL	NOTE NOTES
TUCSON						
2.0	04-10	MP0231	51750-3A003	MP0220	52710-2E500	
2.0 4 ruote motrici - 2.0 CRDi - 2.7 4 ruote motrici	04-10	MP0231	51750-3A003			
2.0 CRDi - 2.0 CRDi Trazione integrale - 2.0 Trazione integrale - 2.7 Trazione integrale	04-10			MP0220	52710-2E500	
2.0 CRDi 4 route motrici	09-10	MP0231	51750-3A003			

KIA

MODELLO MODEL	ANNO YEAR	ANT CORAM FRONT CORAM	ANT ORIGINALE FRONT ORIGINAL	POST CORAM REAR CORAM	POST ORIGINALE REAR ORIGINAL	NOTE NOTES
PICANTO						
1.0 - 1.1 CRDi	05->	MP0221	51750-25001	MP0223	52750-1C100	MP0223/SA: VERSION WITHOUT ABS
1.1	04->	MP0221	51750-25001	MP0223	52750-1C100	MP0223/SA: VERSION WITHOUT ABS
RIO						
1.3	02-05			MP0223	52750-1C100	MP0223/SA: VERSION WITHOUT ABS
RIO II						
1.4 16V - 1.5 CRDi - 1.6 CVVT	05->	MP0221	51750-25001	MP0223	52750-1C100	MP0223/SA: VERSION WITHOUT ABS
RIO II Tre volumi						
1.4 16V - 1.5 CRDi - 1.6 16V	05->	MP0221	51750-25001	MP0223	52750-1C100	MP0223/SA: VERSION WITHOUT ABS
SPORTAGE						
2.0 16V - 2.0 CRDi 4WD	04->	MP0231	51750-3A003			
2.0 16V 4WD - 2.0 CRDi 4WD - 2.0 i 16V	04->			MP0220	52710-2E500	

LADA

MODELLO MODEL	ANNO YEAR	ANT CORAM FRONT CORAM	ANT ORIGINALE FRONT ORIGINAL	POST CORAM REAR CORAM	POST ORIGINALE REAR ORIGINAL	NOTE NOTES
110						
1499 cc.		MP0061	21083103012			
111						
1499 cc.		MP0061	21083103012			

follow LADA

MODELLO MODEL	ANNO YEAR	ANT CORAM FRONT CORAM	ANT ORIGINALE FRONT ORIGINAL	POST CORAM REAR CORAM	POST ORIGINALE REAR ORIGINAL	NOTE NOTES
NIVA						
Tutti i tipi/All types/Tous types		MP0060	21213103012			
SAMARA						
Tutti i tipi/All types/Tous types		MP0061	21083103012			

LANCIA

MODELLO MODEL	ANNO YEAR	ANT CORAM FRONT CORAM	ANT ORIGINALE FRONT ORIGINAL	POST CORAM REAR CORAM	POST ORIGINALE REAR ORIGINAL	NOTE NOTES
DEDRA						
1.6 16V	97-98			MP0027	46453887	
1.6 16V ABS	97-98			MP0029	60811481	
1.6 i.e. 8V	89-97			MP0027	46453887	
1.6 i.e. 8V ABS	89-01/93			MP0029	60811481	
1.6-1.6 SW	10/94-12/97	MP0021	7608131			
1.8 16V	96-98			MP0027	46453887	
1.8 16V ABS	96-98			MP0029	60811481	
1.8 i.e. 8V	89-96			MP0027	46453887	
1.8 i.e. 8V ABS	89-01/93			MP0027	46453887	
1.8 i.e. 8V ABS	02/93-95			MP0029	60811481	
1.8-1.8 SW-1.9 Td-1.9 Td SW-2.0-2.0 SW	94-01	MP0022	82433787			
1.8-1.9 TDS-2.0	-09/94	MP0022	82433787			
1.9 Td	89-98			MP0027	46453887	
1.9 Td	89-98			MP0029	60811481	
2.0 16 V	94-01			MP0029	60811481	
2.0 16 V S.W. '98	94-01			MP0027	46453887	
2.0 16 V S.W. LS 4X4	94-01			MP0022	82433787	
2.0 16 V S.W. LS/LX 4X2	94-01			MP0029	60811481	
2.0 i.e.	89-97			MP0027	46453887	
2.0 i.e. ABS	89-97			MP0029	60811481	
2.0 Turbo	91-92			MP0027	46453887	
2.0 Turbo ABS	91-92			MP0029	60811481	

follow LANCIA

MODELLO MODEL	ANNO YEAR	ANT CORAM FRONT CORAM	ANT ORIGINALE FRONT ORIGINAL	POST CORAM REAR CORAM	POST ORIGINALE REAR ORIGINAL	NOTE NOTES
DELTA						
1.1 CARB R/86 - 1.3 CARB R/86 - 1.5 CARB R/86	86-92	MP0007	4390949	MP0032	7603485	
1.3-1.5	86-94	MP0007	4390949	MP0002	7599461	
1.3-1.5	86-94	MP0007	4390949			
1.3-1.5	->85			MP0002	7599461	Ch. 235562< - Ch. 235563>
1.6	05/93-10/97	MP0021	7608131			
1.6	05/93-10/97			MP0002	7599461	
1.6	11/97->	MP0021	7608131			
1.6 GT	->85	MP0008	5955456			Ch. 235563>
1.6 GT	->85			MP0015	7617175	Ch. 235563>
1.6 GT -1.6 HF Turbo-1.9 DS	86-94			MP0015	7617175	
1.6 GT-1.9 TDS-DS	86-94	MP0008	5955456			
1.6 R/86 - 1930 TB/DS R/86	86-92	MP0008	5955456			Ch. 444357<
1.6 R/86 - 1930 TB/DS R/86	86-92	MP0025	7641450			Ch. 444357>
1.6 R/86 - 1930 TB/DS R/86	86-92			MP0015	7617175	
1.6-1.8-1.9 TD	11/97->			MP0027	46453887	
1.6-1.8-1.9 TD-2.0 HF ABS	11/97->			MP0029	60811481	
1.6-1.8-1.9 Td-2.0-2.0 T ABS	05/93-10/97			MP0029	60811481	
1.8-1.9 Td	11/97->	MP0022	7667265			
1.8-1.9 Td-2.0	05/93-10/97			MP0027	46453887	
1.8-1.9 Td-2.0	05/93-10/97	MP0022	7667265			
1.9 TDS	86-94			MP0026	82438592	
1930 TB/DS R/86	86-92			MP0026	82438592	
2.0 16V HF Evo Integrale	93-94	MP0261	82466910			
Evoluzione	91-94	MP0086	60811032	MP0086	60811032	
HF 1.6 T	->85	MP0008	5955456			
HF 1.6 T	->85			MP0015	7617175	
Nuova Delta 2.0 16v TB		MP0079	60545087			
Nuova Delta TD/DS	94-99	MP0022	7667265	MP0027	46453887	
Nuova Delta TD/DS ABS	94-99			MP0029	60811481	44 teeth
R/86		MP0024	7643294			
KAPPA						
Coupè - Diesel - 2.0 - 2.4 - 3.0 Belrina - 3.0 Station Wagon	94-01	MP0167	60815160			
LYBRA						
1.6-1.6 SW-1.8-1.8 SW		MP0022	7667265			
1.9 JTD-1.9 JTD SW-2.0-2.0 SW-2.4 JTD-2.4 JTD SW		MP0079	60809805			
2.4 20 v - 2.4 JTD	99->			MP0081	60563372	
Berlina- Station Wagon	99->			MP0165	46519901	Back ABS 48 poles

follow LANCIA

MODELLO MODEL	ANNO YEAR	ANT CORAM FRONT CORAM	ANT ORIGINALE FRONT ORIGINAL	POST CORAM REAR CORAM	POST ORIGINALE REAR ORIGINAL	NOTE NOTES
PHEDRA						
2.0 16 v - 2.0 JTD 16 v	02->	MP0097	1311508080			
PRISMA						
1.3-1.5	86-94	MP0007	4390949			
1.3-1.5-1.6	->85	MP0007	4390949			
1.3-1.5-1.6-D	->85			MP0002	7599461	
1.3-1.5-D	86->			MP0002	7599461	
1.6	86->			MP0015	7617175	
1.6 Cam. Aut.	->85	MP0008	5955456			
Diesel				MP0032	7603485	
Diesel- Td	->86	MP0008	5955456			
Diesel- Td	86->	MP0025	7641450			
Td	86->			MP0026	82438592	
THEMA						
2.0 16V ABS 44 denti	92-94			MP0031	82462175	Ch. 300637>
2.0 16V Turbo ABS 44 denti	92-94			MP0031	82462175	Ch. 303314>
2.0 16V Turbo ABS 90 denti	89-92			MP0030	82469083	Ch. 303313<
2.0 16V-2.0 16V T	89-92			MP0028	82403117	
2.0 16V-2.0 16V T ABS 90 denti	89-92			MP0030	82469083	Ch. 300636<
2.0 8V ABS 44 denti	92->			MP0031	82462175	Ch. 303504>
2.0 8V ABS 90 denti	85-92			MP0030	82469083	
2.0 8V Turbo	85-88			MP0028	82403117	
2.0 8V-2.5 Td-2.85-V6	85-92			MP0028	82403117	
2.0-2.0 T-2.5Td-2.5 SW	92->	MP0118	82463292			
2.0-2.0 T-2.8 V6	->91	MP0022	82433787			
2.5 Td ABS 90 denti	85-08/92			MP0030	82469083	
2.5 Td ABS 44 denti	09/92-93			MP0031	82462175	
2.5 TDS-2.5 TDS SW	88-91	MP0022	82433787			
2.85-V6 ABS 90 denti	85-92			MP0030	82469083	
3.0-V6 ABS 44 denti	93-95			MP0031	82462175	
8.32 R/88	88-92			MP0085	60801644	
I.E. 8v-16v FL.92 - Turbo DS FL.92 - 3.0 V6 FL.92	92-94	MP0101	82463292			
THESIS						
2.0 TB - 2.4 - 2.4 JTD - 3.0 - 3.2	01->	MP0167	60815160			
2.0 Turbo - 2.4 - 2.4 JTD - 3.0 V6	02-09	MP0244	51813925			
2.4 D Multijet	06-09	MP0244	51813925			
3.2 V6	03-09	MP0244	51813925			

follow LANCIA

MODELLO MODEL	ANNO YEAR	ANT CORAM FRONT CORAM	ANT ORIGINALE FRONT ORIGINAL	POST CORAM REAR CORAM	POST ORIGINALE REAR ORIGINAL	NOTE NOTES
Y						
Tutti i tipi/All types/Tous types	95-00	MP0021	7608131			
Tutti i tipi/All types/Tous types	95->			MP0165	46512973	Back ABS 48 poles
Tutti i tipi/All types/Tous types	95-00			MP0027	46453887	
1.3 JTD 16 v		MP0022	82433787			
ABS	95-00			MP0080	7769902	
Y10						
FL. 89 - R92	89-95	MP0006	4400918			
FL. 89 - R92	89-95			MP0032	7603485	
FL. 89 4X4 - R92 4X4	89-95			MP0018	5963034	
Z						
Tutti i tipi/All types/Tous types	94-02	MP0097	1311508080	MP0178	1473543080	Back ABS 48 teeth

MERCEDES

MODELLO MODEL	ANNO YEAR	ANT CORAM FRONT CORAM	ANT ORIGINALE FRONT ORIGINAL	POST CORAM REAR CORAM	POST ORIGINALE REAR ORIGINAL	NOTE NOTES
CLASSE A						
140 - 160 - 160 CDI- 170 CDI -190 - 210 (Avantgarde /Classic/Elegance/Evolution)		MP0185	1683370345			
140 - 160 - 160 CDI - 170 CDI - 190 (Avantgarde /Classic/Elegance)				MP0186	1683500035	
140 - 160 - 160 CDI - 170 CDI (Avantgarde /Classic/Elegance)				MP0187	1683500435	ABS 48 teeth
210 Evolution				MP0187	1683500435	ABS 48 teeth
CLASSE A LUNGA						
140- 160 - 170 CDI - 190 - 210 (Avantgarde /Classic/Elegance/Evolution)		MP0185	1683370345	MP0187	1683500435	ABS 48 teeth
CLASSE C						
180-200-220-250	->04/00	MP0188	2103300325			ABS 48 teeth
180-200-220-250	->04/00			MP0119	2013571708	
200 CDI - 200 Kompressor -220 CDI Elegance	05/00->			MP0189	2033570008	
CLASSE C Sportcoupè						
180 Evo - 200 Kompressor Evo - 220 CDI - 230 Kompressor Evo				MP0189	2033570008	

follow MERCEDES

MODELLO MODEL	ANNO YEAR	ANT CORAM FRONT CORAM	ANT ORIGINALE FRONT ORIGINAL	POST CORAM REAR CORAM	POST ORIGINALE REAR ORIGINAL	NOTE NOTES
CLASSE E						
200 - 220 - 220 CDI - 230 - 280 - 300D - 320 200 -220-230-250D -280-300D-320 -420 S.W. 220 - 240 - 270 CDI - 320 - 500	95-02 04/95->\ 02->	MP0188	2103300325	MP0120 MP0190	1243574608 2113570308	ABS 48 teeth
CLK						
200 El. Coupè - 200 Kompressor - 230 Kompressor - 320 El. Cabr. - 430 Avant. Cabr.	99-02	MP0188	2103300325	MP0119	2013571708	Front ABS 48 teeth
SLK						
200 Kompressor Evo - 230 Kompressor Evo - 320	00->	MP0188	2103300325	MP0119	2013571708	Front ABS 48 teeth
VANEO						
1.6 - 1.7 CDI - 1. 9 (Ambiente/Family/Trend)		MP0185	1683370345			

MINI

MODELLO MODEL	ANNO YEAR	ANT CORAM FRONT CORAM	ANT ORIGINALE FRONT ORIGINAL	POST CORAM REAR CORAM	POST ORIGINALE REAR ORIGINAL	NOTE NOTES
MINI						
Cooper - Cooper S - One - One Clima - One De Luxe - One De Luxe C.L.	10/01->	MP0192	31226756889	MP0191	33416756830	ABS 48 poles

NISSAN

MODELLO MODEL	ANNO YEAR	ANT CORAM FRONT CORAM	ANT ORIGINALE FRONT ORIGINAL	POST CORAM REAR CORAM	POST ORIGINALE REAR ORIGINAL	NOTE NOTES
ALMERA						
1.4-1.6-2.0 D 1.5 Luxury - 1.8 Luxury	->01/00 02/00-12/02	MP0121 MP0193	402020M010 402024M400			
JUKE						
1.5 dCi - 1.6 - 1.6 DIG-T - 1.6 DIG-T 4x4 1.6 DIG-T NISMO	10->\ 13-14	MP0236 MP0236	40202-1KA0A 40202-1KA0A			
MICRA						
1.0-1.3 1.0-1.3 1.0-1.3-1.5D Nuova Micra	92-12/95 01/96->\ 02/98-02 11/02->	MP0122 MP0123 MP0123 MP0194	402024F100 402024F105 402024F105 40204AX600			

follow NISSAN

MODELLO MODEL	ANNO YEAR	ANT CORAM FRONT CORAM	ANT ORIGINALE FRONT ORIGINAL	POST CORAM REAR CORAM	POST ORIGINALE REAR ORIGINAL	NOTE NOTES
PRIMERA						
1.6 SW-2.0 SW	01/98-06/99	MP0125	402022F000			
1.6-2.0	->05/96	MP0124	4020290J00			
1.6-2.0	06/96-06/99	MP0125	402022F000			
QUASHQAI						
1.5 dCi - 1.6 - 2.0 dCi	07-13			MP0249	43202-JG000	
1.5 dCi - 1.6 - 2.0 dCi - 2.0 dCi Trazione integrale	07-13	MP0236	40202-1KA0A			
QUASHQAI +2 I						
1.5 dCi - 1.6 - 2.0 dCi	07-13			MP0249	43202-JG000	
1.5 dCi - 1.6 - 2.0 dCi - 2.0 dCi Trazione integrale	07-13	MP0236	40202-1KA0A			
X-TRAIL						
1.6 dCi - 1.6 dCi ALL MODE 4x4	14->			MP0249	43202-JG000	
1.6 DIG-T	15->			MP0249	43202-JG000	
2.0 4x4	08-13	MP0236	40202-1KA0A			
2.0 dCi	07-13			MP0249	43202-JG000	
2.0 FWD - 2.0 dCi	07-13	MP0236	40202-1KA0A			

OPEL

MODELLO MODEL	ANNO YEAR	ANT CORAM FRONT CORAM	ANT ORIGINALE FRONT ORIGINAL	POST CORAM REAR CORAM	POST ORIGINALE REAR ORIGINAL	NOTE NOTES
AGILA						
1.0 - 1.2	04->	MP0195	4707270			
1.3 DT	04->	MP0196	4707271			
ASCONA C						
1.3 -1.6 SV/NZ/LZ	82-88	MP0065	326197			
1.6 D/DA/N/S/SH - 1.8 -2.0	82-88	MP0066	326184			
ASTRA						
Astra - Astra Classic	09/91-04/02			MP0129	1604004	

follow OPEL

MODELLO MODEL	ANNO YEAR	ANT CORAM FRONT CORAM	ANT ORIGINALE FRONT ORIGINAL	POST CORAM REAR CORAM	POST ORIGINALE REAR ORIGINAL	NOTE NOTES
ASTRA F						
1.4 NV/C - 1.4 NZ/X - 1.4 NZ/1.4 SE/C - 1.4 SE	92-98	MP0065	326197			Manual transmission
1.4 SE/C 1.4 SE Cabrio Ch. RB000001 ->	92-98	MP0065	326197			Close gearbox ratio
1.4 SE/C 1.4 SE Cabrio Ch. RB000001 ->	92-98	MP0126	326185			Wide gearbox ratio
1.4 SE/C 1.4 SE Cabrio Ch. -> RB000000	92-98	MP0126	326185			
1.4 SE/C 1.4 SE Ch. -> P5077914 Ch. NE299999	92-98	MP0065	326197			Automatic transmission
1.4 SE/C 1.4 SE Ch. -> S2999999 ->S5999999 ->S6999999 ->S8999999 ->S999999	92-98	MP0126	326185			Kenya
1.4 SE/C 1.4 SE Ch. ->R2000000 ->R3000000 ->R4000000 ->R5000000 ->R6000000 ->R8000000	92-98	MP0126	326185			Automatic transmission
1.4 SE/C 1.4 SE Ch. R2000001-> R3000001-> R4000001-> R5000001-> R6000001-> R8000001->	92-98	MP0065	326197			Automatic transmission
1.4 SE/C 1.4 SE/X 1.4XE Ch.T2500001 -> T5000001-> T6000001-> T8000001-> TP000001->	92-98	MP0128	326196			
1.6 LZ2/1.6 NZ2 Ch. -> S2999999 ->S5999999 ->S6999999 ->S8999999 ->S999999	92-98	MP0066	326184			
1.6 LZ2/1.6 NZ2 Ch.T2500001 -> T5000001-> T6000001-> T8000001-> TP000001->	92-98	MP0127	326194			
1.7 D/1.7 DR Ch. -> P2733477 ->P5272311 ->P8202125	92-98	MP0066	326184			
1.7 D/1.7 DR/X - 1.7 DTL Ch. P2733478-> ->S2999999 P5273312-> ->S5999999 P8202126-> ->S8999999	92-98	MP0126	326185			
1.7 TD Ch. -> S2999999 ->S5999999 ->S6999999 ->S8999999 ->S999999	92-98	MP0066	326184			
1.7 TD Ch. -> T2500001 -> T5000001-> T6000001-> T8000001-> TP000001->	92-98	MP0127	326194			
1.8 SE/C 1.8 NZ/C 1.8 XE/C1.8 XEL Ch. -> S2999999 ->S5999999 ->S6999999 ->S8999999 ->S999999	92-98	MP0066	326184			
1.8 SE/C 1.8 NZ/C 1.8 XE/C1.8 XEL Ch. -> T2500001 -> T5000001-> T6000001-> T8000001-> TP000001->	92-98	MP0127	326194			
C 1.6 NZ/X - 1.6 SZ/C - 1.6 SE Ch. -> P5077914 Ch. NE299999	92-98	MP0065	326197			Automatic transmission
C 1.6 NZ/X -1.6 SZ/C-1.6 SE Cabrio Ch. RB000001 ->	92-98	MP0065	326197			Close gearbox ratio
C 1.6 NZ/X -1.6 SZ/C-1.6 SE Cabrio Ch. RB000001 ->	92-98	MP0126	326185			Wide gearbox ratio
C 1.6 NZ/X -1.6 SZ/C-1.6 SE Cabrio Ch. -> RB000000	92-98	MP0126	326185			
C 1.6 NZ/X -1.6 SZ/C-1.6 SE Ch.>R2000000 ->R3000000 ->R4000000 ->R5000000 ->R6000000 ->R8000000	92-98	MP0126	326185			Automatic transmission
C 1.6 NZ/X-1.6 SZ/X - 1.6 SZR	92-98	MP0065	326197			Manual transmission
C 1.6 NZ/X-1.6 SZ/X - 1.6 SZR Ch->R2000001 - R3000001 -> R4000001-> R5000001-> R6000001-> R8000001->	92-98	MP0065	326197			Automatic transmission
C 1.6 SE	92-98	MP0126	326185			Taiwan
C 1.6 SE/X-1.6 XEL	92-98	MP0065	326197			Manual transmission
C 1.6 SE/X-1.6 XEL Ch->R2000001 - R3000001 -> R4000001-> R5000001-> R6000001-> R8000001->	92-98	MP0065	326197			Automatic transmission
C 1.8 SEL Ch-> T2999999 ->T5999999 ->T6999999 ->T8999999	92-98	MP0066	326184			Taiwan
C 2.0 NE/C 2.0 XE/X 2.0XEV Ch. -> S2999999 ->S5999999 ->S6999999 ->S8999999 ->S999999	92-98	MP0066	326184			
C 2.0 NE/C 2.0 XE/X 2.0XEV Ch.T2500001 -> T5000001-> T6000001-> T8000001-> TP000001->	92-98	MP0127	326194			
X 1.4 XE	92-98	MP0065	326197			
X 1.6 XEL Ch.T2500001 -> T5000001-> T6000001-> T8000001-> TP000001->	92-98	MP0128	326196			
X 1.6 XEL Ch. -> S2999999 ->S5999999 ->S6999999 ->S8999999 ->S999999	92-98	MP0065	326197			
X 1.6 XEL Ch. -> S2999999 ->S5999999 ->S6999999 ->S8999999 ->S999999	92-98	MP0126	326185			Thailandia
X 1.7 DTL Ch. -> T2500001 -> T5000001-> T6000001-> T8000001-> TP000001->	92-98	MP0128	326196			
ASTRA G						
1.2 16v - 1.4 16v - 1.6 - 1.6 16v - 1.7 DTI 16 v - 1.7 TD - 1.8 16 v - 2.0 DI	98-02			MP0129	1604004	
1.8 16 v - 2.0 16 v - 2.0 DTI 16 v - 2.2 DTI - 2.2 16 v	98-02			MP0199	1604005	
Astra	98-02	MP0197	1603208			4 holes
Astra	98-02	MP0198	1603210			5 holes

follow OPEL

MODELLO MODEL	ANNO YEAR	ANT CORAM FRONT CORAM	ANT ORIGINALE FRONT ORIGINAL	POST CORAM REAR CORAM	POST ORIGINALE REAR ORIGINAL	NOTE NOTES
ASTRA G 2 volumi						
1.2 16V - 1.4 16V - 1.6 - 1.6 16V - 1.8 16V - 2.0 16V - 2.0 DI	98-05	MP0252	13123486			
1.2 16V - 1.4 16V - 1.6 - 1.6 16V - 1.8 16V - 2.0 16V - 2.0 DI	98-05	MP0253	09117622			
1.4	07-09	MP0253	09117622			
1.7 CDTI	03-05	MP0252	13123486			
1.7 CDTI	03-05	MP0253	09117622			
1.7 DTI 16V	00-05	MP0252	13123486			
1.7 DTI 16V - 2.2 16V	00-05	MP0253	09117622			
1.7 TD	98-00	MP0252	13123486			
1.7 TD	98-00	MP0253	09117622			
1.8 16V - 2.0 16V - 2.0 DI	98-05			MP0251	1604002	
2.0 16V OPC	99-02	MP0252	13123486			
2.0 16V OPC	99-02	MP0253	09117622			
2.0 DTI	99-05			MP0251	1604002	
2.0 DTI 16V	99-05	MP0252	13123486			
2.0 DTI 16V	99-05	MP0253	09117622			
2.0 OPC - 2.2 DTI	98-05			MP0251	1604002	
2.0 OPC - 2.2 DTI	02-05	MP0252	13123486			
2.0 OPC - 2.2 DTI	02-05	MP0253	09117622			
ASTRA G Cabriolet						
1.6	03-05	MP0252	13123486			
1.6	03-05	MP0253	09117622			
1.6 16V - 1.8 16V - 2.2 16V	01-05	MP0252	13123486			
1.6 16V - 1.8 16V - 2.2 16V	01-05	MP0253	09117622			
1.8 16V	01-05			MP0251	1604002	
2.0 16V Turbo - 2.0 OPC - 2.2 DTI	02-05			MP0251	1604002	
2.0 16V Turbo - 2.0 OPC - 2.2 DTI	02-05	MP0252	13123486			
2.0 16V Turbo - 2.0 OPC - 2.2 DTI	02-05	MP0253	09117622			
ASTRA G Cassone						
1.6 - 1.7 TD - 2.0 DI	99-05	MP0252	13123486			
1.6 - 1.7 TD - 2.0 DI	99-05	MP0253	09117622			
1.7 DTI 16V	00-05	MP0252	13123486			
ASTRA G CLASSIC Caravan						
1.4	07-09	MP0252	13123486			
1.4	07-09	MP0253	09117622			

follow OPEL

MODELLO MODEL	ANNO YEAR	ANT CORAM FRONT CORAM	ANT ORIGINALE FRONT ORIGINAL	POST CORAM REAR CORAM	POST ORIGINALE REAR ORIGINAL	NOTE NOTES
ASTRA G Coupé						
1.6 16V - 1.8 16V - 2.0 16V Turbo	00-05	MP0252	13123486			
1.6 16V - 1.8 16V - 2.0 16V Turbo - 2.2 16V	00-05	MP0253	09117622			
1.8 16V - 2.0 16V Turbo	00-05			MP0251	1604002	
2.2 DTI	02-05			MP0251	1604002	
2.2 DTI	02-05	MP0252	13123486			
2.2 DTI	02-05	MP0253	09117622			
ASTRA G Station wagon						
1.2 16V - 1.4 16V - 1.6 - 1.6 16V - 1.8 16V - 2.0 16V - 2.0 DI	98-04	MP0252	13123486			
1.2 16V - 1.4 16V - 1.6 - 1.6 16V - 1.8 16V - 2.0 16V - 2.0 DI	98-04	MP0253	09117622			
1.6 CNG - 1.7 CDTI	03-04	MP0252	13123486			
1.6 CNG - 1.7 CDTI	03-04	MP0253	09117622			
1.7 DTI 16V	00-04	MP0252	13123486			
1.7 DTI 16V	00-04	MP0253	09117622			
1.7 TD	98-00	MP0252	13123486			
1.7 TD	98-00	MP0253	09117622			
1.8 16V - 2.0 16V - 2.0 DI	98-04			MP0251	1604002	
2.0 DTI 16V	99-04			MP0251	1604002	
2.0 DTI 16V	99-04	MP0252	13123486			
2.0 DTI 16V	99-04	MP0253	09117622			
2.0 OPC - 2.2 DTI	02-04			MP0251	1604002	
2.0 OPC - 2.2 DTI	02-04	MP0252	13123486			
2.0 OPC - 2.2 DTI	02-04	MP0253	09117622			
2.2 16V	01-04	MP0252	13123486			
2.2 16V	01-04	MP0253	09117622			
ASTRA G Tre volumi						
1.2 16V - 1.4 16V - 1.6 - 1.6 16V - 1.8 16V - 2.0 16V - 2.0 DI	98-05	MP0252	13123486			
1.2 16V - 1.4 16V - 1.6 - 1.6 16V - 1.8 16V - 2.0 16V - 2.0 DI	98-05	MP0253	09117622			
1.4	07-09	MP0253	09117622			
1.7 CDTI	03-09	MP0253	09117622			
1.7 DTI 16V	00-05	MP0252	13123486			
1.7 DTI 16V	00-05	MP0253	09117622			
1.7 TD	98-00	MP0252	13123486			
1.7 TD	98-00	MP0253	09117622			
1.8 16V	98-00			MP0251	1604002	
2.0 16V - 2.0 DI	98-05			MP0251	1604002	
2.0 DTI 16V	99-05	MP0252	13123486			
2.0 DTI 16V	99-05	MP0253	09117622			
2.2 16V	01-05	MP0252	13123486			
2.2 16V	01-05	MP0253	09117622			
2.2 DTI	02-05	MP0253	09117622			

follow OPEL

MODELLO MODEL	ANNO YEAR	ANT CORAM FRONT CORAM	ANT ORIGINALE FRONT ORIGINAL	POST CORAM REAR CORAM	POST ORIGINALE REAR ORIGINAL	NOTE NOTES
ASTRA H						
1.2 - 1.3 CDTI	05-10	MP0247	1603254			
1.2 - 1.3 CDTI	05-10			MP0255	1604316	
1.4 - 1.8 - 1.9 CDTI - 1.9 CDTI 16V - 2.0 Turbo	04-10	MP0247	1603254			
1.4 - 1.8 - 1.9 CDTI - 1.9 CDTI 16V - 2.0 Turbo	04-10			MP0255	1604316	
1.4 LPG	09-10	MP0247	1603254			
1.6 - 1.7 CDTI	04-14	MP0247	1603254			
1.6 - 1.7 CDTI	04-14			MP0255	1604316	
1.6 Turbo	07-10	MP0247	1603254			
1.6 Turbo	07-10			MP0255	1604316	
1.7 CDTI	07-14	MP0256	1603841			
1.8	06-10	MP0258	13502829			
1.9 CDTI - 1.9 CDTI 16V - 2.0 Turbo	04-10	MP0256	1603841			
ASTRA H Cassone						
1.3 CDTI	05-10	MP0247	1603254			
1.3 CDTI	05-10			MP0255	1604316	
1.6 EcoTec	04-04	MP0247	1603254			
1.6 EcoTec	04-04			MP0255	1604316	
1.7 CDTI	07-10	MP0247	1603254			
1.7 CDTI	07-10	MP0256	1603841			
1.7 CDTI	07-10	MP0258	13502829			
1.7 CDTI - 1.9 CDTI - 1.9 CDTI 16V	04-10			MP0255	1604316	
1.9 CDTI	05-10	MP0256	1603841			
1.9 CDTI 16V	04-10	MP0256	1603841			
ASTRA H CLASSIC 2 volumi						
1.7 CDTI	09->	MP0256	1603841			
ASTRA H CLASSIC SW						
1.7 CDTI - 1.7 CDTi	09->	MP0256	1603841			
ASTRA H GTC						
1.3 CDTI - 1.4 - 1.6 - 1.7 CDTI - 1.7 CDTi - 1.8 - 1.9 CDTI - 1.9 CDTi - 1.9 CDTi 16V - 2.0 Turbo	05-10			MP0255	1604316	
1.3 CDTI - 1.4 - 1.6 - 1.7 CDTI - 1.7 CDTi - 1.8 - 1.9 CDTI - 2.0 Turbo	05-10	MP0247	1603254			
1.6 Turbo	07-10	MP0247	1603254			
1.6 Turbo	07-10			MP0255	1604316	
1.7 CDTI	07-10	MP0256	1603841			
1.9 CDTI - 1.9 CDTi 16V - 2.0 Turbo	05-10	MP0256	1603841			

follow OPEL

MODELLO MODEL	ANNO YEAR	ANT CORAM FRONT CORAM	ANT ORIGINALE FRONT ORIGINAL	POST CORAM REAR CORAM	POST ORIGINALE REAR ORIGINAL	NOTE NOTES
ASTRA H Station wagon						
1.3 CDTI	05-10			MP0255	1604316	
1.3 CDTI - 1.9 CDTI	05-10	MP0247	1603254			
1.4 - 1.6 - 1.9 CDTI - 1.9 CDTI 16V - 2.0 Turbo	04-10			MP0255	1604316	
1.4 - 1.6 - 1.9 CDTI 16V - 2.0 Turbo	04-10	MP0247	1603254			
1.4 LPG - 1.6 LPG	09-10	MP0247	1603254			
1.6 Turbo	07-10	MP0247	1603254			
1.6 Turbo	07-10			MP0255	1604316	
1.7 CDTI	07-14	MP0256	1603841			
1.7 CDTI - 1.8	04-14	MP0247	1603254			
1.7 CDTI - 1.8	04-14			MP0255	1604316	
1.9 CDTI	05-10	MP0256	1603841			
1.9 CDTI 16V - 2.0 Turbo	04-10	MP0256	1603841			
ASTRA H Tre volumi						
1.3 CDTI	07-10	MP0247	1603254			
1.3 CDTI	07-10			MP0255	1604316	
1.6	07-14			MP0255	1604316	
1.6 - 1.7 CDTI	07-14	MP0247	1603254			
1.8	07-12	MP0247	1603254			
1.8	07-12			MP0255	1604316	
ASTRA H TwinTop						
1.6 - 1.8	05-10	MP0247	1603254			
1.6 - 1.8 - 1.9 CDTi - 2.0 Turbo	05-10			MP0255	1604316	
1.6 Turbo	07-10	MP0247	1603254			
1.6 Turbo	07-10			MP0255	1604316	
1.8	05-10			MP0251	1604002	
1.8	05-10	MP0252	13123486			
2.0 Turbo	05-10	MP0256	1603841			
ASTRA J						
1.3 CDTI - 1.4 - 1.4 Turbo - 1.6 - 1.6 Turbo - 1.7 CDTI - 2.0 CDTI	09-15	MP0258	13502829			
1.6 CDTi	13-15	MP0258	13502829			
1.6 SIDI - 2.0 BiTurbo CDTI	12-15	MP0258	13502829			

follow OPEL

MODELLO MODEL	ANNO YEAR	ANT CORAM FRONT CORAM	ANT ORIGINALE FRONT ORIGINAL	POST CORAM REAR CORAM	POST ORIGINALE REAR ORIGINAL	NOTE NOTES
ASTRA J GTC						
1.4 - 1.7 CDTI - 1.8 - 2.0 CDTI	11-15	MP0258	13502829			
1.6	11->	MP0258	13502829			
1.6 CDTI	14->	MP0258	13502829			
1.6 SIDI - 2.0	12->	MP0258	13502829			
2.0 BiTurbo CDTI	12-15	MP0258	13502829			
ASTRA J Sport Tourer						
1.3 CDTI	10-14	MP0258	13502829			
1.4 - 1.4 Turbo - 1.6 - 1.6 Turbo - 1.7 CDTI - 2.0 CDTI	10-15	MP0258	13502829			
1.4 LPG	11-15	MP0258	13502829			
1.6 CDTi	13-15	MP0258	13502829			
1.6 SIDI - 2.0 BiTurbo CDTI	12-15	MP0258	13502829			
ASTRA J Tre volumi						
1.3 CDTI - 1.4 - 1.4 Turbo - 1.7 CDTI	12-15	MP0258	13502829			
1.4 LPG - 1.6 CDTi	14->	MP0258	13502829			
1.6 - 1.6 Turbo	12->	MP0258	13502829			
1.6 SIDI	12-16	MP0258	13502829			
CALIBRA						
2.0 t. S1<		MP0066	326184			
2.0 t. T1>		MP0127	326194			
2.0-2.5 t. TP1>		MP0130	326195			
CASCADA						
1.4 - 1.4 Turbo - 1.6 - 2.0 CDTI	13-18	MP0258	13502829			
1.6 SIDI	13-19	MP0258	13502829			
COMBO						
Tutti i tipi/All types/Tous types	01-02			MP0129	1604004	
COMBO Cassone						
1.7 CDTI 16V	04->			MP0251	1604002	
1.7 DI 16V - 1.7 DTI 16V	01->			MP0251	1604002	

follow OPEL

MODELLO MODEL	ANNO YEAR	ANT CORAM FRONT CORAM	ANT ORIGINALE FRONT ORIGINAL	POST CORAM REAR CORAM	POST ORIGINALE REAR ORIGINAL	NOTE NOTES
COMBO Tour						
1.3 CDTI 16V	05-11			MP0251	1604002	
1.7 CDTI 16V	04-11			MP0251	1604002	
CORSA						
A Tutte le versioni	83-92	MP0065	326197			
B Tutte le versioni	93-00	MP0065	326197			
C Tutte le versioni	01->	MP0200	326001			Except Z17DTH
CORSA C Cassone						
1.2	05-06			MP0233	51787397	
1.7 CDTi	03-12			MP0251	1604002	
CORSA D						
1.0 - 1.2 - 1.2 LPG - 1.3 CDTI - 1.4 - 1.4 LPG - 1.6 Turbo - 1.7 CDTI	06-14			MP0233	51787397	
CORSA D Cassone						
1.0 - 1.2	10-14			MP0233	51787397	
1.3 CDTI	09-14			MP0233	51787397	
INSIGNIA A						
1.4	11-17	MP0257	13580135			
1.4 LPG	12-17	MP0257	13580135			
1.6 - 1.6 Turbo - 1.8 - 2.0 Biturbo CDTI - 2.0 CDTI - 2.0 Turbo - 2.0 Turbo 4x4 - 2.8 V6 Turbo 4x4	08-17	MP0257	13580135			
1.6 CDTi	15-17	MP0257	13580135			
1.6 SIDI	13-17	MP0257	13580135			
2.0 Biturbo CDTI 4x4 - 2.8 V6 Turbo OPC 4x4	09-17	MP0257	13580135			
2.0 CDTI 4x4 - 2.0 E85 Turbo	10-17	MP0257	13580135			

follow OPEL

MODELLO MODEL	ANNO YEAR	ANT CORAM FRONT CORAM	ANT ORIGINALE FRONT ORIGINAL	POST CORAM REAR CORAM	POST ORIGINALE REAR ORIGINAL	NOTE NOTES
INSIGNIA A Sport Tourer						
1.4	11-13	MP0257	13580135			
1.4 LPG	12-13	MP0257	13580135			
1.6 - 2.8 V6 Turbo 4x4	08-12	MP0257	13580135			
1.6 CDTi	15-17	MP0257	13580135			
1.6 SIDI	13-14	MP0257	13580135			
1.6 Turbo	09-13	MP0257	13580135			
1.8 - 2.0 Turbo 4x4 - 2.8 V6 Turbo 4x4	08-13	MP0257	13580135			
2.0 Biturbo CDTI - 2.0 Biturbo CDTI 4x4	08-17	MP0257	13580135			
2.0 CDTI	08-16	MP0257	13580135			
2.0 CDTI 4x4	10-16	MP0257	13580135			
2.0 E85 Turbo	10-11	MP0257	13580135			
2.0 Turbo	08-14	MP0257	13580135			
2.8 V6 Turbo OPC 4x4	09-15	MP0257	13580135			
INSIGNIA A Tre volumi						
1.4	11-17	MP0257	13580135			
1.4 LPG	12-17	MP0257	13580135			
1.6 - 1.6 Turbo - 1.8 - 2.0 Biturbo CDTI - 2.0 Biturbo CDTI 4x4 - 2.0 CDTI - 2.0 Turbo - 2.0 Turbo 4x4	08-17	MP0257	13580135			
1.6 CDTi	15-17	MP0257	13580135			
1.6 SIDI	13-17	MP0257	13580135			
2.0 CDTI 4x4	10-17	MP0257	13580135			
2.0 Turbo E85 - 2.8 V6 Turbo 4x4	08-17	MP0257	13580135			
2.8 V6 Turbo OPC 4x4	09-17	MP0257	13580135			
KADETT						
1.6 S-1.6 D-1.6 DA-1.6 SV - 1.8-2.0	85-93	MP0066	326184			
D Benzina	80-84	MP0065	326197			
D Diesel	80-84	MP0065	326197			
E 1.2-1.3-1.4-1.6 NZ-C 1.6 LZ-C 1.6 NZ	85-93	MP0065	326197			
MERIVA						
1.6 16 v - 1.7 CDTI - 1.8 16 v		MP0200	326001			
MERIVA A MPV						
1.3 CDTI - 1.7 CDTI - 1.7 DTI	03-10			MP0251	1604002	
1.6	06-10			MP0251	1604002	
1.6 Turbo	05-10			MP0251	1604002	

follow OPEL

MODELLO MODEL	ANNO YEAR	ANT CORAM FRONT CORAM	ANT ORIGINALE FRONT ORIGINAL	POST CORAM REAR CORAM	POST ORIGINALE REAR ORIGINAL	NOTE NOTES
MERIVA B MPV						
1.3 CDTI	10-14			MP0255	1604316	
1.4 - 1.7 CDTI	10-17			MP0255	1604316	
1.4 LPG	11-17			MP0255	1604316	
1.6 CDTI	14-17			MP0255	1604316	
1.6 CDTi	13-17			MP0255	1604316	
OMEGA						
1.8	-09/93	MP0127	326194			
OPTRA						
Tutti i tipi/All types/Tous types		MP0229	95492092			
OPTRA II						
Tutti i tipi/All types/Tous types		MP0230	96549779			
SIGNUM 2 volumi						
1.8 - 2.0 Turbo - 2.2 direct - 3.0 V6 CDTI	03-08	MP0241	1603143			
1.8 - 2.0 Turbo - 2.2 direct - 3.0 V6 CDTI	03-08			MP0254	1604314	
1.9 CDTI	04-08	MP0241	1603143			
1.9 CDTI	04-08			MP0254	1604314	
2.0 DTI - 2.2 DTI	03-04	MP0241	1603143			
2.0 DTI - 2.2 DTI	03-04			MP0254	1604314	
2.8 V6 CDTI	05-08	MP0241	1603143			
2.8 V6 CDTI	05-08			MP0254	1604314	
3.2 V6	03-05	MP0241	1603143			
3.2 V6	03-05			MP0254	1604314	
TIGRA						
Tutte le versioni	95-00	MP0065	326197			
VECTRA A						
1.4 NV	89-95	MP0065	326197			
1.6- 1.6 i - 1.6 SV - 1.7 D/TD - 2.0 i GT - 2.0 i 16v	93-95			MP0129	1604004	
1.6 SV-1.6 NZ - 1.6 SZ	89-95	MP0065	326197			
1.8 - 2.0	89-95	MP0066	326184			
2.5 V6	93-95			MP0251	1604002	

follow OPEL

MODELLO MODEL	ANNO YEAR	ANT CORAM FRONT CORAM	ANT ORIGINALE FRONT ORIGINAL	POST CORAM REAR CORAM	POST ORIGINALE REAR ORIGINAL	NOTE NOTES
VECTRA A 2 volumi						
2.5 V6	93-95			MP0251	1604002	
VECTRA B						
1.6 i - 1.6 i 16V - 1.8 i 16V	95-02			MP0251	1604002	
1.6 LZ2/X - 1.6 XEL/Y - 1.6XE/Z - 1.6 XE- 1.7 TD Ch. X1000001-> X7000001->	96-01	MP0130	326195			
1.6 SZR- X 1.6 XEL Ch. ->W1285446 ->W5276825 ->7154258	96-01	MP0128	326196			
1.7 TD	95-98			MP0251	1604002	
1.8 - 2.0 Ch. X1000001 -> X7000001->	96-01	MP0130	326195			
2.0 DI 16V	96-02			MP0251	1604002	
2.0 DTI 16V	97-02			MP0251	1604002	
2.0 i 16 - 2.5 i V6	95-00			MP0251	1604002	
2.2 DTI 16V - 2.2 i 16V - 2.6 i V6	00-02			MP0251	1604002	
X 1.6 SZR/X - 1.6 XEL X 1.7 TD Ch. X1000001 -> X7000001->	96-01	MP0130	326195			
X 1.8 XE/Z 1.8 XE/ X 1.8 XE1/Z 1.8 XEL	96-01	MP0127	326194			
X 2.0 DTL/ X 2.0 DTH	96-01	MP0127	326194			
Y 2.0 - Y 2.2 - X 2.5 Ch. X1000001 -> X7000001->	96-01	MP0130	326195			
VECTRA B 2 volumi						
1.6 i - 1.8 i 16V	95-03			MP0251	1604002	
1.6 i 16V	95-02			MP0251	1604002	
1.7 TD	95-98			MP0251	1604002	
2.0 DI 16V	96-00			MP0251	1604002	
2.0 DTI 16V	97-03			MP0251	1604002	
2.0 i 16V	95-00			MP0251	1604002	
2.2 DTI 16V - 2.2 i 16V - 2.6 i V6	00-03			MP0251	1604002	
VECTRA B Station wagon						
1.6 i 16V	96-02			MP0251	1604002	
1.8 i 16V	96-03			MP0251	1604002	
2.0 DI 16V	96-00			MP0251	1604002	
2.0 DTI 16V	97-03			MP0251	1604002	
2.0 i 16V - 2.5 i V6	96-00			MP0251	1604002	
2.2 DTI 16V - 2.2 i 16V - 2.6 i V6	00-03			MP0251	1604002	

follow OPEL

MODELLO MODEL	ANNO YEAR	ANT CORAM FRONT CORAM	ANT ORIGINALE FRONT ORIGINAL	POST CORAM REAR CORAM	POST ORIGINALE REAR ORIGINAL	NOTE NOTES
VECTRA C						
1.6 - 2.0 16V Turbo - 2.2 DGi - 3.0 CDTI	03-08	MP0241	1603143			
1.6 - 2.8 V6 Turbo	05-08			MP0254	1604314	
1.6 16V	04-05	MP0241	1603143			
1.6 16V	04-05			MP0254	1604314	
1.8 - 1.8 16V - 2.2 16V	02-08	MP0241	1603143			
1.8 - 1.8 16V - 2.2 16V	02-08			MP0254	1604314	
1.8 - 2.0	89-95	MP0066	326184			
1.9 CDTI	04-09	MP0241	1603143			
1.9 CDTI	04-09			MP0254	1604314	
2.0 16V Turbo - 2.2 DGi - 3.0 CDTI	03-08			MP0254	1604314	
2.0 DTI 16V	02-06	MP0241	1603143			
2.0 DTI 16V - 3.2 V6	02-06			MP0254	1604314	
2.2 DTI 16V	02-04	MP0241	1603143			
2.2 DTI 16V	02-04			MP0254	1604314	
2.8 V6 Turbo - 3.2 V6	02-04	MP0241	1603143			
VECTRA C GTS						
1.6 - 1.8 - 2.8 V6 Turbo	05-08	MP0241	1603143			
1.6 - 1.8 - 2.8 V6 Turbo	05-08			MP0254	1604314	
1.8 16V - 2.2 16V	02-08	MP0241	1603143			
1.8 16V - 2.2 16V	02-08			MP0254	1604314	
1.9 CDTI	04-09	MP0241	1603143			
1.9 CDTI	04-09			MP0254	1604314	
2.0 16V Turbo - 2.2 DGi - 3.0 CDTi	03-08	MP0241	1603143			
2.0 16V Turbo - 2.2 DGi - 3.0 CDTi	03-08			MP0254	1604314	
2.0 DTI 16V	02-05	MP0241	1603143			
2.0 DTI 16V	02-05			MP0254	1604314	
2.2 DTI 16V - 3.2 V6	02-06	MP0241	1603143			
2.2 DTI 16V - 3.2 V6	02-06			MP0254	1604314	
VECTRA C Station wagon						
1.6 - 2.8 V6 Turbo	05-08	MP0241	1603143			
1.6 - 2.8 V6 Turbo	05-08			MP0254	1604314	
1.6 16V	04-05	MP0241	1603143			
1.6 16V	04-05			MP0254	1604314	
1.8 - 2.0 Turbo - 2.2 direct - 3.0 V6 CDTI	03-08	MP0241	1603143			
1.8 - 2.0 Turbo - 2.2 direct - 3.0 V6 CDTI	03-08			MP0254	1604314	
1.9 CDTI	04-09	MP0241	1603143			
1.9 CDTI	04-09			MP0254	1604314	
2.0 DTI - 2.2 DTI - 3.2 V6	03-05	MP0241	1603143			
2.0 DTI - 2.2 DTI - 3.2 V6	03-05			MP0254	1604314	

follow OPEL

MODELLO MODEL	ANNO YEAR	ANT CORAM FRONT CORAM	ANT ORIGINALE FRONT ORIGINAL	POST CORAM REAR CORAM	POST ORIGINALE REAR ORIGINAL	NOTE NOTES
ZAFIRA A MPV						
1.6 16V - 1.8 16V - 2.0 DI 16V	99-05			MP0251	1604002	
1.6 16V - 1.8 16V - 2.0 DI 16V	99-05	MP0252	13123486			
1.6 16V - 1.8 16V - 2.0 DI 16V	99-05	MP0253	09117622			
1.6 CNG - 2.0 OPC	01-05			MP0251	1604002	
1.6 CNG - 2.0 OPC	01-05	MP0252	13123486			
1.6 CNG - 2.0 OPC	01-05	MP0253	09117622			
2.0 DTI 16V - 2.2 16V	00-05			MP0251	1604002	
2.0 DTI 16V - 2.2 16V	00-05	MP0252	13123486			
2.0 DTI 16V - 2.2 16V	00-05	MP0253	09117622			
2.2 DTI 16V	02-05			MP0251	1604002	
2.2 DTI 16V	02-05	MP0252	13123486			
2.2 DTI 16V	02-05	MP0253	09117622			
ZAFIRA B						
1.6 - 1.6 CNG - 1.8 - 1.9 CDTI	05-15	MP0247	1603254			
1.6 - 1.8 - 1.9 CDTI	05-15			MP0255	1604316	
1.6 CNG - 1.9 CDTI	05-15	MP0256	1603841			
1.6 CNG Turbo	05-10	MP0256	1603841			
1.6 FlexFuel	08-12	MP0256	1603841			
1.7 CDTI	08-15			MP0255	1604316	
1.7 CDTI	08-15	MP0256	1603841			
2.0	05-10	MP0247	1603254			
2.0	05-10			MP0255	1604316	
2.0	05-10	MP0256	1603841			
2.2	05-12	MP0247	1603254			
2.2	05-12			MP0255	1604316	
2.2	05-12	MP0256	1603841			
ZAFIRA B Cassone						
1.6 CNG Turbo	09-15	MP0256	1603841			
1.7 CDTI VAN	08-15	MP0256	1603841			

follow OPEL

MODELLO MODEL	ANNO YEAR	ANT CORAM FRONT CORAM	ANT ORIGINALE FRONT ORIGINAL	POST CORAM REAR CORAM	POST ORIGINALE REAR ORIGINAL	NOTE NOTES
ZAFIRA FAMILY B						
1.6 - 1.6 CNG - 1.8 - 1.9 CDTI	05-15	MP0247	1603254			
1.6 - 1.8 - 1.9 CDTI	05-15			MP0255	1604316	
1.6 CNG - 1.9 CDTI	05-15	MP0256	1603841			
1.6 CNG Turbo	05-10	MP0256	1603841			
1.6 FlexFuel	08-12	MP0256	1603841			
1.7 CDTI	08-15			MP0255	1604316	
1.7 CDTI	08-15	MP0256	1603841			
2.0	05-10	MP0247	1603254			
2.0	05-10			MP0255	1604316	
2.0	05-10	MP0256	1603841			
2.2	05-12	MP0247	1603254			
2.2	05-12			MP0255	1604316	
2.2	05-12	MP0256	1603841			
ZAFIRA TOURER C						
1.4 - 1.4 LPG - 1.6 CNG - 1.8 - 2.0 CDTi	13-18	MP0258	13502829			
1.6	12->	MP0258	13502829			
1.6 CDTI - 1.6 SIDI - 2.0 BiTurbo CDTI	13->	MP0258	13502829			

PEUGEOT

MODELLO MODEL	ANNO YEAR	ANT CORAM FRONT CORAM	ANT ORIGINALE FRONT ORIGINAL	POST CORAM REAR CORAM	POST ORIGINALE REAR ORIGINAL	NOTE NOTES
1007						
1.4 - 1.4 16V - 1.4 Hdi - 1.6 16V	05>			MP0226	3748.79	
1.6 Hdi	07>			MP0226	3748.79	
106						
GTI - XN - XR/XRD/XT		MP0098	330776			t. 51450001>
XN-XR		MP0095	330762			t. 51450001>
107						
1.0 - 1.4 Hdi	05-14			MP0238	374885	
205						
1.9 GTI		MP0096	330769			t. 23950001>
GE-GL-GR-SR-GT-GLD-GRD-SRD		MP0069	330749			t. 23950000<
Junior		MP0069	330749			t. 23950001>
Junior-Green-Open-Roland Garros-Look		MP0069	330749			t. 23950000<
XAD-XLD-XRD-XTD-XA-XE-XL-XR-XS		MP0069	330749			t. 23950000<

follow PEUGEOT

MODELLO MODEL	ANNO YEAR	ANT CORAM FRONT CORAM	ANT ORIGINALE FRONT ORIGINAL	POST CORAM REAR CORAM	POST ORIGINALE REAR ORIGINAL	NOTE NOTES
206						
1.1-1.4-1.6-1.9		MP0098	330776			
2.0		MP0096	330769			
206 2 Volumi						
1.4 16V- 2.0 RC	03>			MP0226	3748.79	
1.6 16V- 2.0 S16	00>			MP0226	3748.79	
1.6 Hdi 110	04>			MP0226	3748.79	
206 CC						
1.6 16V-2.0 S16	00>			MP0226	3748.79	
1.6 Hdi 110	05>			MP0226	3748.79	
206 SW						
1.1 - 1.4 - 1.6 16V - 2.0 16V - 2.0 Hdi	02>			MP0226	3748.79	
1.4 16V	03>			MP0226	3748.79	
1.6 Hdi 110	04>			MP0226	3748.79	
305 II						
1.3	82-85			MP0215	9558882680	
1.5	82-90			MP0215	9558882680	
1.6 - 1.9 - 1.9 Diesel	82-88			MP0215	9558882680	
305 II Break						
1.3 - 1.5	82-86			MP0215	9558882680	SW
1.6	83-88			MP0215	9558882680	SW
1.9	84-88			MP0215	9558882680	SW
1.9 Diesel	82-88			MP0215	9558882680	SW
306						
1.1 - 1.4 - 1.4 SL - 1.6 - 1.6 SR - 1.8 - 1.9 - 2.0	93->	MP0096	330769			t. 32000001>
1.1 - 1.4 SL - 1.6 Ch. ->0 08091	05/93->	MP0069	330749			t. 32000001>
1.4 - 1.4 SL Ch. 0 08092 ->	97->	MP0098	330776			t. 32000001>
1.6 SR Ch. ->0 08091	97-00	MP0069	330749			
307						
1.6 16v - 2.0 HDI		MP0096	330769			

follow PEUGEOT

MODELLO MODEL	ANNO YEAR	ANT CORAM FRONT CORAM	ANT ORIGINALE FRONT ORIGINAL	POST CORAM REAR CORAM	POST ORIGINALE REAR ORIGINAL	NOTE NOTES
309						
1.1-1.3		MP0069	330749			
1.6-1.7-1.9		MP0096	330769			
405						
Tutti i tipi/All types/Tous types		MP0096	330769			
1.9 4X4		MP0096	330769	MP0096	330769	
405 I						
1.4 - 1.6 - 1.8 TD - 1.9 - 1.9 Diesel - 1.9 Injection - 1.9 Sport MI-16	87-92			MP0215	9558882680	
1.4 (15B)	87-92			MP0217	3701.58	
1.6 (15B)	87-92			MP0217	3701.58	
1.8 Turbo Diesel (15B)	88-92			MP0217	3701.58	
1.9 (15B)	87-92			MP0217	3701.58	
1.9 Diesel (15B)	88-92			MP0217	3701.58	
1.9 Injection (15B)	87-92			MP0217	3701.58	
1.9 Sport MI-16	87-92			MP0217	3701.58	
405 I Break						
1.4 (15E)	88-92			MP0217	3701.58	
1.6 (15E)	88-92			MP0217	3701.58	
1.6 - 1.8 TD - 1.9 - 1.9 Diesel	88-92			MP0215	9558882680	SW
1.8 TD (15E)	88-92			MP0217	3701.58	
1.9 (15E)	88-92			MP0217	3701.58	
1.9 D (15E)	88-92			MP0217	3701.58	
405 II						
1.4 - 1.6 - 1.8 - 1.9 D - 1.9 TD - 2.0	92-95			MP0217	3701.58	
1.4 - 1.6 - 1.8 - 1.9 D - 1.9 TD - 2.0 - 2.0 MI-16	92-95			MP0215	9558882680	
2.0 16V	94-95			MP0215	9558882680	
2.0 16V	94-95			MP0217	3701.58	
2.0 MI-16	92-95			MP0217	3701.58	
405 II Break						
1.4 - 1.6 - 1.8 - 1.9 D - 1.9 TD - 2.0	92-96			MP0215	9558882680	SW
1.4 - 1.6 - 1.8 - 1.9 D - 1.9 TD - 2.0	92-96			MP0217	3701.58	

follow PEUGEOT						
MODELLO MODEL	**ANNO YEAR**	**ANT CORAM FRONT CORAM**	**ANT ORIGINALE FRONT ORIGINAL**	**POST CORAM REAR CORAM**	**POST ORIGINALE REAR ORIGINAL**	**NOTE NOTES**
406						
Tutti i tipi/All types/Tous types 1.8 -1.9 - 2.0 - 2.1 ABS 29 denti	95-02 95-99	MP0096	330769	MP0176 MP0201	374828 374835	Only wheel hub Only wheel hub
806						
1.9 - 2.0 ABS 48 denti	94-02	MP0097	330764	MP0178	335028	Only wheel hub
807						
Tutti i tipi/All types/Tous types	02->	MP0097	330764			
BOXER						
1.9 D -1.9 TD - 2.0 i - 2.4 D/TD - 2.4 TDI - 2.4 4X4 1.9 D -1.9 TD - 2.0 i - 2.4 D/TD - 2.4 TDI - 2.4 4X4	94->\ 94->	MP0034 MP0035	330765 330766			Except 18 ql 18 ql
BOXER Autobus						
2.2 HDi 100 - 2.2 HDi 120 - 3.0 HDi 160 2.2 HDi 110 - 2.2 HDi 130 - 2.2 HDi 150 - 3.0 HDi 175 3.0 HDi 145	06->\ 11->\ 10->			MP0243 MP0243 MP0243	1606374780 1606374780 1606374780	
BOXER Furgonato						
2.2 HDi 100 - 2.2 HDi 120 - 3.0 HDi 2.2 HDi 110 - 2.2 HDi 130 - 2.2 HDi 150 - 3.0 HDi 175 3.0 HDi 145	06->\ 11->\ 10->			MP0243 MP0243 MP0243	1606374780 1606374780 1606374780	
BOXER Pianale piatto						
2.2 HDi 100 - 2.2 HDi 120 - 3.0 HDi - 3.0 HDi 160 2.2 HDi 110 - 2.2 HDi 130 - 2.2 HDi 150 - 3.0 HDi 175 3.0 HDi 145	06->\ 11->\ 10->			MP0243 MP0243 MP0243	1606374780 1606374780 1606374780	
J5 Autobus						
2.0 - 2.5 D	81-90	MP0125	7569715			
J5 Furgonato						
1.8	83-88	MP0125	7569715			

follow PEUGEOT

MODELLO MODEL	ANNO YEAR	ANT CORAM FRONT CORAM	ANT ORIGINALE FRONT ORIGINAL	POST CORAM REAR CORAM	POST ORIGINALE REAR ORIGINAL	NOTE NOTES
J5 Pianale piatto						
2.0	83-88	MP0125	7569715			
2.5 D	81-90	MP0125	7569715			
PARTNER (RANCH)						
Tutti i tipi/All types/Tous types	96-01			MP0176	374828	Only wheel hub
1.4 - 1.9 D	96-01	MP0096	330769			
ABS 29 denti	96-01			MP0177	374836	Only wheel hub

PLYMOUTH

MODELLO MODEL	ANNO YEAR	ANT CORAM FRONT CORAM	ANT ORIGINALE FRONT ORIGINAL	POST CORAM REAR CORAM	POST ORIGINALE REAR ORIGINAL	NOTE NOTES
VOYAGER						
Tutti i tipi/All types/Tous types	90-95	MP0175	4641517			"15"" wheel"

RENAULT

MODELLO MODEL	ANNO YEAR	ANT CORAM FRONT CORAM	ANT ORIGINALE FRONT ORIGINAL	POST CORAM REAR CORAM	POST ORIGINALE REAR ORIGINAL	NOTE NOTES
CLIO						
1.4 ABS	04/94-03/96	MP0075	7700768319			
1.4-1.6	04/98->	MP0075	7700768319			
1.4-1.8	04/96-03/98	MP0075	7700768319			
1.8-1.9	->03/94	MP0075	7700768319			
1.8-1.9 D	04/94-03/96	MP0075	7700768319			
Elettrica	91->			MP0131	7701204667	
CLIO II						
1.2	98->	MP0219	8200208335			
1.2 16V	01->	MP0219	8200208335			
1.5 dCi	01->	MP0219	8200208335			
2.0 16V	00->	MP0219	8200208335			
ESPACE						
(J112,S112,J115,S115,J116,J117 S/ABS)	85-90	MP0077	7700308572			
2.0 (J636)-2.1 D(J63D/E,S63D,J633/634/635,S635),2.2 (J/S637,J63G)	91-97			MP0131	7701204667	
2.0 RTE/RXE/RXT - 2.2 Dt RTE/RXE/RXT	03/97-06/00	MP0202	7700840156			
2.2 (J116/117)	87-90			MP0131	7701204667	

follow RENAULT						
MODELLO MODEL	ANNO YEAR	ANT CORAM FRONT CORAM	ANT ORIGINALE FRONT ORIGINAL	POST CORAM REAR CORAM	POST ORIGINALE REAR ORIGINAL	NOTE NOTES
EXPRESS						
Tutti i tipi/All types/Tous types	86-98			MP0131	7701204667	
Break	->91	MP0074	7700719140			
Furgone		MP0074	7700719140			
FUEGO						
Tutti i tipi/All types/Tous types	80-86	MP0076	7700715149			
TS-GTS-TX-GTX-Auto-TD	85->	MP0077	7700308572			Ch.61221>
TS-GTS-TX-GTX-Auto-TD	85			MP0131	7701204667	Ch.61221>
KANGOO						
1.2	97->	MP0219	8200208335			
1.2 - 1.4 - 1.9	->06/91	MP0075	7700768319			
1.2 16V	01->	MP0219	8200208335			
1.4	97->	MP0219	8200208335			
1.5 dCi	02->	MP0219	8200208335			
1.6 16V	01->	MP0219	8200208335			
1.9	00->	MP0219	8200208335			
1.9 dTi	00->	MP0219	8200208335			
KANGOO express						
1.2	97->	MP0219	8200208335			
1.2 16V	01->	MP0219	8200208335			
1.4	97->	MP0219	8200208335			
1.5 dCi	03->	MP0219	8200208335			
1.6 16V	01->	MP0219	8200208335			
1.9	97->	MP0219	8200208335			
1.9 dCi	03->	MP0219	8200208335			
1.9 dTi	00->	MP0219	8200208335			
KOLEOS I						
2.0 dCi - 2.0 dCi 4x4 - 2.5 - 2.5 4x4	08->			MP0249	43202-JG000	
LAGUNA						
Tutti i tipi/All types/Tous types		MP0132	7700830220			
1.9 dCi Dynamique/Privilege Grandtour	11/00->	MP0203	8200003026			120 CV

follow RENAULT						
MODELLO MODEL	ANNO YEAR	ANT CORAM FRONT CORAM	ANT ORIGINALE FRONT ORIGINAL	POST CORAM REAR CORAM	POST ORIGINALE REAR ORIGINAL	NOTE NOTES
LOGAN						
1.4	04->	MP0218	6001547685			
1.6	04->	MP0218	6001547685			
1.6	04->	MP0219	8200208335			
LOGAN Stetion wagon						
1.4	07->	MP0219	8200208335			
1.5 dCi	07->	MP0219	8200208335			
1.6	07->	MP0219	8200208335			
MASTER II Autobus						
1.9 DCI 80	04-06	MP0225	8200807882			
2.2 DCI 90	03-04	MP0225	8200807882			
2.5 DCI 120	03->	MP0225	8200807882			
MASTER II Furgonato						
1.9 DCI 80	04-06	MP0225	8200807882			
2.5 DCI 120	03-06	MP0225	8200807882			
2.8 DTI	03-04	MP0225	8200807882			
MASTER III Autobus						
2.5 DCI	06-10	MP0225	8200807882			
2.5 DCI 100	04-05	MP0225	8200807882			
3.0 DCI 140	03-06	MP0225	8200807882			
MEGANE						
1.4 16 v -1.6 16v - 1.9 Dci	10/02->	MP0194	8200046549			80CV
1.4-1.6	04/99->	MP0075	7700768319			
1.4-1.6-1.9D-1.9 Td-2.0 Classic RT-2.0 Coach RT-2.0 RT	-03/99	MP0075	7700768319			
1.6 RXT Scenic-1.6 RXE Scenic-1.9-2.0	04/99->	MP0133	7700415121			
2.0 Coach RT 16V-1.9 dt Scenic RT-2.0 Scenic RT	-03/99	MP0132	7700830220			
MEGANE I						
2.0 16v	96->	MP0219	8200208335			
2.0 i	96->	MP0219	8200208335			

follow RENAULT

MODELLO MODEL	ANNO YEAR	ANT CORAM FRONT CORAM	ANT ORIGINALE FRONT ORIGINAL	POST CORAM REAR CORAM	POST ORIGINALE REAR ORIGINAL	NOTE NOTES
MEGANE I Cabriolet						
2.0	97->	MP0219	8200208335			
2.0 16V	96-99	MP0219	8200208335			
2.0 16V IDE	99->	MP0219	8200208335			
2.0 i	99->	MP0219	8200208335			
MEGANE I Classic						
2.0 i	96->	MP0219	8200208335			
MEGANE I Coach						
2.0 16V	96->	MP0219	8200208335			
2.0 i	96->	MP0219	8200208335			
MEGANE Scenic						
2.0 i	97->	MP0219	8200208335			
R11						
Tutti i tipi/All types/Tous types	86->	MP0074	7700719140			
R18						
Tutti i tipi/All types/Tous types	81-86	MP0076	7700715149			
1.4 (R1350)	84-86			MP0131	7701204667	Ch. 122601>
1.4 (R1351) 4X2	84-86			MP0131	7701204667	Ch. 118201>
1.4 (R1353) 4X2	84-86			MP0131	7701204667	Ch. 9001>
1.4 (R2350)	84-86			MP0131	7701204667	Ch. 4601>
1.6 (R1345)	83-85			MP0131	7701204667	Ch. 49570>
1.6 (R134A)	84-85			MP0131	7701204667	
1.6 (R1355)	83-85			MP0131	7701204667	Ch. 1011>
2.0 (R1343)	85-86			MP0131	7701204667	Ch. 11002>
2.1 D (R1346/1356)	84-86			MP0131	7701204667	
2.1 D (R1354) 4X2	84-86			MP0131	7701204667	Ch. 50001>
2.1 D (R2354)	84-86			MP0131	7701204667	Ch. 5001>
SOCIETE (R2350)	84->	MP0077	7700308572			Ch. 4601>
SOCIETE D (R2354)	84-86	MP0077	7700308572			Ch. 5001>
TD (R1356)	84-85	MP0077	7700308572			
TD-GTD (R1354)	84-86	MP0077	7700308572			Ch. 50001>
TS-GTL (R1351)	85-87	MP0077	7700308572			Ch. 118201>
TX-GTX (R1353)	84-86	MP0077	7700308572			Ch. 9001>

follow RENAULT

MODELLO MODEL	ANNO YEAR	ANT CORAM FRONT CORAM	ANT ORIGINALE FRONT ORIGINAL	POST CORAM REAR CORAM	POST ORIGINALE REAR ORIGINAL	NOTE NOTES
R19						
1.2-Chamade 1.2	->05/92	MP0074	7700719140			
1.4-1.7-1.8-1.9 TD - Chamade 1.4-1.7-1.8-1.9 TD	>-05/92	MP0075	7700768319			
1.4-1.8-1.9 D	06/92->	MP0075	7700768319			
R20						
Tutti i tipi/All types/Tous types	81-84	MP0076	7700715149			
(R1270)- (R1276) LS, T- (R1277) GTD-TD	84			MP0131	7701204667	
(R1270) TD- (R1276) TD-GTD -(R1277) LS-TS-AUTO	84	MP0077	7700308572			
R21						
1.4-1.7-1.9		MP0075	7700768319			
1.6 (K48..)-1.7 (K/S48..)	88-92			MP0131	7701204667	
1.9 D (K/S48..)	88-92			MP0131	7701204667	
2.0(B/K/L48C,B/K/L48Y,B/K/L48R,B/K/L483)-2.0(L48Q,L489)-2.0(K48J)	88-92			MP0131	7701204667	
2.0-2.1		MP0076	7700715149			
2.1 D-Td	88-92			MP0131	7701204667	
2.2	88-92			MP0131	7701204667	
BACCARA S/ABS-GTX S/ABS-RX S/ABS-TI S/ABS-TURBO D/DX S/ABS-TXE-TXI S/ABS	86-93	MP0077	7700308572			
R21 NEVADA						
GTL-GTS- GTX S/ABS	86-93	MP0077	7700308572			
GTS S/ABS	86-93	MP0077	7700308572			
SD-TD-TL-TS-TSE-TURBO D/DX S/ABS	86-93	MP0077	7700308572			
R25						
2.0 S/ABS (B29H,B297)	89-90	MP0077	7700308572			
2.0-2.0 (B 29 H, B 297)	89-90			MP0131	7701204667	
2.0-2.1		MP0076	7700715149			
2.1 D-2.2	84-90			MP0131	7701204667	
2.2 S/ABS-2.1 D S/ABS	84-90	MP0077	7700308572			
R30						
(R1270) TD	84	MP0077	7700308572			Ch.. 27601->
(R1270) Turbo	84			MP0131	7701204667	
R4						
F6 furgone-GTL-TL		MP0073	7700628767			

follow RENAULT

MODELLO MODEL	ANNO YEAR	ANT CORAM FRONT CORAM	ANT ORIGINALE FRONT ORIGINAL	POST CORAM REAR CORAM	POST ORIGINALE REAR ORIGINAL	NOTE NOTES
R5						
GTL-TL-TS-TX	-> 08/84	MP0073	7700628767			
R6						
Tutti i tipi/All types/Tous types		MP0073	7700628767			
R9						
Td-TDE-TL-TLE-T	86->	MP0074	7700719140			
SAFRANE						
2.0 (B540)-2.1 D (B546)-2.2 (B541)	92-09/96			MP0131	7701204667	
2.0 (B54E,B542)	92-02/95			MP0131	7701204667	
2.0-2.5-3.0	11/96->	MP0164	7700830221			
2.1 TD S/ABS (B546)	92->	MP0077	7700308572			
2.2 (B54H,B543)-2.4 Td (B548)	92-02/95			MP0131	7701204667	
SUPER 5						
GTR - GT Turbo - TC/Campus/SC - TD/GTD - TL/GTL/GL - TSE/GTX/Automatic	85->	MP0074	7700719140			
TWINGO						
1,.1 - 1.2	93->	MP0074	7700719140			
1.2	07->	MP0219	8200208335			
1.2 16V	07->	MP0219	8200208335			
1.2 Turbo	07->	MP0219	8200208335			
1.5 dCi	07->	MP0219	8200208335			

ROVER

MODELLO MODEL	ANNO YEAR	ANT CORAM FRONT CORAM	ANT ORIGINALE FRONT ORIGINAL	POST CORAM REAR CORAM	POST ORIGINALE REAR ORIGINAL	NOTE NOTES
25						
1.4 - 1.6 - 1.8 - 2.0		MP0205	RFB000170			
400						
414-416-418	->04/95	MP0134	EJP7459			
414-416-420	05/95->	MP0135	RUB101250			
416 ABS - 418 ABS	11/93->04/95	MP0205	RFB000170			

follow ROVER

MODELLO MODEL	ANNO YEAR	ANT CORAM FRONT CORAM	ANT ORIGINALE FRONT ORIGINAL	POST CORAM REAR CORAM	POST ORIGINALE REAR ORIGINAL	NOTE NOTES
45						
1.4 - 2.0 TD - 2.0 V6		MP0135	RUB101250			
Serie 200						
214 Si 216 Sli - 200 - 211 - 214 16 v - 214 i - 216 16 v - 220 SDi	94-95 94->	MP0134 MP0205	EJP7459 RFB000170			

SAAB

MODELLO MODEL	ANNO YEAR	ANT CORAM FRONT CORAM	ANT ORIGINALE FRONT ORIGINAL	POST CORAM REAR CORAM	POST ORIGINALE REAR ORIGINAL	NOTE NOTES
600						
1500 cc 1500 cc	80-05/84 05/84-87			MP0002 MP0002	595948422 595948422	
90						
Tutti i tipi/All types/Tous types Tutti i tipi/All types/Tous types	85 85-87			MP0136 MP0136	8947384 8947384	Ch. F6009038< Ch. F6009039>
900						
Tutti i tipi/All types/Tous types Tutti i tipi/All types/Tous types Tutti i tipi/All types/Tous types	82-85 86-87 88-93			MP0136 MP0136 MP0138	8947384 8947384 8971095	Ch.C1021263/C2007508/C3006827 /C6001805< Ch.F1029810/F2015344/F3012345/ F7010669>
900 I Cabriolet						
2.0 -16 - 2.1 -16 2.0 S Turbo-16 2.0 Turbo-16 - 2.0 Turbo-16 S	90-94 91-94 86-94			MP0251 MP0251 MP0251	4778494 4778494 4778494	
900 I Combi Coupe						
2.0 Turbo-16	85-94			MP0251	4778494	
900 II						
2.0 -16 Turbo - 2.0 i - 2.3 -16 - 2.5 -24 V6	93-98			MP0251	4778494	
900 II Cabriolet						
2.0 -16 Turbo - 2.0 i - 2.3 -16 - 2.5 -24 V6	93-98			MP0251	4778494	

follow SAAB

MODELLO MODEL	ANNO YEAR	ANT CORAM FRONT CORAM	ANT ORIGINALE FRONT ORIGINAL	POST CORAM REAR CORAM	POST ORIGINALE REAR ORIGINAL	NOTE NOTES
900 II Coupé						
2.0 -16 Turbo	93-98			MP0251	4778494	
2.0 i	93-94			MP0251	4778494	
9000						
Tutti i tipi/All types/Tous types	85-89	MP0137	4107462			
Tutti i tipi/All types/Tous types	85-92			MP0138	8971095	
Tutti i tipi/All types/Tous types	90-97	MP0206	4107462			
9-3						
1.8 i - 1.9 TiD	04-15	MP0241	12799815			
1.8 i - 1.9 TiD	04-15			MP0254	24421906	
1.8 t - 2.0 t - 2.0 t BioPower - 2.2 TiD	02-15	MP0241	12799815			
1.8 t - 2.0 t - 2.0 t BioPower - 2.2 TiD	02-15			MP0254	24421906	
1.8 t BioPower	09-15	MP0241	12799815			
1.9 TTiD	07-15	MP0241	12799815			
1.9 TTiD	07-15			MP0254	24421906	
2.0 SE Turbo - 2.0 Turbo - 2.0 i - 2.2 TiD - 2.3 i	98-02			MP0251	4778494	
2.0 Turbo XWD	08-15	MP0241	12799815			
2.8 Turbo V6	05-15	MP0241	12799815			
2.8 Turbo V6	05-15			MP0254	24421906	
2.8 Turbo V6 XWD	08-11	MP0241	12799815			
2.8 Turbo V6 XWD	08-11			MP0254	24421906	
9-3 Cabriolet						
1,8 t - 2.0 t - 2.2 TiD	02-15	MP0241	12799815			
1,8 t - 2.0 t - 2.2 TiD	03-15			MP0254	24421906	
1.8 t BioPower - 1.9 TTiD - 2.0 t BioPower	07-15	MP0241	12799815			
1.9 TiD - 2.8 Turbo V6	06-15	MP0241	12799815			
1.9 TiD - 2.8 Turbo V6	06-15			MP0254	24421906	
1.9TTiD - 2.0 t BioPower	07-15			MP0254	24421906	
2.0 SE Turbo - 2.0 Turbo	98-02			MP0251	4778494	
2.0 Turbo	99-03			MP0254	24421906	

follow SAAB

MODELLO MODEL	ANNO YEAR	ANT CORAM FRONT CORAM	ANT ORIGINALE FRONT ORIGINAL	POST CORAM REAR CORAM	POST ORIGINALE REAR ORIGINAL	NOTE NOTES
9-3 Station wagon						
1.8 i - 1.8t 2.0 - 1.9 TiD - 2.0 t - 2.8 Turbo V6	05-15	MP0241	12799815			
1.8 i - 1.9 TiD - 2.0 t - 2.8 Turbo V6	05-15			MP0254	24421906	
1.9 TTiD - 2.0 t BioPower	07-15	MP0241	12799815			
1.9 TTiD - 2.0 t BioPower	07-15			MP0254	24421906	
2.0 t XWD	08-15	MP0241	12799815			
2.0 t XWD	08-15			MP0254	24421906	
2.8 Turbo V6 XWD	08-11	MP0241	12799815			
9-5						
1.6 Turbo - 2.0 TTiD - 2.0 TTiD XWD - 2.0 TiD - 2.0 Turbo - 2.0 Turbo XWD	10-12	MP0257	13580135			
2.0 t BioPower - 2.0 t BioPower XWD - 2.8 Turbo V6 XWD	10-12	MP0257	13580135			
2.3 t	97-09			MP0251	4778494	
2.3 Turbo	99-01			MP0251	4778494	
3.0 TiD	01-09			MP0251	4778494	
3.0 V6t	98-09			MP0251	4778494	
9-5 Station wagon						
2.3 Turbo	99-01			MP0251	4778494	
3.0 TiD	01-09			MP0251	4778494	
99						
Tutti i tipi/All types/Tous types	82-84			MP0136	8947384	Ch. F6009296>

SEAT

MODELLO MODEL	ANNO YEAR	ANT CORAM FRONT CORAM	ANT ORIGINALE FRONT ORIGINAL	POST CORAM REAR CORAM	POST ORIGINALE REAR ORIGINAL	NOTE NOTES
127						
903	76-85			MP0002	595948422	
Fura	81-85			MP0002	595948422	
128						
1200	76-80			MP0002	595948422	
ALHAMBRA						
1.8 T - 1.8 TDI - 1.9 TDI - 2.0 - 2.8 V6		MP0153	7M0501655	MP0153	7M0501655	

follow SEAT

MODELLO MODEL	ANNO YEAR	ANT CORAM FRONT CORAM	ANT ORIGINALE FRONT ORIGINAL	POST CORAM REAR CORAM	POST ORIGINALE REAR ORIGINAL	NOTE NOTES
ALPEA						
Tutti i tipi/All types/Tous types	04->	MP0172	1T0498621	MP0173	1K0501611E	ABS 48 poles
ALTEA						
1.2 TSI	10->	MP0234	1K0498621			
1.4 16V	06->	MP0234	1K0498621			
1.4 TSI - 1.8 TFSI	07->	MP0234	1K0498621			
1.6 - 1.9 TDI - 2.0 TDI 16V	04->	MP0234	1K0498621			
1.6 LPG - 1.6 TDI	09->	MP0234	1K0498621			
2.0 FSI - 2.0 TDI	04-09	MP0234	1K0498621			
2.0 TFSI	06-09	MP0234	1K0498621			
ALTEA XL						
1.2 TSI - 2.0 TDI 16V 4x4	10->	MP0234	1K0498621			
1.4 16V - 2.0 TDI 16V	06->	MP0234	1K0498621			
1.4 TSI - 1.8 TFSI - 2.0 TFSI 4x4	07->	MP0234	1K0498621			
1.6	04->	MP0234	1K0498621			
1.6 LPG - 1.6 TDI	09->	MP0234	1K0498621			
1.6 Multifuel - 1.9 TDI	06-10	MP0234	1K0498621			
2.0 FSI - 2.0 TDI - 2.0 TFSI	06-09	MP0234	1K0498621			
2.0 TDI 4x4	07-09	MP0234	1K0498621			
AROSA						
Tutti i tipi/All types/Tous types	99-07/02			MP0151	6X0501477	Ch. 6H-X-027501->
1.0 - 1.4 - 1.4 TDI -1.7 SDI		MP0152	6N0407613			
1.0 - 1.4 - 1.7 D	97-03			MP0139	333501117A	Left, ABS, drum brakes
1.0 - 1.4 - 1.7 D	97-03			MP0140	191501118C	Right, ABS, drum brakes
1.0 -1.4 - 1.7 D	97-03			MP0088	357501117	Drum brakes

follow SEAT

MODELLO MODEL	ANNO YEAR	ANT CORAM FRONT CORAM	ANT ORIGINALE FRONT ORIGINAL	POST CORAM REAR CORAM	POST ORIGINALE REAR ORIGINAL	NOTE NOTES
CORDOBA						
Tutti i tipi/All types/Tous types	97-99			MP0140	191501118C	Left, ABS, drum brakes
Tutti i tipi/All types/Tous types	97-99			MP0088	357501117	Drum brakes
Tutti i tipi/All types/Tous types	97-99			MP0139	333501117A	Left, ABS, drum brakes
Tutti i tipi/All types/Tous types	02->			MP0171	6Q0598611	ABS 48 poles
1.0 - 1.4 - 1.6 - 1.8 - 1.9 D	93-93			MP0139	333501117A	Left, ABS, drum brakes
1.0 - 1.3 - 1.4 - 1.6 - 1.8 - 1.9 D	93-96			MP0088	357501117	Drum brakes
1.0 - 1.4 - 1.6 - 1.8 - 1.9 D	93-96			MP0140	191501118C	Right,ABS,drum brakes
1.0 i -1.4 i - 1.4 i 16v - 1.6 i - 1.8 i - 1.8 i 16v - 1.9 D - 1.9 SDI/TDI - 1.9 TD - 2.0 i - 2.0 i 16 v	93-99	MP0050	357407615			
1.0 i -1.4 i - 1.4 i 16v - 1.6 i - 1.8 i - 1.8 i 16v - 1.9 D - 1.9 SDI/TDI - 1.9 TD - 2.0 i - 2.0 i 16 v	93-99	MP0051	357407615A			ABS (S.C.F.)
1.0 i -1.4 i - 1.4 i 16v - 1.6 i - 1.8 i - 1.8 i 16v - 1.9 D - 1.9 SDI/TDI - 1.9 TD - 2.0 i - 2.0 i 16 v	93-99	MP0144	357407613B			ABS
1.8 - 1.9 TDI - 2.0	93-99			MP0141	333501118	Right,ABS,disc brake
1.8 - 1.9 TDI - 2.0	93-99			MP0142	191501117A	Left,ABS,disc brake
Cordoba - Cordoba Station Wagon	03/99-07/02			MP0151	6X0501477	
Vario	->08/99	MP0144	357407613B			
Vario	93-99			MP0088	357501117	Drum brakes
Vario	93-99			MP0139	333501117A	Left, ABS, drum brakes
Vario	93-99			MP0140	191501118C	Right,ABS,drum brakes
Vario	93-99			MP0141	333501118	Right,ABS,disc brake
Vario	93-99			MP0142	191501117A	Left,ABS,disc brake
EXEO						
1.6	09-10	MP0259	4D0407625D			
1.6	09-10			MP0260	8E0598611	
1.8 T	08-10	MP0259	4D0407625D			
1.8 T	08-10			MP0260	8E0598611	
1.8 TSI	10-13	MP0259	4D0407625D			
1.8 TSI	10-13			MP0260	8E0598611	
2.0 TDI	08-13	MP0259	4D0407625D			
2.0 TDI	08-13			MP0260	8E0598611	
2.0 TFSI	09-13	MP0259	4D0407625D			
2.0 TFSI	09-13			MP0260	8E0598611	
EXEO ST						
1.6 - 1.8 T	09-10	MP0259	4D0407625D			
1.6 - 1.8 T	09-10			MP0260	8E0598611	
1.8 TSI	10-13	MP0259	4D0407625D			
1.8 TSI	10-13			MP0260	8E0598611	
2.0 TDI - 2.0 TFSI	09-13	MP0259	4D0407625D			
2.0 TDI - 2.0 TFSI	09-13			MP0260	8E0598611	

follow SEAT

MODELLO MODEL	ANNO YEAR	ANT CORAM FRONT CORAM	ANT ORIGINALE FRONT ORIGINAL	POST CORAM REAR CORAM	POST ORIGINALE REAR ORIGINAL	NOTE NOTES
FURA						
Tutti i tipi/All types/Tous types	82-86			MP0002	3981594	
IBIZA						
Tutti i tipi/All types/Tous types	02->			MP0171	6Q0598611	ABS 48 poles
1.0 - 1.3 - 1.6 - 1.8 - 1.9 - 2.0	93-06/99	MP0144	357407613B			ABS
1.0-1.3-1.6-1.8-1.9	93-06/99			MP0088	357501117	Drum brakes
1.0-1.3-1.6-1.8-1.9-2.0	->06/99	MP0050	357407615			
1.2-1.5-1.7-1.9		MP0143	SE138140304A			
dx-freni a disco-ABS	93->			MP0141	333501118	
dx-freni a tamburo-ABS				MP0140	191501118C	
I	11/84-05/93			MP0002	595948422	
III-IV	99-02/02			MP0151	6X0501477	
IV	02/02->	MP0170	6Q0407621AH			
sx-freni a disco-ABS				MP0142	191501117A	
sx-freni a tamburo-ABS	93->			MP0139	333501117A	
INCA						
Tutti i tipi/All types/Tous types	05/99-07/02			MP0207	6K9501477	Ch. 9K-X-023409->
1.4 i - 1.6 i - 1.7 D - 1.9 D/SDI	11/95->	MP0050	357407615			
1.4 i - 1.6 i - 1.7 D - 1.9 D/SDI	11/95->	MP0051	357407615A			ABS (S.C.F.)
1.4 i - 1.6 i - 1.7 D - 1.9 D/SDI	11/95->	MP0144	357407613B			ABS
LEON						
Tutti i tipi/All types/Tous types	11/99-07/02			MP0090	1J0501477A	
Tutti i tipi/All types/Tous types	00->	MP0150	1J0407613C			
1.0 TSI	15->	MP0234	1K0498621			
1.2 TSI - 1.6 TDI	10->	MP0234	1K0498621			
1.4 16V	06-12	MP0234	1K0498621			
1.4 TGI - 2.0 Cupra	13->	MP0234	1K0498621			
1.4 TSI - 1.8 TSI	07->	MP0234	1K0498621			
1.6 - 2.0 TDI 16V - 2.0 TFSI	05-12	MP0234	1K0498621			
1.6 LPG - 1.9 TDI - 2.0 Cupra R	09-12	MP0234	1K0498621			
1.9 TDI - 2.0 FSI	05-10	MP0234	1K0498621			
2.0 Cupra R	17->	MP0234	1K0498621			
2.0 TDI	05->	MP0234	1K0498621			

follow SEAT						
MODELLO MODEL	ANNO YEAR	ANT CORAM FRONT CORAM	ANT ORIGINALE FRONT ORIGINAL	POST CORAM REAR CORAM	POST ORIGINALE REAR ORIGINAL	NOTE NOTES
LEON ST						
1.0 TSI 1.2 TSI - 1.4 TGI - 1.6 TDI - 1.8 TSI - 2.0 Cupra - 2.0 TDI 1.4 TSI 1.6 TDI 4drive - 1.8 TSI 4drive - 2.0 TDI 4drive	15-> 13-> 12->	MP0234 MP0235 MP0236 MP0237	1K0498621 1K0498622 1K0498623 1K0498624			
MALAGA						
1.2 L/GL/GLX - 1.5 GLX - 1.7 D L/GL 903-1.2-1.5-1.7 D	11/84-12/93	MP0143	SE138140304A	MP0002	3981594	
MARBELLA						
Tutti i tipi/All types/Tous types	82-98	MP0006	3981586	MP0014	3981593	
PANDA						
Tutti i tipi/All types/Tous types Terra-Trans	80-85 83-93	MP0006 MP0006	3981586 3981586	MP0014	3981593	
RITMO						
Tutti i tipi/All types/Tous types	78-82			MP0002	595948422	
RONDA						
Tutti i tipi/All types/Tous types	06/82-11/88			MP0002	595948422	
TERRA						
903 Furgoneta	87-90	MP0006	3981586			

follow SEAT

MODELLO MODEL	ANNO YEAR	ANT CORAM FRONT CORAM	ANT ORIGINALE FRONT ORIGINAL	POST CORAM REAR CORAM	POST ORIGINALE REAR ORIGINAL	NOTE NOTES
TOLEDO						
Tutti i tipi/All types/Tous types	99->	MP0150	1J0407613C			
Tutti i tipi/All types/Tous types	04/99-07/02			MP0090	1J0501477A	
1.6 - 1.8 - 1.9 D/TDI	92-96			MP0088	357501117	Drum brakes
1.6i - 1.8 i - 1.8 16 v - 1.9 TD - 1.9 TDI - 2.0i - 2.0 i 16v	91-99	MP0050	357407615			
1.6i - 1.8 i - 1.8 16 v - 1.9 TD - 1.9 TDI - 2.0i - 2.0 i 16v	91-99	MP0051	357407615A			ABS (S.C.F.)
1.6i - 1.8 i - 1.8 16 v - 1.9 TD - 1.9 TDI - 2.0i - 2.0 i 16v	91-99	MP0144	357407613B			ABS
1.8 - 1.9 D/TDI	92-96			MP0139	333501117A	Left, ABS, drum brakes
1.8 - 1.9 D/TDI	92-96			MP0140	191501118C	Right, ABS, drum brakes
1.8 - 2.0	92-96			MP0141	191501118D	Right, ABS, disc brake
1.8 - 2.0	92-96			MP0142	191501117A	Reft, ABS, disc brake
dx-freni a disco-ABS	97-99			MP0141	333501118	
dx-freni a tamburo-ABS	97-99			MP0140	191501118C	
freni a tamburo	97-99			MP0088	357501117	
sx-freni a disco-ABS	97-99			MP0142	191501117A	
TOLEDO III						
1.4 16V	06-09	MP0234	1K0498621			
1.4 TSI - 1.8 TFSI	07-09	MP0234	1K0498621			
1.6 - 1.9 TDI - 2.0 FSI - 2.0 TDI - 2.0 TDI 16V	04-09	MP0234	1K0498621			
2.0 TFSI	05-09	MP0234	1K0498621			

SKODA

MODELLO MODEL	ANNO YEAR	ANT CORAM FRONT CORAM	ANT ORIGINALE FRONT ORIGINAL	POST CORAM REAR CORAM	POST ORIGINALE REAR ORIGINAL	NOTE NOTES
FABIA						
Tutti i tipi/All types/Tous types	12/99-10/01	MP0170	6Q0407621AH	MP0171	6Q0598611	Power steering, ABS 48 poles
FAVORITe FORMAN						
Tutti i tipi/All types/Tous types	->93	MP0145	115430010			
FELICIA						
1.3 - 1.6 - 1.9		MP0146	115430011			
OCTAVIA						
Tutti i tipi/All types/Tous types	09/96-07/02			MP0090	1J0501477A	

follow SKODA

MODELLO MODEL	ANNO YEAR	ANT CORAM FRONT CORAM	ANT ORIGINALE FRONT ORIGINAL	POST CORAM REAR CORAM	POST ORIGINALE REAR ORIGINAL	NOTE NOTES
OCTAVIA II						
1.2 TSI	10-13	MP0234	1K0498621			
1.4 - 1.6 - 2.0 TDI - 2.0 TDI 16V	04-13	MP0234	1K0498621			
1.4 TSI - 1.6 MultiFuel	08-13	MP0234	1K0498621			
1.6 FSI - 2.0 FSI	04-08	MP0234	1K0498621			
1.6 LPG	09-12	MP0234	1K0498621			
1.6 TDI	09-13	MP0234	1K0498621			
1.8 TSI	07-13	MP0234	1K0498621			
1.9 TDI	04-10	MP0234	1K0498621			
2.0 FSI 4x4	04-09	MP0234	1K0498621			
2.0 RS	05-13	MP0234	1K0498621			
2.0 TDI RS	06-13	MP0234	1K0498621			
OCTAVIA II Combi						
1.2 TSI - 2.0 TDI 16V 4x4	10-13	MP0234	1K0498621			
1.4 - 1.6 - 2.0 TDI 16V	04-13	MP0234	1K0498621			
1.4 TSI - 1.6 MultiFuel - 1.8 TSI 4x4	08-13	MP0234	1K0498621			
1.6 FSI - 2.0 FSI	04-08	MP0234	1K0498621			
1.6 LPG	09-12	MP0234	1K0498621			
1.6 TDI	09-13	MP0234	1K0498621			
1.8 TSI	07-13	MP0234	1K0498621			
1.9 TDI - 1.9 TDI 4x4	04-10	MP0234	1K0498621			
2.0 RS - 2.0 TDI	05-13	MP0234	1K0498621			
2.0 TDI RS - 2.0 TDI 4x4 - 2.0 TDI RS	06-13	MP0234	1K0498621			
OCTAVIA III						
1.0 TSI	16->	MP0234	1K0498621			
1.2 TSI	12-17	MP0234	1K0498621			
1.4 TSI - 1.6 TDI - 1.8 TSI - 2.0 TDI	12->	MP0234	1K0498621			
1.4 TSI G-TEC - 2.0 TDI / TDI RS 4x4 - 2.0 TDI RS - 2.0 TSI RS	13->	MP0234	1K0498621			
1.5 TSI - 2.0 TSI	17->	MP0234	1K0498621			
1.6	16->	MP0234	1K0498621			
1.6 TDI 4x4 - 1.8 TSI 4x4 - 2.0 TDI 4x4	14->	MP0234	1K0498621			
OCTAVIA III Combi						
1.0 TSI	16->	MP0234	1K0498621			
1.2 TSI	12-17	MP0234	1K0498621			
1.4 TSI - 1.6 TDI - 1.6 TDI 4x4 -1.8 TSI - 1.8 TSI 4x4 - 2.0 TDI - 2.0 TDI 4x4 - 2.0 TSI RS	12->	MP0234	1K0498621			
1.4 TSI G-TEC - 2.0 TDI RS	13->	MP0234	1K0498621			
1.5 TSI - 2.0 TSI	17->	MP0234	1K0498621			
1.6 - 2.0 TDI / TDI RS 4x4	14->	MP0234	1K0498621			

follow SKODA

MODELLO MODEL	ANNO YEAR	ANT CORAM FRONT CORAM	ANT ORIGINALE FRONT ORIGINAL	POST CORAM REAR CORAM	POST ORIGINALE REAR ORIGINAL	NOTE NOTES
SUPERB						
1.8 T - 2.0		MP0091	8D0407615B			
1.9 TDI - 2.5 V6 TDI - 2.8 V6		MP0089	4A0407615D			
YETI						
1.2 - 1.8 TSI 4x4 - 2.0 TDI - 2.0 TDI 4x4	09-17	MP0234	1K0498621			
1.4 TSI	10-17	MP0234	1K0498621			
1.4 TSI 4x4	15-17	MP0234	1K0498621			
1.6	14-17	MP0234	1K0498621			
1.6 TDI	10-15	MP0234	1K0498621			

SMART

MODELLO MODEL	ANNO YEAR	ANT CORAM FRONT CORAM	ANT ORIGINALE FRONT ORIGINAL	POST CORAM REAR CORAM	POST ORIGINALE REAR ORIGINAL	NOTE NOTES
CITY COUPE'						
Limited/1 - Passion - Pure	-> 02/02	MP0208	1870V021000000	MP0209	2072V009000000	
FORTWO Cabrio						
0.8 CDi - 1.0 - 1.0 Turbo	07->	MP0246	A4513300059			
1.0 Brabus	08->	MP0246	A4513300059			
1.0 Turbo Brabus	10->	MP0246	A4513300059			
electric drive	11->	MP0246	A4513300059			
electric drive Brabus	13->	MP0246	A4513300059			
FORTWO Coupé						
0.8 CDi - 1.0 - 1.0 Turbo	07->	MP0246	A4513300059			
1.0 Brabus	08->	MP0246	A4513300059			
1.0 Turbo Brabus	10->	MP0246	A4513300059			
electric drive	11->	MP0246	A4513300059			
electric drive Brabus	13->	MP0246	A4513300059			

TOYOTA

MODELLO MODEL	ANNO YEAR	ANT CORAM FRONT CORAM	ANT ORIGINALE FRONT ORIGINAL	POST CORAM REAR CORAM	POST ORIGINALE REAR ORIGINAL	NOTE NOTES
AVENSIS						
1.6 - 1.8 - 2.0D	10/00-04/03	MP0210	4350205020			
1.6 - 2.0 - 2.0 TD	->00	MP0210	4350205020			

follow TOYOTA

MODELLO MODEL	ANNO YEAR	ANT CORAM FRONT CORAM	ANT ORIGINALE FRONT ORIGINAL	POST CORAM REAR CORAM	POST ORIGINALE REAR ORIGINAL	NOTE NOTES
AYGO						
1.0	05->			MP0238	374885	
1.0 GPL	05-14			MP0238	374885	
1.4 Hdi	05-10			MP0238	374885	
CARINA						
E 1.6-2.0	92->	MP0147	4350220131			
CELICA						
01:08	12/99-11/02	MP0210	43502-05020			
COROLLA						
1.3-1.6	06/97-12/99	MP0148	4350212090			
1.4 - 1.8 TS - 2.0D-4D	02/02->	MP0211	4350202021			
YARIS						
Tutti i tipi/All types/Tous types	01/99-12/02			MP0212	4241052020	without ABS
1.0 - 1.3 - 1.4 - 1.5		MP0213	435020D010			
1.0 16V	99-05			MP0224	42450-0D010	with ABS
1.0 VVT-i	05-11			MP0239	42450-0D050	with ABS
1.3	02-05			MP0224	42450-0D010	with ABS
1.3 16V	99-05			MP0224	42450-0D010	with ABS
1.3 VVT-i	05-10			MP0239	42450-0D050	with ABS
1.33 VVT-i	08-11			MP0239	42450-0D050	with ABS
1.4 D-4D	05-12			MP0239	42450-0D050	with ABS
1.4 D-4D / 1.5 VVT-i TS	01-05			MP0224	42450-0D010	with ABS
1.8 VVTi	07-11			MP0239	42450-0D050	with ABS
YARIS VERSO						
01:05	00-05			MP0224	42450-0D010	with ABS
1.3	99-05			MP0224	42450-0D010	with ABS
1.4 D-4D	01-05			MP0224	42450-0D010	with ABS

VOLKSWAGEN

MODELLO MODEL	ANNO YEAR	ANT CORAM FRONT CORAM	ANT ORIGINALE FRONT ORIGINAL	POST CORAM REAR CORAM	POST ORIGINALE REAR ORIGINAL	NOTE NOTES
BORA						
Tutti i tipi/All types/Tous types	10/98-07/02			MP0090	1J0501477A	
1.6 - 1.8 - 1.9 - 2.3 - 2.8		MP0150	1J0407613C			

follow VOLKSWAGEN

MODELLO MODEL	ANNO YEAR	ANT CORAM FRONT CORAM	ANT ORIGINALE FRONT ORIGINAL	POST CORAM REAR CORAM	POST ORIGINALE REAR ORIGINAL	NOTE NOTES
CADDY						
Caddy	83-92			MP0168	4A0501117A	Drum brakes
Caddy II	01/99-07/02			MP0207	6K9501477	
Caddy III	04->	MP0172	1T0498621			
CADDY III Cassone						
1.2 TSI	10-15	MP0234	1K0498621			
1.4 - 2.0 SDI	04-10	MP0234	1K0498621			
1.6	04-15	MP0234	1K0498621			
1.6 BiFuel	11-15	MP0234	1K0498621			
1.6 TDI	05-15	MP0234	1K0498621			
1.9 TDI	05-10	MP0234	1K0498621			
2.0	06-15	MP0234	1K0498621			
2.0 TDI	07-15	MP0234	1K0498621			
CADDY III MPV						
1.2 TSI	10-15	MP0234	1K0498621			
1.4 - 1.9 TDI - 2.0 SDI	04-10	MP0234	1K0498621			
1.6	04-15	MP0234	1K0498621			
1.6 BiFuel	11-15	MP0234	1K0498621			
1.6 TDI - 2.0 TDI 16V - 2.0 TDI 16V 4motion - 2.0 TDI 4motion	10-15	MP0234	1K0498621			
1.9 TDI 4motion	08-10	MP0234	1K0498621			
2.0 EcoFuel	06-15	MP0234	1K0498621			
2.0 TDI	07-15	MP0234	1K0498621			
CORRADO						
Tutti i tipi/All types/Tous types	->92			MP0088	357501117	Drum brakes
Tutti i tipi/All types/Tous types	84-95			MP0141	191501118D	Right, ABS, disc brake
Tutti i tipi/All types/Tous types	84-95			MP0142	191501117A	Left, ABS,disc brake
DERBY						
Tutti i tipi/All types/Tous types	75-94	MP0047	861407615 A			
FOX						
1.2 - 1.4 - 1.4 TDI	05>	MP0232	5Z0407615			

follow VOLKSWAGEN

MODELLO MODEL	ANNO YEAR	ANT CORAM FRONT CORAM	ANT ORIGINALE FRONT ORIGINAL	POST CORAM REAR CORAM	POST ORIGINALE REAR ORIGINAL	NOTE NOTES
GOLF						
Tutti i tipi/All types/Tous types	->83			MP0046	357501117A	
1.0 - 1.3 - 1.4 - 1.6 - 1.6 D/TD - 1.8 - 1.8 GTI - 1.8 GTI 16v - 1.8i - 1.8 Syncro	11/83-10/91	MP0050	357407615			
1.0 - 1.3 - 1.4 - 1.6 - 1.6 D/TD - 1.8 - 1.8 GTI - 1.8 GTI 16v - 1.8i - 1.8 Syncro	11/83-10/91	MP0051	357407615A			ABS (S.C.F.)
1.0 - 1.3 - 1.4 - 1.6 - 1.6 D/TD - 1.8 - 1.8 GTI - 1.8 GTI 16v - 1.8i - 1.8 Syncro	11/83-10/91	MP0144	357407613B			ABS
1.0 - 1.3 - 1.6 - 1.6 D/TD - 1.8 - 1.8 GTI - 1.8 GTI 16v - 1.8i - 1.8 Syncro	01/84-12/87	MP0049	191407615			
1.1C-1.6 D-1.1 GL-1.3GL-1.6 GTD-1.5 D-1.6 TD-1.6 GTI-1.8 GTI-GL Formel E	->83	MP0048	175407615			
1.9 D/TD - 1.9 GTD - 1.9 SDI - 1.9 TDI - 2.0 - 2.0 GT	11/91-4/99	MP0050	357407615			
1.9 D/TD - 1.9 GTD - 1.9 SDI - 1.9 TDI - 2.0 - 2.0 GT	11/91-4/99	MP0051	357407615A			ABS (S.C.F.)
1.9 D/TD - 1.9 GTD - 1.9 SDI - 1.9 TDI - 2.0 - 2.0 GT	11/91-4/99	MP0144	357407613B			ABS
1.9 TDI GT-2.0 GTI-2.8 VR6 - 2.9 VR6	->07/97	MP0149	1H0407613B			
2.0 4 motion Highline - 2.3 V5 4 motion Highline - 2.8 V6 4 motion Highline	08/97-11/03	MP0150	1J0407613C	MP0150	1J0407613C	
2.3 V5 4 motion	05/99->	MP0089	4A0407615D			Automatic transmission
dx-freni a disco-ABS	84-98			MP0141	333501118	
dx-freni a tamburo-ABS	89-98			MP0140	333501118A	
freni a tamburo	08/88-07/92			MP0088	357501117	
Golf V	04->	MP0172	1T0498621	MP0173	1K0501611E	ABS 48 poles
IV ABS	08/97-07/02			MP0090	1J0501477A	
R32 - 1.4 - 1.6 - 1.6 TD - 1.8 - 1.8 GTI - 1.9 TDI- 2.0 -2.3 V5 - 2.8 V6	08/97-11/03	MP0150	1J0407613C			
sx-freni a disco-ABS	84-98			MP0142	191501117A	
sx-freni a tamburo-ABS	89-98			MP0139	333501117A	
VARIANT dx e sx	->04/99			MP0088	357501117	
GOLF PLUS V						
1.2 TSI - 1.6 BiFuel - 1.6 TDI	09-13	MP0234	1K0498621			
1.4 16V - 1.6 - 2.0 TDI - 2.0 TDI 16V	05-13	MP0234	1K0498621			
1.4 FSI	05-06	MP0234	1K0498621			
1.4 TSI	06-13	MP0234	1K0498621			
1.6 FSI	04-08	MP0234	1K0498621			
1.6 MultiFuel	07-13	MP0234	1K0498621			
1.9 TDI	05-09	MP0234	1K0498621			
2.0 FSI	05-08	MP0234	1K0498621			
GOLF V						
1.4 16V - 1.6 FSI - 1.9 TDI - 2.0 TDI - 2.0 TDI 16V	03-08	MP0234	1K0498621			
1.4 FSI	03-06	MP0234	1K0498621			
1.4 TSI - 2.0 - 3.2 R32 4motion	05-08	MP0234	1K0498621			
1.6 - 1.9 TDI 4motion - 2.0 FSI - 2.0 FSI 4motion - 2.0 SDI - 2.0 TDI 16V 4motion	04-08	MP0234	1K0498621			
1.6 MultiFuel - 2.0 TDI 4motion	07-08	MP0234	1K0498621			
2.0 GTI	04-09	MP0234	1K0498621			

follow VOLKSWAGEN

MODELLO MODEL	ANNO YEAR	ANT CORAM FRONT CORAM	ANT ORIGINALE FRONT ORIGINAL	POST CORAM REAR CORAM	POST ORIGINALE REAR ORIGINAL	NOTE NOTES
GOLF VI						
1.2 TSI - 1.4 - 1.4 TSI - 1.6 - 1.6 MultiFuel 2.0 TDI	08-12	MP0234	1K0498621			
1.6 BiFuel - 1.6 TDI - 2.0 TDI 4motion	09-12	MP0234	1K0498621			
1.8 TSI	09-11	MP0234	1K0498621			
2.0 Gti - 2.0 R 4motion	09-13	MP0234	1K0498621			
GOLF VII						
1.0 TSI	15-18	MP0234	1K0498621			
1.2 TSI - 1.4 TSI - 1.6 TDI - 1.6 TDI 4motion - 2.0 TDI - 2.0 TDI 4motion	12->	MP0234	1K0498621			
1.4 GTE Hybrid - 1.6	14->	MP0234	1K0498621			
1.4 TGI CNG - 1.4 TSI MultiFuel - 2.0 GTD - 2.0 GTI - 2.0 R 4motion	13->	MP0234	1K0498621			
1.5 TSI	17->	MP0234	1K0498621			
2.0 GTI Clubsport	16-17	MP0234	1K0498621			
2.0 GTI Clubsport S	16->	MP0234	1K0498621			
e-Golf	14-17	MP0234	1K0498621			
GOLF VII Variant						
1.0 TSI - 2.0 R 4 motion	15-18	MP0234	1K0498621			
1.2 TSI - 1.4 TSI - 1.4 TSI MultiFuel - 1.6 TDI - 1.6 TDI 4motion - 2.0 TDI -	13-17	MP0234	1K0498621			
1.4 TGI CNG - 2.0 GTD - 2.0 GTI - 2.0 R 4motion	13->	MP0234	1K0498621			
1.5 TSI	17->	MP0234	1K0498621			
1.6	14-17	MP0234	1K0498621			
2.0 GTD	15-17	MP0234	1K0498621			
2.0 TDI 4motion	13-18	MP0234	1K0498621			
JETTA						
Tutti i tipi/All types/Tous types	84-98			MP0141	191501118D	Right, ABS, disc brake
Tutti i tipi/All types/Tous types	84-98			MP0142	191501117A	Left, ABS, freni a disco
Tutti i tipi/All types/Tous types	89-98			MP0139	333501117A	Right, ABS, drum brakes
Tutti i tipi/All types/Tous types	89-98			MP0140	191501118C	Left, ABS, drum brakes
Tutti i tipi/All types/Tous types	->11/83			MP0046	357501117A	
Tutti i tipi/All types/Tous types	79-98			MP0088	357501117	Drum brake
1.1 - 1.3 - 1.6 - 1.6 D/TD	->11/83	MP0048	175407615			
1.3-1.6-1.6 D-1.6 TDC-1.6 TD CL-1.6 TDGL-1.8 GT-1.8 Carat	->07/87	MP0049	191407615			
1.3-1.6-1.6 D-1.6 TDC-1.6 TD CL-1.6 TDGL-1.8 GT-1.8 Carat	08/87->	MP0050	357407615			
JETTA III						
1.6	04-10	MP0234	1K0498621			
2.0 TFSI	05-10	MP0234	1K0498621			

follow VOLKSWAGEN

MODELLO MODEL	ANNO YEAR	ANT CORAM FRONT CORAM	ANT ORIGINALE FRONT ORIGINAL	POST CORAM REAR CORAM	POST ORIGINALE REAR ORIGINAL	NOTE NOTES
LUPO						
1.0-1.4 - 1.4 16v - 1.6 GTI - 1.7 SDI - 1.7	04/98-07/02			MP0151	6X0501477	
1.0-1.4 16v -1.7 SDI ABS		MP0152	6N0407613			
1.2 TDI 3L	07/99-07/02			MP0169	6E0598611	ABS 48 poles
NEW BEETLE						
1.9 TDI-2.0		MP0150	1J0407613C	MP0090	1J0501477A	
PASSAT						
Tutti i tipi/All types/Tous types	85-97			MP0142	191501117A	Left, ABS, disc brake
Tutti i tipi/All types/Tous types	85-97			MP0141	191501118D	Right, ABS, disc brake
Tutti i tipi/All types/Tous types	74-97			MP0088	357501117	Drum brakes
1.6 CL - 1.6- 1.9 TD CL-1.9 TD GL-1.8 CL-1.8 GL-1.8 Gli-1.8 GT-1.8 G60-2.0 Gli-2.0 GT	04/88-07/93	MP0050	357407615			
1.6 CL-1.6-1.9 TD CL-1.9 TD GL-1.8 CL-1.8 GL-1.8 Gli-1.8 GT-1.8 G60-2.0 Gli-2.0 GT ABS+cor.fon.		MP0144	357407613B			ABS+cor.fon.
1.6 D GL-1.6 GL-1.6 GT-1.6 TD GL - 2.0 GT	08/84-03/88	MP0041	823407615A			
1.6-1.8-1.8 T - 2.0 Highline - 2.5 TDI V6 Highline	08/96->	MP0091	8D0407615B			
1.9 TDI - 2.0 Comfortline Variant - 2.0 Highline 4 motion - 2.5 TDI V6 Highline 4 motion	08/96->	MP0089	4A0407615D			
2.0 GLI-2.0 GT	08/93-07/96	MP0149	1H0407613B			ABS
2.8 V6 Highline 4 motion - 4.0 W8 4 motion	08/96->	MP0089	4A0407615D			
4.0 W8 4motion	01-04	MP0259	4D0407625D			
ABS	09/87-12/91	MP0051	357407615A			ABS (S.C.F.)
dx-freni a tamburo-ABS	88-97			MP0140	333501118A	
per fr. Tamburo >mod.1986 - mod.1987>	08/84-03/88	MP0046	357501117A			
sx-freni a tamburo-ABS	88-97			MP0139	333501117A	
PASSAT Variant						
4.0 W8 4motion	01-04	MP0259	4D0407625D			
POLO						
Tutti i tipi/All types/Tous types	->81			MP0046	357501117A	
Tutti i tipi/All types/Tous types	07/99-09/01			MP0151	6X0501477	
Tutti i tipi/All types/Tous types	75-00			MP0088	357501117	Drum brakes
1.0 - 1.2 - 1.3 - 1.4 - 1.4 16v - 1.4 D/TDI - 1.7 SDI - 1.9 D/TDI - 1.9 SDI	10/01 - 07/02	MP0170	6Q0407621AH			ABS 48 poles
1.0 - 1.3 - 1.4 16v - 1.4 TDI - 1.6 - 1.6 GTI - 1.9D - 1.9 SDI	95-09/01	MP0152	6N0407613			ABS
1.4 16 v - 1.6 Variant - 1.9 SDI/TDI Variant	09/94-09/01	MP0144	357407613B			ABS
900 - 1100 - 1300 - 1.0 - 1.1 - 1.3 - 1.4 D	->94	MP0047	861407615A			
dx-freni a disco-ABS	95-00			MP0141	333501118	
dx-freni a tamburo-ABS	95-00			MP0140	333501118A	
sx-freni a disco-ABS	95-00			MP0142	191501117A	
sx-freni a tamburo-ABS	95-00			MP0139	333501117A	
t. -> 9N-2-000001->	10/01-07/02			MP0171	6Q0598611	ABS 48 poles

follow VOLKSWAGEN

MODELLO MODEL	ANNO YEAR	ANT CORAM FRONT CORAM	ANT ORIGINALE FRONT ORIGINAL	POST CORAM REAR CORAM	POST ORIGINALE REAR ORIGINAL	NOTE NOTES
POLO Tre volumi						
1.9 SDI	05>	MP0232	5Z0407615			
SANTANA						
Tutti i tipi/All types/Tous types	74-88	MP0041	823407615A			
SCIROCCO						
Tutti i tipi/All types/Tous types	74-92	MP0048	175407615			Except KR-PG-9A-2E-ADY
Tutti i tipi/All types/Tous types	89-95	MP0050	357407615			KR-PG-9A-2E-ADY
SHARAN						
1.8 T - 2.0 Comfortline - 2.8 V6 Highline	08/00->	MP0153	7M0501655			
1.9 TDI-1.9 TDI GL-1.9 TDI CL-2.0-2.0 CL-2.0 GL-2.8 VR6-2.8 VR6 GL	->07/00	MP0153	7M0501655	MP0153	7M0501655	
SPORTSVAN VII						
1.0 TSI	15->	MP0234	1K0498621			
1.2 TSI - 1.4 TSI - 1.4 TSI MultiFuel - 1.6 - 1.6 TDI	14->	MP0234	1K0498621			
1.5 TSI	17->	MP0234	1K0498621			
2.0 TDI	14-17	MP0234	1K0498621			
TOURAN						
Tutti i tipi/All types/Tous types	04->	MP0172	1T0498621			ABS, 48 poles
VENTO						
Tutti i tipi/All types/Tous types	79-98			MP0088	357501117	Drum brake
Tutti i tipi/All types/Tous types	84-98			MP0141	191501118D	Right, ABS , disc brake
Tutti i tipi/All types/Tous types	84-98			MP0142	191501117A	Left, ABS, disc brake
Tutti i tipi/All types/Tous types	89-98			MP0139	333501117A	Left, ABS, drum brakes
Tutti i tipi/All types/Tous types	89-98			MP0140	191501118C	Right, ABS, drum brakes
1.4 CL-1.4 GL-1.6 CL-1.6 GL-1.8 GL-1.8 GT 1.9 D CL-1.9 DGL-1.9 TD CL-1.9 TD GL-1.9 TD GT-1.9 TDI GL-1.9 TDI GT-2.0 CL-2.0 GL	->06/95	MP0050	357407615			
1.4 CL-1.4 GL-1.6 CL-1.6 GL-1.8 GL-1.8 GT-1.9 D CL-1.9 DGL-1.9 TD CL-1.9 TD GL-1.9 TD GT-1.9 TDI GL-1.9 TDI GT-2.0 CL-2.0 GL ABS+cor-fon.	->06/95	MP0144	357407613B			ABS
2.0 GT-2.8 VR6	->06/95	MP0149	1H0407613B			

VOLVO						
MODELLO MODEL	**ANNO YEAR**	**ANT CORAM FRONT CORAM**	**ANT ORIGINALE FRONT ORIGINAL**	**POST CORAM REAR CORAM**	**POST ORIGINALE REAR ORIGINAL**	**NOTE NOTES**
440						
1.7-T 440 ABS	 90-96 89-96	MP0154	3455827	 MP0155 MP0156	 3472719 VKBA1437	 ABS, 44 teeth
460						
Tutti i tipi/All types/Tous types 1.7-T ABS	90-96 90-96	 MP0154	 3455827	MP0155 MP0156	3472719 VKBA1437	 ABS, 44 teeth
480						
Tutti i tipi/All types/Tous types 1.7-T ABS	90-96 89-96	 MP0154	 3455827	MP0155 MP0156	3472719 VKBA1437	 t. 567103> ABS, 44 teeth
740						
Tutti i tipi/All types/Tous types 2.0 DACT 16V Turbo ABS	88-92 90-91 89-92	MP0157 MP0159 MP0159	271394 1359818 1359818			 ABS 48 teeth
760						
Tutti i tipi/All types/Tous types ABS ABS	88-90 89-90 88	MP0157 MP0159 MP0158	271394 1359818 271449			 ABS 48 teeth ABS 96 denti
780						
Tutti i tipi/All types/Tous types Tutti i tipi/All types/Tous types	88 89-90	MP0158 MP0159	271449 1359818			
850						
Tutti i tipi/All types/Tous types Tutti i tipi/All types/Tous types AWD	91-93 94-97 96-97	MP0160 MP0161 MP0161	271585 271786 271786			

follow VOLVO

MODELLO MODEL	ANNO YEAR	ANT CORAM FRONT CORAM	ANT ORIGINALE FRONT ORIGINAL	POST CORAM REAR CORAM	POST ORIGINALE REAR ORIGINAL	NOTE NOTES
940						
Tutti i tipi/All types/Tous types	91-94	MP0157	271394			
2.0 Turbo	91-94	MP0159	1359818			ABS 48 teeth
2.3 Turbo	93-95	MP0159	1359818			
ABS	91-94	MP0159	1359818			
960						
Tutti i tipi/All types/Tous types	91-94	MP0157	271394			
Tutti i tipi/All types/Tous types	95-97	MP0162	271905			
ABS	91-94	MP0159	1359818			ABS 48 teeth
C70						
Tutti i tipi/All types/Tous types	97-98	MP0161	271786			
AWD	97-98	MP0161	271786			
S 90-V 90						
Tutti i tipi/All types/Tous types	97-98	MP0162	271905			
S40-V 40						
1.6-1.9 Td-2.0	->03/00	MP0163	30855922			
S70-V 70						
Tutti i tipi/All types/Tous types	97-98	MP0161	271786			
AWD	97-98	MP0161	271786			

ZASTAVA

MODELLO MODEL	ANNO YEAR	ANT CORAM FRONT CORAM	ANT ORIGINALE FRONT ORIGINAL	POST CORAM REAR CORAM	POST ORIGINALE REAR ORIGINAL	NOTE NOTES
YUGO						
45-55	81-90			MP0002	4344535	
ZASTAVA 600						
600 D				MP0016	1612961	
ZASTAVA 750						
Tutti i tipi/All types/Tous types				MP0016	1612961	

CORAM	APPLICATION	O.E.	RIF. SKF	RIF. SNR	RIF. IRB	RIF. OMCAR	RIF. LORETT
MP0001	AUTOBIANCHI	4214408	VKBA627	R158.089	K-30/32	301	C148
MP0001	AUTOBIANCHI	4267990	VKBA627	R158.089	K-30/32	301	C148
MP0001	AUTOBIANCHI	4341664	VKBA627	R158.089	K-30/32	301	C148
MP0001	FIAT	4214408	VKBA627	R158.089	K-30/32	301	C148
MP0001	FIAT	4341664	VKBA626	R158.089	K-30/32	301	C148
MP0001	FIAT	4267990	VKBA626	R158.089	K-30/32	301	C148
MP0001	FIAT/LANCIA	5888279	VKBA626	R158.089	K-30/32	301	C148
MP0001	FIAT/LANCIA	5888279	BA2B633200C	R158.089	K-30/32	301	C148
MP0001	FIAT/LANCIA	4340061	BA2B633200C	R158.089	K-30/32	301	C148
MP0002	AUTOBIANCHI/ZASTAVA	5948422	VKBA625	R158.10	K-36/38	300	C190
MP0002	AUTOBIANCHI/ZASTAVA	4379767	VKBA940	R158.10	K-36/38	300	C190
MP0002	AUTOBIANCHI/ZASTAVA	4399856	VKBA940	R158.10	K-36/38	300	C190
MP0002	FIAT/LANCIA	7599661	BA2B633265	R158.17	K-36/38	300	C190
MP0002	FIAT/LANCIA/ZASTAVA	7599461	BA2B633265	R158.10	K-36/38	300	C190
MP0002	FIAT/LANCIA/ZASTAVA	4344535	BAFB633622	R158.17	K-36/38	300	C190
MP0002	FIAT/LANCIA/ZASTAVA	4381043	BA2B633265	R158.17	K-36/38	300	C190
MP0002	SAAB	595948422	BA2B633265	R158.17	K-36/38	300	C190
MP0002	SAAB/SEAT	3981594	BA2B633265	R158.17	K-36/38	300	C190
MP0002	SAAB/SEAT	SE021149002A	BA2B633265	R158.17	K-36/38	300	C190
MP0003	AUTOBIANCHI	4399777				350	CR1751
MP0003	AUTOBIANCHI	4260431				350	CR1751
MP0003	AUTOBIANCHI	7578589				350	CR1751
MP0003	FIAT	7578589				350	CR1751
MP0003	FIAT	4399039				350	CR1751
MP0003	FIAT/LANCIA	4260431				350	CR1751
MP0003	FIAT/LANCIA	4399777				350	CR1751
MP0006	AUTOBIANCHI	4400918	VKBA734	R158.13	IR-8059	500	C157
MP0006	FIAT/LANCIA	4400918	VKBA734	R158.13	IR-8059	190	C157
MP0006	SEAT	3981586	VKBA734	R158.13	IR-8059	190	C157
MP0006	SEAT	SE028140301A	VKBA734	R158.13	IR-8059	190	C157
MP0007	FIAT/LANCIA	7634577				351	CR1754
MP0007	FIAT/LANCIA	7591328				351	CR1754
MP0007	FIAT/LANCIA	4390949				351	CR1754
MP0008	FIAT/LANCIA	5955456				354	CR1743
MP0014	FIAT	4400919	VKBA310	R158.14	IR-8060	501	C158
MP0014	FIAT	4400919	VKBA310	R158.14	IR-8060	191	C158
MP0014	SEAT	3981593	VKBA310	R158.14	IR-8060	191	C158
MP0014	SEAT	SE028160302A	VKBA310	R158.14	IR-8060	191	C158

CORAM	APPLICATION	O.E.	RIF. SKF	RIF. SNR	RIF. IRB	RIF. OMCAR	RIF. LORETT
MP0015	FIAT/LANCIA	82377953				314	CR1746
MP0015	FIAT/LANCIA	7617175				314	CR1746
MP0016	ZASTAVA	1612961				316	
MP0017	FIAT	4459689		R157.27		302	CR1750
MP0018	AUTOBIANCHI	5963034	VKBA1443	R158.29		189	
MP0018	FIAT	7538260	VKBA1443	R158.29		189	
MP0019	FIAT	5927842				192	
MP0020	FIAT/LANCIA	7634577				351	CR1754
MP0020	FIAT/LANCIA	7591328				351	CR1754
MP0020	FIAT/LANCIA	4390949				351	CR1754
MP0021	FIAT/LANCIA	7608131				352	CR1779
MP0022	ALFA	7645817				232	CR1781
MP0022	ALFA	60800548				232	CR1781
MP0022	ALFA	60801750				232	CR1781
MP0022	FIAT	82433787				232	CR1781
MP0022	FIAT	82390272				232	CR1781
MP0022	FIAT	60751504				232	CR1781
MP0022	FIAT	7595521				232	CR1781
MP0022	FIAT/LANCIA	7667265				232	CR1781
MP0023	AUTOBIANCHI	7578589				350	
MP0023	FIAT	7578589				350	CR1751
MP0023	FIAT	4399039				350	CR1751
MP0023	FIAT/LANCIA	4260431				350	CR1751
MP0023	FIAT/LANCIA	4399777				350	CR1751
MP0024	FIAT/LANCIA	7634578				353	CR1822
MP0024	FIAT/LANCIA	7643294				353	CR1822
MP0024	FIAT/LANCIA	7641577				353	CR1822
MP0025	FIAT	7641450				355	
MP0026	FIAT/LANCIA	82438592		R158.26		311	CR1769
MP0027	ALFA/FIAT	60809985	VKBA1440	R158.22	IR-8505	312	C198
MP0027	ALFA/FIAT	7750120	VKBA1440	R158.22	IR-8505	312	C198
MP0027	ALFA/FIAT	60812195	VKBA1440	R158.22	IR-8505	312	C198
MP0027	ALFA/FIAT	46453887	VKBA1440	R158.22	IR-8505	312	C198
MP0027	ALFA/FIAT	7603679	VKBA1440	R158.22	IR-8505	312	C198
MP0027	FIAT	7645817	VKBA1440	R158.22	IR-8505	312	C198
MP0027	FIAT	46554135	VKBA1440	R158.22	IR-8505	312	C198
MP0028	FIAT/LANCIA	82403117	VKBA1303	R158.20	IR-8098	305	C187
MP0028	FIAT/LANCIA	60808829	633555	R158.20	IR-8098	305	C187

CORAM	APPLICATION	O.E.	RIF. SKF	RIF. SNR	RIF. IRB	RIF. OMCAR	RIF. LORETT
MP0028	LANCIA	60751141	633555	R158.20	IR-8098	305	C187
MP0028	LANCIA	60751816	633555	R158.20	IR-8098	305	C187
MP0028	LANCIA	82400997	633555	R158.20	IR-8098	305	C187
MP0029	ALFA	7732410	VKBA1441	R158.21	K-34/24	313	C201
MP0029	ALFA	46425959	VKBA1441	R158.21	K-34/24	313	C201
MP0029	ALFA	60806445	VKBA1441	R158.21	K-34/24	313	C201
MP0029	FIAT	60809721	VKBA1441	R158.21	K-34/24	313	C201
MP0029	FIAT	7613514	VKBA1441	R158.21	K-34/24	313	C201
MP0029	FIAT	60811481	VKBA1441	R158.21	K-34/24	313	C201
MP0030	FIAT/LANCIA	82400997	VKBA1304	R158.19		306	C186
MP0030	FIAT/LANCIA	60807234	VKBA1304	R158.19		306	C186
MP0030	FIAT/LANCIA	82469083	VKBA1304	R158.19		306	C186
MP0031	ALFA	82441470	VKBA1476	R158.33		307	C191
MP0031	ALFA /FIAT/LANCIA	82462175	VKBA1476	R158.33		307	C191
MP0031	ALFA /FIAT/LANCIA	60808903	VKBA1476	R158.33		307	C191
MP0032	FIAT/LANCIA	7603485	VKBA940	R158.17	K-36/38	310	
MP0033	ALFA/FIAT	7750120	VKBA1440	R158.22	IR-8505	312	C198
MP0033	ALFA/FIAT	60812195	VKBA1440	R158.22	IR-8505	312	C198
MP0033	ALFA/FIAT	46453887	VKBA1440	R158.22	IR-8505	312	C198
MP0033	ALFA/FIAT	7603679	VKBA1440	R158.22	IR-8505	312	C198
MP0033	FIAT	7787124	VKBA1440	R158.22	IR-8505	312	C198
MP0033	FIAT	7645817	VKBA1440	R158.22	IR-8505	312	C198
MP0033	FIAT	46554135	VKBA1440	R158.22	IR-8505	312	C198
MP0034	CITROEN/PEUGEOT	330765				280	CR1948
MP0034	FIAT	1300472080				280	CR1948
MP0034	FIAT	1300472080				280	CR1951
MP0035	CITROEN/PEUGEOT	330766				281	CR1953
MP0035	FIAT	1307355080				281	CR1953
MP0039	ALFA	60501373				230	CR1715
MP0040	ALFA	60559321				231	CR1716
MP0041	AUDI/VOLKSWAGEN	823407615A				198	CR1701
MP0042	AUDI	893407615A				199	CR1702
MP0043	AUDI	893407615B				202	CR1940
MP0043	AUDI	8A0407615				202	CR1940
MP0044	AUDI	443407615A				205	CR1942
MP0045	AUDI	893407615D				204	CR1700
MP0045	AUDI	8A0407615C				204	
MP0046	AUDI/VOLKSWAGEN	357501117A				203	CR1705

CORAM	APPLICATION	O.E.	RIF. SKF	RIF. SNR	RIF. IRB	RIF. OMCAR	RIF. LORETT
MP0047	VOLKSWAGEN	861407615A				201	CR1939
MP0048	VOLKSWAGEN	175407615				195	CR1706
MP0049	VOLKSWAGEN	191407615				196	CR1707
MP0050	SEAT/VOLKSWAGEN	357407615				197	CR1708
MP0051	SEAT/VOLKSWAGEN	357407615A				200	CR1709
MP0056	FORD	1644842				250	CR1721
MP0057	FORD	6517014				251	CR1722
MP0058	FORD	1146119				252	CR1789
MP0058	FORD	3903036				252	CR1789
MP0058	FORD	6517013				252	CR1789
MP0060	LADA	21213103012				240	CR1917
MP0060	LADA	21213103014				240	CR1917
MP0061	LADA	21083103012				241	CR1918
MP0065	OPEL	326169				270	CR1710
MP0065	OPEL	326168				270	CR1710
MP0065	OPEL	326178				270	CR1710
MP0065	OPEL	326197				270	CR1710
MP0066	OPEL	326173				271	CR1711
MP0066	OPEL	326184				271	CR1711
MP0069	PEUGEOT	330749				210	CR1712
MP0073	RENAULT	7700628767				222	CR1713
MP0074	RENAULT	7700719140				220	CR1714
MP0075	RENAULT	7700768318				221	
MP0075	RENAULT	7700768319				221	CR1931
MP0076	RENAULT	7700715149				223	CR1957
MP0077	RENAULT	7700308572		TGB12095S43	IR-8106		
MP0077	RENAULT	7700787639		TGB12095S43	IR-8106		C576
MP0077	RENAULT	7700803928		TGB12095S43	IR-8106		C576
MP0077	RENAULT	7700809185		TGB12095S43	IR-8106		C576
MP0077	RENAULT	7704002262		TGB12095S43	IR-8106		C576
MP0078	FIAT	7746191				315	
MP0079	ALFA	60545087				360	
MP0079	FIAT/LANCIA	60809805				360	
MP0080	ALFA	60812057	VKBA3442	R158.39		318	
MP0080	FIAT/LANCIA	7769902	VKBA3442	R158.39		318	C219
MP0081	ALFA	60563372				357	
MP0081	ALFA	60653528				357	
MP0081	LANCIA	60563372				357	

CORAM	APPLICATION	O.E.	RIF. SKF	RIF. SNR	RIF. IRB	RIF. OMCAR	RIF. LORETT
MP0081	LANCIA	60653528				357	
MP0081	LANCIA	60816898				357	
MP0082	ALFA	60510369				356	
MP0082	ALFA	60510367				356	
MP0083	ALFA	60510129	VKBA1449	R160.16		308	
MP0084	ALFA	60568138	VKBA3436	R160.22		321	
MP0085	ALFA	60801644	VKBA1450	R160.17		309	
MP0085	ALFA	82469109	VKBA1450	R160.17		309	
MP0086	ALFA	60811032				233	
MP0086	ALFA	82466910				233	
MP0087	ALFA	60613615	VKBA3459			319	
MP0088	AUDI/SEAT/VOLKSWAGEN	357501117				208	
MP0089	AUDI	4A0407615F				194	
MP0089	AUDI	4A0407615D				194	
MP0090	AUDI/SKODA/VOLKSWAGEN	1J0501477A	VKBA3456		K-02/13	269	
MP0090	AUDI/SKODA/VOLKSWAGEN	1J0598477	VKBA3456		K-02/13	269	
MP0091	AUDI/VOLKSWAGEN	8D0407615B				265	
MP0091	AUDI/VOLKSWAGEN	8D0407615D				265	
MP0091	AUDI/VOLKSWAGEN	8D0407615E				265	
MP0092	BMW	31221139345	VKBA1458	R150.22	IR-8591	349	C382
MP0093	BMW	31211131297	VKBA890	R150.15	IR-8508	370	CR2114
MP0093	BMW	31211131297	VKBA938	R150.17	IR-8508	370	CR2114
MP0094	BMW	33411131118				348	
MP0095	CITROEN	330774				211	
MP0095	PEUGEOT	330762				211	CR1943
MP0096	CITROEN/PEUGEOT	330769				212	CR1944
MP0096	CITROEN/PEUGEOT	330771				212	CR1944
MP0096	CITROEN/PEUGEOT	330772				212	CR1944
MP0097	CITROEN	330764				214	CR1946
MP0097	CITROEN/LANCIA	1311508080				214	CR1946
MP0098	CITROEN/PEUGEOT	330776				215	CR1949
MP0099	CITROEN	330775				216	
MP0100	CITROEN	374830	VKBA1411	R166.21	K-07/21	217	
MP0101	ALFA	60809668				371	
MP0101	FIAT/LANCIA	82463292				371	
MP0102	FIAT	7522385				359	
MP0102	FIAT	46798592				359	
MP0103	FIAT	46447445				358	CR1777

CORAM	APPLICATION	O.E.	RIF. SKF	RIF. SNR	RIF. IRB	RIF. OMCAR	RIF. LORETT
MP0103	FIAT	82491391				358	CR1777
MP0104	FIAT	7717348				317	
MP0105	FIAT	7569715				278	CR1752
MP0106	FIAT	7657422				279	CR1824
MP0107	FORD	5027622	VKBA1482	R152.44	K-11/27	256	CR2681
MP0108	FORD	1078709				253	
MP0108	FORD	1121342				253	
MP0108	FORD	7201007				253	
MP0109	FORD	7346525				254	CR1927
MP0110	FORD	5027621	VKBA1481	R152.43	K-11/26	255	CR2680
MP0111	HYUNDAI	5175024500				323	
MP0112	HYUNDAI	5175029000				324	
MP0113	HYUNDAI	5175029100				325	
MP0114	HONDA	44600-SM4-020				335	
MP0115	HONDA	44600-S04-980				336	
MP0116	HONDA	44600-S04-A00				337	
MP0117	HONDA	44600-ST3-E00				338	
MP0118	ALFA	60809668				371	
MP0118	FIAT/LANCIA	82463292				371	
MP0119	MERCEDES	2013571708				346	
MP0120	MERCEDES	1243574608				347	
MP0121	NISSAN	402020M010				326	
MP0122	NISSAN	402024F100				327	
MP0123	NISSAN	402024F105				328	
MP0124	NISSAN	4020290J00				329	
MP0125	NISSAN	402022F000				330	
MP0126	OPEL	326185				272	
MP0127	OPEL	326194				274	
MP0128	OPEL	326196				273	CR1956
MP0129	OPEL	1604004	VKBA3422	R153.22		276	
MP0129	OPEL	1604307	VKBA3422	R153.22		276	
MP0129	OPEL	90468191	VKBA3422	R153.22		276	
MP0129	OPEL	421006	VKBA3422	R153.22		276	
MP0129	OPEL	1604303	VKBA3422	R153.22		276	
MP0129	OPEL	90511494	VKBA3422	R153.22		276	
MP0129	OPEL	90540262	VKBA3422	R153.22		276	
MP0130	OPEL	326195				275	
MP0131	RENAULT	7701204667	VKBA967	R155.25	K-29/32	320	

CORAM	APPLICATION	O.E.	RIF. SKF	RIF. SNR	RIF. IRB	RIF. OMCAR	RIF. LORETT
MP0131	RENAULT	7701204692	VKBA968	R155.39	K-29/32	320	
MP0131	RENAULT	7701204667	VKBA3438	R155.40	K-29/32	320	
MP0131	RENAULT	7701204692	VKBA3439	R155.41	K-29/32	320	
MP0131	RENAULT	7700803928	VKBA3439	R155.41	K-29/32	320	
MP0132	RENAULT	7700830220				224	
MP0133	RENAULT	7700415121				225	
MP0134	ROVER	EJP7459				333	
MP0135	ROVER	RUB101250				334	
MP0136	SAAB	8947384	VKBA746	R164.07		339	
MP0136	SAAB	8947384	VKBA943	R164.09		339	
MP0137	SAAB	8952996	VKBA913	R164.10		341	
MP0137	SAAB	8993875	VKBA913	R164.10		341	
MP0137	SAAB	8993883	VKBA913	R164.10		341	
MP0137	SAAB	8993891	VKBA913	R164.10		341	
MP0137	SAAB	8993909	VKBA913	R164.10		341	
MP0138	SAAB	8971095	VKBA914	R164.11		340	
MP0139	SEAT/VOLKSWAGEN	333501117A				379	
MP0140	SEAT/VOLKSWAGEN	191501118C				380	
MP0140	SEAT/VOLKSWAGEN	333501118A				380	
MP0141	SEAT	191501118D				381	
MP0141	SEAT/VOLKSWAGEN	333501118				381	
MP0142	SEAT/VOLKSWAGEN	191501117A				382	
MP0142	SEAT/VOLKSWAGEN	333501117				382	
MP0143	SEAT	SE138140304A				322	
MP0144	SEAT/VOLKSWAGEN	357407613B				206	
MP0145	SKODA	115430010				260	
MP0146	SKODA	115430011				261	
MP0146	SKODA	6U0407615A				261	
MP0147	TOYOTA	4350220131				331	
MP0148	TOYOTA	4350212090				332	
MP0149	VOLKSWAGEN	1H0407613B				209	
MP0150	AUDI/VOLKSWAGEN	1J0407613G				266	
MP0150	AUDI/VOLKSWAGEN	1J0407613C				266	
MP0151	SEAT	6X0598477				267	
MP0151	SEAT/VOLKSWAGEN	6X0501477				267	
MP0152	VOLKSWAGEN	6N0407613				207	CR1958
MP0153	SEAT	7M0501655				268	
MP0153	SEAT	7M0501655A				268	

CORAM	APPLICATION	O.E.	RIF. SKF	RIF. SNR	RIF. IRB	RIF. OMCAR	RIF. LORETT
MP0153	SEAT	7M0501655B				268	
MP0153	SEAT	7M0501655D				268	
MP0153	VOLKSWAGEN	7M0501655				268	
MP0154	VOLVO	3455827				342	
MP0155	VOLVO	3472719	VKBA1436	R165.10		343	
MP0156	VOLVO		VKBA1437	R165.15		376	CR2662
MP0157	VOLVO	271394	VKBA1313	R165.12		372	CR2234
MP0158	VOLVO	271449	VKBA1434	R165.13		378	
MP0158	VOLVO	271645	VKBA1434	R165.13		378	CR2236
MP0159	VOLVO	1359818	VKBA1435	R165.14		344	
MP0160	VOLVO	271585	VKBA3471	R165.18	K-40/22	373	
MP0160	VOLVO	271589	VKBA3471	R165.18	K-40/22	373	CR2255
MP0161	VOLVO	271786	VKBA3415	R165.17	K-40/18	374	CR2256
MP0161	VOLVO	271786	VKBA3488	R165.17	K-40/18	374	CR2256
MP0162	VOLVO	271905	VKBA3425		K-40/19	375	CR2257
MP0163	VOLVO	30855922				345	
MP0164	RENAULT	7700830220				226	
MP0165	ALFA	60815429	BAF0040			423	C256
MP0165	ALFA/FIAT	46519901	BAF0040			423	C256
MP0165	FIAT	46512973	BAF0040			423	C256
MP0165	LANCIA	46512973	BAF0040			423	C256
MP0165	LANCIA	46519901	BAF0040			423	C256
MP0166	ALFA	60652014	BAF0049	R16026		426	C259
MP0167	ALFA	60815160				404	CR1955
MP0167	ALFA	7788206				404	CR1955
MP0167	LANCIA	60815160				404	CR1955
MP0167	LANCIA	7788206				404	CR1955
MP0168	AUDI/VOLKSWAGEN	4A0501117A				383	
MP0168	AUDI/VOLKSWAGEN	8D0501117C				383	
MP0169	AUDI	6E0598611	VKBA3549	R15451		427	CR2567
MP0170	AUDI/SEAT/SKODA	6Q0407621AH	VKBA3569	R15732		418	
MP0170	AUDI/SEAT/SKODA	6Q0407621AJ	VKBA3569	R15732		418	
MP0171	AUDI/SKODA/VOLKSWAGEN	6Q0598611	VKBA3567	R15731		419	CR2558
MP0172	AUDI	1T0498621	VKBA3643			420	
MP0172	SEAT/VOLKSWAGEN	1T0498621	VKBA3643			420	
MP0173	AUDI	1K0501611E				428	
MP0173	AUDI	1K0598611				428	
MP0173	SEAT	1K0501611E				428	

CORAM	APPLICATION	O.E.	RIF. SKF	RIF. SNR	RIF. IRB	RIF. OMCAR	RIF. LORETT
MP0173	SEAT	1K0598611				428	
MP0174	BMW	33411093567				384	
MP0175	CHRYSLER	4641517	BARB636109E	R18601		385	
MP0175	CHRYSLER	4641517AD	BARB636109E	R18601		385	
MP0175	DODGE	4641517				385	
MP0175	DODGE	4641517AD				385	
MP0176	CITROEN	374828	VKBA3477	R15937		410	CR2667
MP0176	CITROEN/PEUGEOT	374843	VKBA3477	R15937		410	CR2667
MP0177	CITROEN	374836	VKBA3482	R15933		409	
MP0177	CITROEN	374844	VKBA3482	R15933		409	
MP0178	CITROEN/PEUGEOT	335028	VKBA3424	R15932	IR-8619	425	C222
MP0178	FIAT/LANCIA	1473543080	VKBA3424	R15932	IR-8619	425	C222
MP0178	FIAT/LANCIA	71714474	VKBA3424	R15932	IR-8619	425	C222
MP0178	FIAT/LANCIA	9567217780	VKBA3424	R15932	IR-8619	425	C222
MP0179	CITROEN	374829	VKBA3478	R16623		411	CR2575
MP0180	FIAT	46554135	VKBA3583	R15823		424	C443
MP0181	FIAT	46745258				432	
MP0182	FIAT	1328045080				405	
MP0183	FIAT	1328053080				431	
MP0184	FORD	4103347				386	
MP0185	MERCEDES	1683370345				413	
MP0186	MERCEDES	1683500035				387	
MP0186	MERCEDES	1683500335				387	
MP0187	MERCEDES	1683500435				388	
MP0188	MERCEDES	2103300325				414	
MP0189	MERCEDES	2033570008				389	
MP0190	MERCEDES	2113570308				390	
MP0191	MINI	33416756830				421	
MP0192	MINI	31226756889				422	
MP0193	NISSAN	402024M400				391	
MP0194	NISSAN	40204AX600				417	
MP0194	NISSAN	82000046549				417	
MP0195	OPEL	4707270				415	
MP0196	OPEL	4707271				416	
MP0197	OPEL	1603208	BAR0048	R15331		393	
MP0198	OPEL	1603210	BAR0053B	R15330		394	
MP0199	OPEL	1604005	VKBA3514	R15334		395	
MP0200	OPEL	326001				392	

MOZZI RUOTA
WHEEL HUBS
MOYEUX DE ROUE
LISTA DI COMPARAZIONE – CROSS REFERENCES – REFERENCES CROISEES

CORAM	APPLICATION	O.E.	RIF. SKF	RIF. SNR	RIF. IRB	RIF. OMCAR	RIF. LORETT
MP0201	PEUGEOT	374835	VKBA3454	R15936		412	
MP0202	RENAULT	7700840156				396	
MP0203	RENAULT	8200003026				397	
MP0204	RENAULT	7701205170	VKBA3491	R15556		406	
MP0205	ROVER	RFB000170				398	
MP0205	ROVER	EFP7567				398	
MP0206	SAAB	4107462	VKBA1408	R164.13		377	C533
MP0207	SEAT/VOLKSWAGEN	6K9501477		R182.61		408	
MP0208	SMART	1870V021000000				399	
MP0209	SMART	2072V009000000	BAR0051			400	
MP0210	TOYOTA	4350205020				401	
MP0210	TOYOTA	4350205021				401	
MP0210	TOYOTA	4350232080				401	
MP0211	TOYOTA	4350202021				402	
MP0212	TOYOTA	4241052020	VKBA3930			407	
MP0212	TOYOTA	4241052021	VKBA3930			407	
MP0213	TOYOTA	435020D010				403	
MP0213	TOYOTA	4350252010				403	
MP0214	LADA						
MP0215	CITROEN/PEUGEOT	3701.42	BAFB444450BB	TGB12894			C405
MP0215	CITROEN/PEUGEOT	95496146	BAFB444450BB	TGB12894			C405
MP0215	CITROEN/PEUGEOT	9558882680	BAFB444450BB	TGB12894			C405
MP0216	FIAT	97659391					
MP0217	CITROEN/PEUGEOT	3701.58	VKBA3476	R159.34			
MP0218	DACIA/RENAULT	6001547685					
MP0218	DACIA/RENAULT	6001547685					
MP0219	DACIA/RENAULT	8200208335					
MP0219	DACIA/RENAULT	7700415121					
MP0219	RENAULT	7700415122					
MP0220	HYUNDAI / KIA	52710-2E500					
MP0221	HYUNDAI / KIA	51750-25000					
MP0221	HYUNDAI / KIA	51750-25001					
MP0222	HYUNDAI	52710-22100		R184.03			
MP0222	HYUNDAI	52710-22300		R184.03			
MP0222	HYUNDAI	52710-22500		R184.03			
MP0222	HYUNDAI	52710-22600		R184.03			
MP0222	HYUNDAI	52745-37000		R184.03			
MP0222/SA	HYUNDAI	52710-22100		R184.03			

CORAM	APPLICATION	O.E.	RIF. SKF	RIF. SNR	RIF. IRB	RIF. OMCAR	RIF. LORETT
MP0222/SA	HYUNDAI	52710-22300		R184.03			
MP0222/SA	HYUNDAI	52710-22500		R184.03			
MP0222/SA	HYUNDAI	52710-22600		R184.03			
MP0222/SA	HYUNDAI	52745-37000		R184.03			
MP0223	HYUNDAI	52750-1C100					
MP0223	HYUNDAI	52750-1G100					
MP0223/SA	HYUNDAI	52750-1C100					
MP0223/SA	HYUNDAI	52750-1G100					
MP0224	TOYOTA	42450-0D010		R169.51			
MP0224	TOYOTA	42450-52020		R169.51			
MP0224	TOYOTA	42450-52021		R169.51			
MP0225	RENAULT	8200807882					
MP0225	RENAULT	7700313184					
MP0226	CITROEN	3748.76	VKBA3659	R166.32		KW12304	CR2748
MP0226	PEUGEOT	3748.79	VKBA3659	R166.32		KW12304	CR2748
MP0227	HYUNDAI	52710-2D100	VKBA6837	R184.16		KW12833	CR7799
MP0228	HYUNDAI	52710-2D025		R184.37			
MP0228	HYUNDAI	52710-2D225		R184.37			
MP0229	OPEL	96535041					
MP0229	OPEL	95492092					
MP0230	OPEL/CHEVROLET/DAEWOO	96549779					
MP0231	HYUNDAI	51750-2E100					
MP0231	HYUNDAI / KIA	51750-3A003					
MP0231	HYUNDAI / KIA	51750-2E000					
MP0231	HYUNDAI / KIA	51750-3A000					
MP0232	VOLKSWAGEN	5Z0407615				433	
MP0233	FIAT	51787397					
MP0233	FIAT	55701518					
MP0233	FIAT	71747713					
MP0233	OPEL	1604017					
MP0233	OPEL	1604358					
MP0233	OPEL	1604018					
MP0233	OPEL	95512288					
MP0233	OPEL/VAUXHALL/GEN. MOTORS	93168760					
MP0233	OPEL/VAUXHALL/GEN. MOTORS	93190215					
MP0234	AUDI/SEAT/SKODA/VW	1K0498621					
MP0234	AUDI/SEAT/SKODA/VW	5K0498621A					
MP0234	AUDI/SEAT/SKODA/VW	1K0498621					

CORAM	APPLICATION	O.E.	RIF. SKF	RIF. SNR	RIF. IRB	RIF. OMCAR	RIF. LORETT
MP0234	AUDI/SEAT/SKODA/VW	5K0498621A					
MP0234	AUDI/SEAT/SKODA/VW	1K0498621					
MP0234	AUDI/SEAT/SKODA/VW	5K0498621A					
MP0235	AUDI	4H0498625F					
MP0235	AUDI	4H0498625					
MP0235	AUDI	4H0498625A					
MP0235	AUDI	4H0498625B					
MP0235	AUDI	4H0498625D					
MP0235	AUDI	8K0407625A					
MP0235	AUDI	8K0407625E					
MP0235	AUDI	8K0598625					
MP0236	NISSAN	40202-1KA0A					
MP0236	NISSAN	40202-2560R					
MP0236	NISSAN	40202-EN010					
MP0236	NISSAN	40202--JG000					
MP0236	NISSAN	40202--JG01A					
MP0236	NISSAN	40202--JG02B					
MP0236	NISSAN	40202BA60A					
MP0236	RENAULT	40202-JY00A					
MP0236	RENAULT	713613910					
MP0237	ALFA ROMEO	50702890					
MP0237	ALFA ROMEO	50707555					
MP0237	ALFA ROMEO	50702890					
MP0237	ALFA ROMEO	50707555					
MP0238	CITROEN	374885					
MP0238	CITROEN	374885					
MP0238	CITROEN	374885					
MP0238	CITROEN	374885					
MP0238	TOYOTA	42450-0H010					
MP0238	TOYOTA	42450-0H010					
MP0238	TOYOTA	42450-0H010					
MP0238	TOYOTA	42450-0H010					
MP0239	TOYOTA	42450-0D050					
MP0239	TOYOTA	42450-52060					
MP0239	TOYOTA	424500D051					
MP0239	TOYOTA	42450-0D050					
MP0239	TOYOTA	42450-52060					
MP0239	TOYOTA	424500D051					

CORAM	APPLICATION	O.E.	RIF. SKF	RIF. SNR	RIF. IRB	RIF. OMCAR	RIF. LORETT
MP0239	TOYOTA	42450-0D050					
MP0239	TOYOTA	42450-52060					
MP0239	TOYOTA	424500D051					
MP0240	FORD	1230942					
MP0240	FORD	1309814					
MP0240	FORD	1355129					
MP0240	FORD	1471852					
MP0240	FORD	1506577					
MP0240	FORD	1766628					
MP0240	FORD	3M512C299					
MP0240	FORD	3M512C299RAA					
MP0240	FORD	3M512C299RBA					
MP0240	FORD	3M512C299RBB					
MP0240	FORD	3M512C299RBC					
MP0240	FORD	3M512C300RBB					
MP0240	FORD	7M512C299AC					
MP0240	FORD	7M512C299AD					
MP0241	FIAT	51748680					
MP0241	OPEL	1603143					
MP0241	OPEL	1603243					
MP0241	OPEL	1603294					
MP0241	OPEL	93186388					
MP0241	OPEL/SAAB	93171495					
MP0241	SAAB	12799815					
MP0241	SAAB	93175327					
MP0241	SAAB/CADILLAC	93186387					
MP0242	ALFA ROMEO	51757885					
MP0242	ALFA ROMEO	51757885					
MP0242	ALFA ROMEO	51757885					
MP0242	ALFA ROMEO	51757885					
MP0242	ALFA ROMEO	51757885					
MP0242	ALFA ROMEO	51757885					
MP0242	ALFA ROMEO	51757885					
MP0243	ALFA ROMEO / FIAT / LANCIA	51754942					
MP0243	ALFA ROMEO / FIAT / LANCIA	71753811					
MP0243	ALFA ROMEO / FIAT / LANCIA	51754942					
MP0243	ALFA ROMEO / FIAT / LANCIA	71753811					
MP0243	ALFA ROMEO / FIAT / LANCIA	51754942					

CORAM	APPLICATION	O.E.	RIF. SKF	RIF. SNR	RIF. IRB	RIF. OMCAR	RIF. LORETT
MP0243	ALFA ROMEO / FIAT / LANCIA	71753811					
MP0243	CITROEN / PEUGEOT	3701.82					
MP0243	CITROEN / PEUGEOT	3701.82					
MP0243	CITROEN / PEUGEOT / FIAT	1606375780					
MP0243	CITROEN / PEUGEOT / FIAT	1606375780					
MP0243	CITROEN / PEUGEOT / FIAT	1606375780					
MP0244	ALFA ROMEO / FIAT / LANCIA	51813925					
MP0244	ALFA ROMEO / FIAT / LANCIA	60652011					
MP0244	ALFA ROMEO / FIAT / LANCIA	71714478					
MP0244	ALFA ROMEO / FIAT / LANCIA	60671437					
MP0244	ALFA ROMEO / FIAT / LANCIA	51813925					
MP0244	ALFA ROMEO / FIAT / LANCIA	60652011					
MP0244	ALFA ROMEO / FIAT / LANCIA	71714478					
MP0244	ALFA ROMEO / FIAT / LANCIA	60671437					
MP0244	LANCIA	71738029					
MP0244	LANCIA	71738029					
MP0245	FORD	1516504					
MP0245	FORD	1534483					
MP0245	FORD	1675467					
MP0245	FORD	1699196					
MP0245	FORD	2050608					
MP0245	FORD	2126980					
MP0245	FORD	8V512C299AF					
MP0245	FORD	DCP11A049AA					
MP0246	SMART	4513300059					
MP0246	SMART	4513300159					
MP0246	SMART	A4513300059					
MP0246	SMART	A4513300159					
MP0246	SMART	A451330048					
MP0247	OPEL	1603254					
MP0247	OPEL	93178652					
MP0247	OPEL	1603254					
MP0247	OPEL	93178652					
MP0247	OPEL	1603254					
MP0247	OPEL	93178652					
MP0247	OPEL	1603254					
MP0247	OPEL	93178652					
MP0247	OPEL	1603254					

CORAM	APPLICATION	O.E.	RIF. SKF	RIF. SNR	RIF. IRB	RIF. OMCAR	RIF. LORETT
MP0247	OPEL	93178652					
MP0248	FORD	1471854					
MP0248	FORD	1336139					
MP0248	FORD	1254308					
MP0248	FORD	1230907					
MP0248	FORD	1232245					
MP0248	FORD	1223640					
MP0248	FORD	1326487					
MP0248	FORD	1308716					
MP0248	FORD	3M512C300CH					
MP0248	FORD	3M512C300CA					
MP0248	FORD	3M512C300CG					
MP0248	FORD	3M512C300CF					
MP0248	FORD	3M512C300CE					
MP0248	FORD	3M512C300CD					
MP0249	NISSAN	43202-JG000					
MP0249	NISSAN	432024BA0A					
MP0249	NISSAN	432024CL0A					
MP0249	NISSAN	43202JG01A					
MP0249	NISSAN	43202-JG000					
MP0249	NISSAN	432024BA0A					
MP0249	NISSAN	432024CL0A					
MP0249	NISSAN	43202JG01A					
MP0249	NISSAN	43202-JG000					
MP0249	NISSAN	432024BA0A					
MP0249	NISSAN	432024CL0A					
MP0250	FORD	1201300					
MP0250	FORD	1C1J1K18AA					
MP0250	FORD	4052783					
MP0250	FORD	4506244					
MP0250	FORD	YC152B663AE					
MP0251	OPEL	1604002					
MP0251	OPEL	1604301					
MP0251	OPEL	90510543					
MP0251	OPEL	9119931					
MP0251	SAAB	4778494					
MP0251	SAAB	4839122					
MP0252	OPEL/GEN. MOTORS/VAUXHALL	13123486					

CORAM	APPLICATION	O.E.	RIF. SKF	RIF. SNR	RIF. IRB	RIF. OMCAR	RIF. LORETT
MP0252	OPEL/GEN. MOTORS/VAUXHALL	90538940					
MP0252	OPEL/VAUXHALL	1603209					
MP0252	OPEL/VAUXHALL	9117620					
MP0253	OPEL	16032115I					
MP0253	OPEL	1603211					
MP0253	OPEL	1603211SK					
MP0253	OPEL/GEN. MOTORS	91176225I					
MP0253	OPEL/GEN. MOTORS/VAUXHALL	09117622					
MP0253	OPEL/GEN. MOTORS/VAUXHALL	0911762251					
MP0254	FIAT	51749115					
MP0254	FIAT	129316575,2					
MP0254	FIAT/OPEL/VAUXHALL	104579407					
MP0254	FIAT/OPEL/VAUXHALL	1604314					
MP0254	OPEL/SAAB/VAUXHALL	24421906					
MP0254	OPEL/SAAB/VAUXHALL	93170611					
MP0254	OPEL/SAAB/VAUXHALL	154053743,4					
MP0255	GENERAL MOTORS	93178626					
MP0255	OPEL	1604316					
MP0255	OPEL	93178626					
MP0255	VAUXHALL	93178626					
MP0256	GENERAL MOTORS	93188477					
MP0256	OPEL	1603841					
MP0256	OPEL/VAUXHALL	93188477					
MP0256	VOLKSWAGEN	93188477					
MP0257	CHEVROLET/OPEL/SAAB	13580135					
MP0257	OPEL	13507374					
MP0257	OPEL	322892					
MP0257	OPEL	328006					
MP0257	OPEL	328042					
MP0257	OPEL	328292					
MP0257	OPEL/SAAB	13502785					
MP0258	CHEVROLET	13502829					
MP0258	CHEVROLET	13583479					
MP0258	CHEVROLET	328001					
MP0258	CHEVROLET	328021					
MP0258	OPEL	13502829					
MP0258	OPEL	13583479					
MP0258	OPEL	328001					

CORAM	APPLICATION	O.E.	RIF. SKF	RIF. SNR	RIF. IRB	RIF. OMCAR	RIF. LORETT
MP0258	OPEL	328021					
MP0259	AUDI	8E0598625A					
MP0259	AUDI	8E0598625B					
MP0259	AUDI/VW	4D0407625D					
MP0259	AUDI/VW	4D0407625H					
MP0259	AUDI/VW	8D0498625C					
MP0259	AUDI/VW	8E0498625					
MP0259	AUDI/VW/SEAT	8E0498625B					
MP0260	AUDI/SEAT	8E0598611					
MP0260	AUDI/SEAT	8E0598611C					
MP0260	AUDI/SEAT	8E0598611A					
MP0260	AUDI/SEAT	8E0598611B					
MP0261	ALFA ROMEO / LANCIA	82466910					
MP0261	FIAT	51820109					
MP0261	FIAT	51897452					
MP0261	FIAT	52017379					

HYUNDAI	CORAM
52710-22100	MP0222
52710-22100	MP0222/SA
ALFA	**CORAM**
46425959	MP0029
60501373	MP0039
60510129	MP0083
60510367	MP0082
60510369	MP0082
60545087	MP0079
60559321	MP0040
60563372	MP0081
60568138	MP0084
60613615	MP0087
60652014	MP0166
60653528	MP0081
60800548	MP0022
60801644	MP0085
60801750	MP0022
60806445	MP0029
60809668	MP0101
60809668	MP0118
60811032	MP0086
60812057	MP0080
60815160	MP0167
60815429	MP0165
7645817	MP0022
7732410	MP0029
7788206	MP0167
82441470	MP0031
82466910	MP0086
82469109	MP0085
ALFA/FIAT/LANCIA	**CORAM**
60808903	MP0031
82462175	MP0031

ALFAROMEO	CORAM
50702890	MP0237
50707555	MP0237
51757885	MP0242
ALFAROMEO/FIAT/LANCIA	**CORAM**
51754942	MP0243
51813925	MP0244
60652011	MP0244
60671437	MP0244
71714478	MP0244
71753811	MP0243
ALFAROMEO/LANCIA	**CORAM**
82466910	MP0261
ALFA/FIAT	**CORAM**
46453887	MP0027
46453887	MP0033
46519901	MP0165
60809985	MP0027
60812195	MP0027
60812195	MP0033
7603679	MP0027
7603679	MP0033
7750120	MP0027
7750120	MP0033
AUDI	**CORAM**
1K0501611E	MP0173
1K0598611	MP0173
1T0498621	MP0172
443407615A	MP0044
4A0407615D	MP0089
4A0407615F	MP0089
4H0498625	MP0235
4H0498625A	MP0235
4H0498625B	MP0235
4H0498625D	MP0235
4H0498625F	MP0235

6E0598611	MP0169
893407615A	MP0042
893407615B	MP0043
893407615D	MP0045
8A0407615	MP0043
8A0407615C	MP0045
8E0598625A	MP0259
8E0598625B	MP0259
8K0407625A	MP0235
8K0407625E	MP0235
8K0598625	MP0235
AUDI/SEAT	**CORAM**
8E0598611	MP0260
8E0598611A	MP0260
8E0598611B	MP0260
8E0598611C	MP0260
AUDI/SEAT/SKODA	**CORAM**
6Q0407621AH	MP0170
6Q0407621AJ	MP0170
AUDI/SEAT/SKODA/VW	**CORAM**
1K0498621	MP0234
5K0498621A	MP0234
AUDI/SEAT/VOLKSWAGEN	**CORAM**
357501117	MP0088
AUDI/SKODA/VOLKSWAGEN	**CORAM**
1J0501477A	MP0090
1J0598477	MP0090
6Q0598611	MP0171
AUDI/VOLKSWAGEN	**CORAM**
1J0407613C	MP0150
1J0407613G	MP0150
357501117A	MP0046
4A0501117A	MP0168
823407615A	MP0041

8D0407615B	MP0091
8D0407615D	MP0091
8D0407615E	MP0091
8D0501117C	MP0168
AUDI/VW	**CORAM**
4D0407625D	MP0259
4D0407625H	MP0259
8D0498625C	MP0259
8E0498625	MP0259
AUDI/VW/SEAT	**CORAM**
8E0498625B	MP0259
AUTOBIANCHI	**CORAM**
4214408	MP0001
4260431	MP0003
4267990	MP0001
4341664	MP0001
4399777	MP0003
4400918	MP0006
5963034	MP0018
7578589	MP0003
7578589	MP0023
AUTOBIANCHI/ZASTAVA	**CORAM**
4379767	MP0002
4399856	MP0002
5948422	MP0002
BMW	**CORAM**
31211131297	MP0093
31221139345	MP0092
33411093567	MP0174
33411131118	MP0094
CHEVROLET	**CORAM**
13502829	MP0258
13583479	MP0258
328001	MP0258

328021	MP0258
CHEVROLET/OPEL/SAAB	**CORAM**
13580135	MP0257
CHRYSLER	**CORAM**
4641517	MP0175
4641517AD	MP0175
CITROEN	**CORAM**
330764	MP0097
330774	MP0095
330775	MP0099
3748.76	MP0226
374828	MP0176
374829	MP0179
374830	MP0100
374836	MP0177
374844	MP0177
374885	MP0238
CITROEN/PEUGEOT	**CORAM**
3701.82	MP0243
CITROEN/PEUGEOT/FIAT	**CORAM**
1606375780	MP0243
CITROEN/LANCIA	**CORAM**
1311508080	MP0097
CITROEN/PEUGEOT	**CORAM**
330765	MP0034
330766	MP0035
330769	MP0096
330771	MP0096
330772	MP0096
330776	MP0098
335028	MP0178
3701.42	MP0215
3701.58	MP0217
374843	MP0176

95496146	MP0215
9558882680	MP0215
DACIA/RENAULT	**CORAM**
6001547685	MP0218
7700415121	MP0219
8200208335	MP0219
DODGE	**CORAM**
4641517	MP0175
4641517AD	MP0175
FIAT	**CORAM**
129316575,2	MP0254
1300472080	MP0034
1307355080	MP0035
1328045080	MP0182
1328053080	MP0183
4214408	MP0001
4267990	MP0001
4341664	MP0001
4399039	MP0003
4399039	MP0023
4400919	MP0014
4459689	MP0017
46447445	MP0103
46512973	MP0165
46554135	MP0027
46554135	MP0033
46554135	MP0180
46745258	MP0181
46798592	MP0102
51748680	MP0241
51749115	MP0254
51787397	MP0233
51820109	MP0261
51897452	MP0261
52017379	MP0261
55701518	MP0233

5927842	MP0019
60751504	MP0022
60809721	MP0029
60811481	MP0029
71747713	MP0233
7522385	MP0102
7538260	MP0018
7569715	MP0105
7578589	MP0003
7578589	MP0023
7595521	MP0022
7613514	MP0029
7641450	MP0025
7645817	MP0027
7645817	MP0033
7657422	MP0106
7717348	MP0104
7746191	MP0078
7787124	MP0033
82390272	MP0022
82433787	MP0022
82491391	MP0103
97659391	MP0216
FIAT/LANCIA	**CORAM**
1473543080	MP0178
4260431	MP0003
4260431	MP0023
4340061	MP0001
4390949	MP0007
4390949	MP0020
4399777	MP0003
4399777	MP0023
4400918	MP0006
5888279	MP0001
5955456	MP0008
60807234	MP0030
60808829	MP0028
60809805	MP0079

71714474	MP0178
7591328	MP0007
7591328	MP0020
7599661	MP0002
7603485	MP0032
7608131	MP0021
7617175	MP0015
7634577	MP0007
7634577	MP0020
7634578	MP0024
7641577	MP0024
7643294	MP0024
7667265	MP0022
7769902	MP0080
82377953	MP0015
82400997	MP0030
82403117	MP0028
82438592	MP0026
82463292	MP0101
82463292	MP0118
82469083	MP0030
9567217780	MP0178
FIAT/LANCIA/ZASTAVA	**CORAM**
4344535	MP0002
4381043	MP0002
7599461	MP0002
FIAT/OPEL/VAUXHALL	**CORAM**
104579407	MP0254
1604314	MP0254
FORD	**CORAM**
1078709	MP0108
1121342	MP0108
1146119	MP0058
1201300	MP0250
1223640	MP0248
1230907	MP0248

1230942	MP0240
1232245	MP0248
1254308	MP0248
1308716	MP0248
1309814	MP0240
1326487	MP0248
1336139	MP0248
1355129	MP0240
1471852	MP0240
1471854	MP0248
1506577	MP0240
1516504	MP0245
1534483	MP0245
1644842	MP0056
1675467	MP0245
1699196	MP0245
1766628	MP0240
1C1J1K18AA	MP0250
2050608	MP0245
2126980	MP0245
3903036	MP0058
3M512C299	MP0240
3M512C299RAA	MP0240
3M512C299RBA	MP0240
3M512C299RBB	MP0240
3M512C299RBC	MP0240
3M512C300CA	MP0248
3M512C300CD	MP0248
3M512C300CE	MP0248
3M512C300CF	MP0248
3M512C300CG	MP0248
3M512C300CH	MP0248
3M512C300RBB	MP0240
4052783	MP0250
4103347	MP0184
4506244	MP0250
5027621	MP0110
5027622	MP0107

6517013	MP0058
6517014	MP0057
7201007	MP0108
7346525	MP0109
7M512C299AC	MP0240
7M512C299AD	MP0240
8V512C299AF	MP0245
DCP11A049AA	MP0245
YC152B663AE	MP0250
GENERALMOTORS	**CORAM**
93178626	MP0255
93188477	MP0256
HONDA	**CORAM**
44600-SM4-020	MP0114
44600-S04-980	MP0115
44600-S04-A00	MP0116
44600-ST3-E00	MP0117
HYUNDAI	**CORAM**
5175024500	MP0111
5175029000	MP0112
5175029100	MP0113
51750-2E100	MP0231
52710-22300	MP0222
52710-22300	MP0222/SA
52710-22500	MP0222
52710-22500	MP0222/SA
52710-22600	MP0222
52710-22600	MP0222/SA
52710-2D025	MP0228
52710-2D100	MP0227
52710-2D225	MP0228
52745-37000	MP0222
52745-37000	MP0222/SA
52750-1C100	MP0223
52750-1C100	MP0223/SA
52750-1G100	MP0223

52750-1G100	MP0223/SA
HYUNDAI/KIA	**CORAM**
51750-25000	MP0221
51750-25001	MP0221
51750-2E000	MP0231
51750-3A000	MP0231
51750-3A003	MP0231
52710-2E500	MP0220
LADA	**CORAM**
21083103012	MP0061
21213103012	MP0060
21213103014	MP0060
LANCIA	**CORAM**
46512973	MP0165
46519901	MP0165
60563372	MP0081
60653528	MP0081
60751141	MP0028
60751816	MP0028
60815160	MP0167
60816898	MP0081
71738029	MP0244
7788206	MP0167
82400997	MP0028
MERCEDES	**CORAM**
1243574608	MP0120
1683370345	MP0185
1683500035	MP0186
1683500335	MP0186
1683500435	MP0187
2013571708	MP0119
2033570008	MP0189
2103300325	MP0188
2113570308	MP0190

MINI	**CORAM**
31226756889	MP0192
33416756830	MP0191
NISSAN	**CORAM**
402020M010	MP0121
40202-1KA0A	MP0236
40202-2560R	MP0236
402022F000	MP0125
402024F100	MP0122
402024F105	MP0123
402024M400	MP0193
4020290J00	MP0124
40202BA60A	MP0236
40202-EN010	MP0236
40202--JG000	MP0236
40202--JG01A	MP0236
40202--JG02B	MP0236
40204AX600	MP0194
432024BA0A	MP0249
432024CL0A	MP0249
43202-JG000	MP0249
43202JG01A	MP0249
82000046549	MP0194
OPEL	**CORAM**
13502829	MP0258
13507374	MP0257
13583479	MP0258
1603143	MP0241
1603208	MP0197
1603210	MP0198
1603211	MP0253
160321151	MP0253
1603211SK	MP0253
1603243	MP0241
1603254	MP0247
1603294	MP0241
1603841	MP0256

1604002	MP0251
1604004	MP0129
1604005	MP0199
1604017	MP0233
1604018	MP0233
1604301	MP0251
1604303	MP0129
1604307	MP0129
1604316	MP0255
1604358	MP0233
322892	MP0257
326001	MP0200
326168	MP0065
326169	MP0065
326173	MP0066
326178	MP0065
326184	MP0066
326185	MP0126
326194	MP0127
326195	MP0130
326196	MP0128
326197	MP0065
328001	MP0258
328006	MP0257
328021	MP0258
328042	MP0257
328292	MP0257
421006	MP0129
4707270	MP0195
4707271	MP0196
90468191	MP0129
90510543	MP0251
90511494	MP0129
90540262	MP0129
9119931	MP0251
93178626	MP0255
93178652	MP0247
93186388	MP0241

95492092	MP0229
95512288	MP0233
96535041	MP0229
OPEL/CHEVROLET/DAEWOO	**CORAM**
96549779	MP0230
OPEL/GEN.MOTORS	**CORAM**
911762251	MP0253
OPEL/GEN.MOTORS/VAUXHALL	**CORAM**
09117622	MP0253
0911762251	MP0253
13123486	MP0252
90538940	MP0252
OPEL/SAAB	**CORAM**
13502785	MP0257
93171495	MP0241
OPEL/SAAB/VAUXHALL	**CORAM**
154053743,4	MP0254
24421906	MP0254
93170611	MP0254
OPEL/VAUXHALL	**CORAM**
1603209	MP0252
9117620	MP0252
93188477	MP0256
OPEL/VAUXHALL/GEN.MOTORS	**CORAM**
93168760	MP0233
93190215	MP0233
PEUGEOT	**CORAM**
330749	MP0069
330762	MP0095
3748.79	MP0226
374835	MP0201

RENAULT	**CORAM**
40202-JY00A	MP0236
713613910	MP0236
7700308572	MP0077
7700313184	MP0225
7700415121	MP0133
7700415122	MP0219
7700628767	MP0073
7700715149	MP0076
7700719140	MP0074
7700768318	MP0075
7700768319	MP0075
7700787639	MP0077
7700803928	MP0077
7700803928	MP0131
7700809185	MP0077
7700830220	MP0132
7700830220	MP0164
7700840156	MP0202
7701204667	MP0131
7701204692	MP0131
7701205170	MP0204
7704002262	MP0077
8200003026	MP0203
8200807882	MP0225
ROVER	**CORAM**
EFP7567	MP0205
EJP7459	MP0134
RFB000170	MP0205
RUB101250	MP0135
SAAB	**CORAM**
12799815	MP0241
4107462	MP0206
4778494	MP0251
4839122	MP0251
595948422	MP0002
8947384	MP0136

8952996	MP0137
8971095	MP0138
8993875	MP0137
8993883	MP0137
8993891	MP0137
8993909	MP0137
93175327	MP0241
SAAB/CADILLAC	**CORAM**
93186387	MP0241
SAAB/SEAT	**CORAM**
3981594	MP0002
SE021149002A	MP0002
SEAT	**CORAM**
191501118D	MP0141
1K0501611E	MP0173
1K0598611	MP0173
3981586	MP0006
3981593	MP0014
6X0598477	MP0151
7M0501655	MP0153
7M0501655A	MP0153
7M0501655B	MP0153
7M0501655D	MP0153
SE028140301A	MP0006
SE028160302A	MP0014
SE138140304A	MP0143
SEAT/VOLKSWAGEN	**CORAM**
191501117A	MP0142
191501118C	MP0140
1T0498621	MP0172
333501117	MP0142
333501117A	MP0139
333501118	MP0141
333501118A	MP0140
357407613B	MP0144
357407615	MP0050

357407615A	MP0051
6K9501477	MP0207
6X0501477	MP0151
SKODA	**CORAM**
115430010	MP0145
115430011	MP0146
6U0407615A	MP0146
SMART	**CORAM**
1870V021000000	MP0208
2072V009000000	MP0209
4513300059	MP0246
4513300159	MP0246
A4513300059	MP0246
A4513300159	MP0246
A451330048	MP0246
TOYOTA	**CORAM**
4241052020	MP0212
4241052021	MP0212
42450-0D010	MP0224
42450-0D050	MP0239
424500D051	MP0239
42450-0H010	MP0238
42450-52020	MP0224
42450-52021	MP0224
42450-52060	MP0239
4350202021	MP0211
4350205020	MP0210
4350205021	MP0210
435020D010	MP0213
4350212090	MP0148
4350220131	MP0147
4350232080	MP0210
4350252010	MP0213
VAUXHALL	**CORAM**
93178626	MP0255

VOLKSWAGEN	**CORAM**
175407615	MP0048
191407615	MP0049
1H0407613B	MP0149
5Z0407615	MP0232
6N0407613	MP0152
7M0501655	MP0153
861407615A	MP0047
93188477	MP0256
VOLVO	**CORAM**
1359818	MP0159
271394	MP0157
271449	MP0158
271585	MP0160
271589	MP0160
271645	MP0158
271786	MP0161
271905	MP0162
30855922	MP0163
3455827	MP0154
3472719	MP0155
ZASTAVA	**CORAM**
1612961	MP0016

MOZZI RUOTA
WHEEL HUBS
MOYEUX DE ROUE

LISTA DI COMPARAZIONE CON COMPETITORS – COMPETITORS CROSS REFERENCES
REFERENCES CROISEES AVEC CODES DES CONCURRENTS

RIF. IRB	CORAM
IR-8059	MP0006
IR-8060	MP0014
IR-8098	MP0028
IR-8106	MP0077
IR-8505	MP0027
IR-8505	MP0033
IR-8508	MP0093
IR-8591	MP0092
IR-8619	MP0178
K-02/13	MP0090
K-07/21	MP0100
K-11/26	MP0110
K-11/27	MP0107
K-29/32	MP0131
K-30/32	MP0001
K-34/24	MP0029
K-36/38	MP0002
K-36/38	MP0032
K-40/18	MP0161
K-40/19	MP0162
K-40/22	MP0160

RIF. LORETT	CORAM
C148	MP0001
C157	MP0006
C158	MP0014
C186	MP0030
C187	MP0028
C190	MP0002
C191	MP0031
C198	MP0027
C198	MP0033
C201	MP0029
C219	MP0080
C222	MP0178
C256	MP0165
C259	MP0166
C382	MP0092
C405	MP0215
C443	MP0180
C533	MP0206
C576	MP0077
CR1700	MP0045
CR1701	MP0041
CR1702	MP0042
CR1705	MP0046
CR1706	MP0048
CR1707	MP0049
CR1708	MP0050
CR1709	MP0051
CR1710	MP0065
CR1711	MP0066
CR1712	MP0069
CR1713	MP0073
CR1714	MP0074
CR1715	MP0039
CR1716	MP0040
CR1721	MP0056
CR1722	MP0057
CR1743	MP0008
CR1746	MP0015
CR1750	MP0017
CR1751	MP0003
CR1751	MP0023
CR1752	MP0105
CR1754	MP0007
CR1754	MP0020
CR1769	MP0026
CR1777	MP0103
CR1779	MP0021
CR1781	MP0022
CR1789	MP0058
CR1822	MP0024
CR1824	MP0106
CR1917	MP0060
CR1918	MP0061
CR1927	MP0109
CR1931	MP0075
CR1939	MP0047
CR1940	MP0043
CR1942	MP0044
CR1943	MP0095
CR1944	MP0096
CR1946	MP0097
CR1948	MP0034
CR1949	MP0098
CR1951	MP0034
CR1953	MP0035
CR1955	MP0167
CR1956	MP0128
CR1957	MP0076
CR1958	MP0152
CR2114	MP0093
CR2234	MP0157
CR2236	MP0158
CR2255	MP0160
CR2256	MP0161
CR2257	MP0162
CR2558	MP0171
CR2567	MP0169
CR2575	MP0179
CR2662	MP0156
CR2667	MP0176
CR2680	MP0110
CR2681	MP0107
CR2748	MP0226
CR7799	MP0227

RIF. OMCAR	CORAM
189	MP0018
190	MP0006
191	MP0014
192	MP0019
194	MP0089
195	MP0048

196	MP0049
197	MP0050
198	MP0041
199	MP0042
200	MP0051
201	MP0047
202	MP0043
203	MP0046
204	MP0045
205	MP0044
206	MP0144
207	MP0152
208	MP0088
209	MP0149
210	MP0069
211	MP0095
212	MP0096
214	MP0097
215	MP0098
216	MP0099
217	MP0100
220	MP0074
221	MP0075
222	MP0073
223	MP0076
224	MP0132
225	MP0133
226	MP0164
230	MP0039
231	MP0040
232	MP0022
233	MP0086
240	MP0060
241	MP0061
250	MP0056
251	MP0057
252	MP0058
253	MP0108

254	MP0109
255	MP0110
256	MP0107
260	MP0145
261	MP0146
265	MP0091
266	MP0150
267	MP0151
268	MP0153
269	MP0090
270	MP0065
271	MP0066
272	MP0126
273	MP0128
274	MP0127
275	MP0130
276	MP0129
278	MP0105
279	MP0106
280	MP0034
281	MP0035
300	MP0002
301	MP0001
302	MP0017
305	MP0028
306	MP0030
307	MP0031
308	MP0083
309	MP0085
310	MP0032
311	MP0026
312	MP0027
312	MP0033
313	MP0029
314	MP0015
315	MP0078
316	MP0016
317	MP0104

318	MP0080
319	MP0087
320	MP0131
321	MP0084
322	MP0143
323	MP0111
324	MP0112
325	MP0113
326	MP0121
327	MP0122
328	MP0123
329	MP0124
330	MP0125
331	MP0147
332	MP0148
333	MP0134
334	MP0135
335	MP0114
336	MP0115
337	MP0116
338	MP0117
339	MP0136
340	MP0138
341	MP0137
342	MP0154
343	MP0155
344	MP0159
345	MP0163
346	MP0119
347	MP0120
348	MP0094
349	MP0092
350	MP0003
350	MP0023
351	MP0007
351	MP0020
352	MP0021
353	MP0024

354	MP0008
355	MP0025
356	MP0082
357	MP0081
358	MP0103
359	MP0102
360	MP0079
370	MP0093
371	MP0101
371	MP0118
372	MP0157
373	MP0160
374	MP0161
375	MP0162
376	MP0156
377	MP0206
378	MP0158
379	MP0139
380	MP0140
381	MP0141
382	MP0142
383	MP0168
384	MP0174
385	MP0175
386	MP0184
387	MP0186
388	MP0187
389	MP0189
390	MP0190
391	MP0193
392	MP0200
393	MP0197
394	MP0198
395	MP0199
396	MP0202
397	MP0203
398	MP0205
399	MP0208

400	MP0209
401	MP0210
402	MP0211
403	MP0213
404	MP0167
405	MP0182
406	MP0204
407	MP0212
408	MP0207
409	MP0177
410	MP0176
411	MP0179
412	MP0201
413	MP0185
414	MP0188
415	MP0195
416	MP0196
417	MP0194
418	MP0170
419	MP0171
420	MP0172
421	MP0191
422	MP0192
423	MP0165
424	MP0180
425	MP0178
426	MP0166
427	MP0169
428	MP0173
431	MP0183
432	MP0181
433	MP0232
500	MP0006
501	MP0014
KW12304	MP0226
KW12833	MP0227
RIF. SKF	**CORAM**
633555	MP0028

BA2B633200C	MP0001
BA2B633265	MP0002
BAF0040	MP0165
BAF0049	MP0166
BAFB444450BB	MP0215
BAFB633622	MP0002
BAR0048	MP0197
BAR0051	MP0209
BAR0053B	MP0198
BARB636109E	MP0175
VKBA1303	MP0028
VKBA1304	MP0030
VKBA1313	MP0157
VKBA1408	MP0206
VKBA1411	MP0100
VKBA1434	MP0158
VKBA1435	MP0159
VKBA1436	MP0155
VKBA1437	MP0156
VKBA1440	MP0027
VKBA1440	MP0033
VKBA1441	MP0029
VKBA1443	MP0018
VKBA1449	MP0083
VKBA1450	MP0085
VKBA1458	MP0092
VKBA1476	MP0031
VKBA1481	MP0110
VKBA1482	MP0107
VKBA310	MP0014
VKBA3415	MP0161
VKBA3422	MP0129
VKBA3424	MP0178
VKBA3425	MP0162
VKBA3436	MP0084
VKBA3438	MP0131
VKBA3439	MP0131
VKBA3442	MP0080

VKBA3454	MP0201
VKBA3456	MP0090
VKBA3459	MP0087
VKBA3471	MP0160
VKBA3476	MP0217
VKBA3477	MP0176
VKBA3478	MP0179
VKBA3482	MP0177
VKBA3488	MP0161
VKBA3491	MP0204
VKBA3514	MP0199
VKBA3549	MP0169
VKBA3567	MP0171
VKBA3569	MP0170
VKBA3583	MP0180
VKBA3643	MP0172
VKBA3659	MP0226
VKBA3930	MP0212
VKBA625	MP0002
VKBA626	MP0001
VKBA627	MP0001
VKBA6837	MP0227
VKBA734	MP0006
VKBA746	MP0136
VKBA890	MP0093
VKBA913	MP0137
VKBA914	MP0138
VKBA938	MP0093
VKBA940	MP0002
VKBA940	MP0032
VKBA943	MP0136
VKBA967	MP0131
VKBA968	MP0131
RIF. SNR	**CORAM**
R150.15	MP0093
R150.17	MP0093
R150.22	MP0092
R152.43	MP0110

R152.44	MP0107
R153.22	MP0129
R15330	MP0198
R15331	MP0197
R15334	MP0199
R15451	MP0169
R155.25	MP0131
R155.39	MP0131
R155.40	MP0131
R155.41	MP0131
R15556	MP0204
R157.27	MP0017
R15731	MP0171
R15732	MP0170
R158.089	MP0001
R158.10	MP0002
R158.13	MP0006
R158.14	MP0014
R158.17	MP0002
R158.17	MP0032
R158.19	MP0030
R158.20	MP0028
R158.21	MP0029
R158.22	MP0027
R158.22	MP0033
R158.26	MP0026
R158.29	MP0018
R158.33	MP0031
R158.39	MP0080
R15823	MP0180
R159.34	MP0217
R15932	MP0178
R15933	MP0177
R15936	MP0201
R15937	MP0176
R160.16	MP0083
R160.17	MP0085
R160.22	MP0084

R16026	MP0166
R164.07	MP0136
R164.09	MP0136
R164.10	MP0137
R164.11	MP0138
R164.13	MP0206
R165.10	MP0155
R165.12	MP0157
R165.13	MP0158
R165.14	MP0159
R165.15	MP0156
R165.17	MP0161
R165.18	MP0160
R166.21	MP0100
R166.32	MP0226
R16623	MP0179
R169.51	MP0224
R182.61	MP0207
R184.03	MP0222
R184.03	MP0222/SA
R184.16	MP0227
R184.37	MP0228
R18601	MP0175
TGB12095S43	MP0077
TGB12894	MP0215

MOZZI RUOTA
WHEEL HUBS
MOYEUX DE ROUE
IMMAGINI – IMAGES – IMAGES

MP0001

AUTOBIANCHI	4214408	FIAT	4341664
AUTOBIANCHI	4267990	FIAT/LANCIA	4340061
AUTOBIANCHI	4341664	FIAT/LANCIA	5888279
FIAT	4214408	FIAT/LANCIA	5888279
FIAT	4267990		

MP0002

AUTOBIANCHI/ZASTAVA	4379767	FIAT/LANCIA/ZASTAVA	4381043
AUTOBIANCHI/ZASTAVA	4399856	FIAT/LANCIA/ZASTAVA	7599461
AUTOBIANCHI/ZASTAVA	5948422	SAAB	595948422
FIAT/LANCIA	7599661	SAAB/SEAT	3981594
FIAT/LANCIA/ZASTAVA	4344535	SAAB/SEAT	SE021149002A

MP0003

AUTOBIANCHI	4260431	FIAT/LANCIA	4260431
AUTOBIANCHI	4399777	FIAT/LANCIA	4399777
AUTOBIANCHI	7578589		
FIAT	4399039		
FIAT	7578589		

MP0006

AUTOBIANCHI	4400918		
FIAT/LANCIA	4400918		
SEAT	3981586		
SEAT	SE028140301A		

MP0007

FIAT/LANCIA	4390949		
FIAT/LANCIA	7591328		
FIAT/LANCIA	7634577		

MP0008

FIAT/LANCIA	5955456		

MP0014

FIAT	4400919		
FIAT	4400919		
SEAT	3981593		
SEAT	SE028160302A		

MP0015

FIAT/LANCIA	7617175		
FIAT/LANCIA	82377953		

MP0016

ZASTAVA	1612961		

MP0017

FIAT	4459689		

MP0018

AUTOBIANCHI	5963034		
FIAT	7538260		

MP0019

FIAT	5927842		

MP0020

FIAT/LANCIA	4390949		
FIAT/LANCIA	7591328		
FIAT/LANCIA	7634577		

MP0021

FIAT/LANCIA	7608131		

MP0022

ALFA	60800548	FIAT	82390272
ALFA	60801750	FIAT	82433787
ALFA	7645817	FIAT/LANCIA	7667265
FIAT	60751504		
FIAT	7595521		

MP0023

AUTOBIANCHI	7578589		
FIAT	4399039		
FIAT	7578589		
FIAT/LANCIA	4260431		
FIAT/LANCIA	4399777		

MP0024

FIAT/LANCIA	7634578		
FIAT/LANCIA	7641577		
FIAT/LANCIA	7643294		

MP0025

FIAT	7641450		

MP0026

FIAT/LANCIA	82438592		

MP0027

ALFA/FIAT	46453887	FIAT	46554135
ALFA/FIAT	60809985	FIAT	7645817
ALFA/FIAT	60812195		
ALFA/FIAT	7603679		
ALFA/FIAT	7750120		

MP0028

FIAT/LANCIA	60808829		
FIAT/LANCIA	82403117		
LANCIA	60751141		
LANCIA	60751816		
LANCIA	82400997		

MP0029

ALFA	46425959	FIAT	7613514
ALFA	60806445		
ALFA	7732410		
FIAT	60809721		
FIAT	60811481		

MP0030

FIAT/LANCIA	60807234		
FIAT/LANCIA	82400997		
FIAT/LANCIA	82469083		

MP0031

ALFA	82441470		
ALFA /FIAT/LANCIA	60808903		
ALFA /FIAT/LANCIA	82462175		

MP0032

FIAT/LANCIA	7603485		

MP0033

ALFA/FIAT	46453887	FIAT	7645817
ALFA/FIAT	60812195	FIAT	7787124
ALFA/FIAT	7603679		
ALFA/FIAT	7750120		
FIAT	46554135		

MP0034

CITROEN/PEUGEOT	330765		
FIAT	1300472080		
FIAT	1300472080		

MP0035

CITROEN/PEUGEOT	330766		
FIAT	1307355080		

MP0039

ALFA	60501373		

MP0040

ALFA	60559321		

MP0041

AUDI/VOLKSWAGEN	823407615A		

MP0042

AUDI	893407615A		

MP0043

AUDI	893407615B		
AUDI	8A0407615		

MP0044

AUDI	443407615A		

MP0045

AUDI	893407615D		
AUDI	8A0407615C		

MP0046

AUDI/VOLKSWAGEN	357501117A		

MP0047

VOLKSWAGEN	861407615A		

MP0048

VOLKSWAGEN	175407615		

MP0049

VOLKSWAGEN	191407615		

MP0050

SEAT/VOLKSWAGEN	357407615		

MP0051

SEAT/VOLKSWAGEN	357407615A		

MP0056

FORD	1644842		

MP0057

FORD	6517014		

MP0058

FORD	1146119		
FORD	3903036		
FORD	6517013		

MP0060

LADA	21213103012		
LADA	21213103014		

MP0061

LADA	21083103012		

MP0065

OPEL	326168		
OPEL	326169		
OPEL	326178		
OPEL	326197		

MP0066

OPEL	326173		
OPEL	326184		

MP0069

PEUGEOT	330749		

MP0073

RENAULT	7700628767		

MP0074

RENAULT	7700719140		

MP0075

RENAULT	7700768318		
RENAULT	7700768319		

MP0076

RENAULT	7700715149		

MP0077

RENAULT	7700308572		
RENAULT	7700787639		
RENAULT	7700803928		
RENAULT	7700809185		
RENAULT	7704002262		

MP0078

FIAT	7746191		

MP0079

ALFA	60545087		
FIAT/LANCIA	60809805		

MP0080

ALFA	60812057		
FIAT/LANCIA	7769902		

MP0081

ALFA	60563372		
ALFA	60653528		
LANCIA	60563372		
LANCIA	60653528		
LANCIA	60816898		

MP0082

ALFA	60510367		
ALFA	60510369		

MP0083

ALFA	60510129		

MP0084

ALFA	60568138		

MP0085

ALFA	60801644		
ALFA	82469109		

MP0086

ALFA	60811032		
ALFA	82466910		

MP0087

ALFA	60613615		

MP0088

AUDI/SEAT/VOLKSWAGEN	357501117		

MP0089

AUDI	4A0407615D		
AUDI	4A0407615F		

MP0090

AUDI/SKODA/VOLKSWAGEN	1J0501477A		
AUDI/SKODA/VOLKSWAGEN	1J0598477		

MP0091

AUDI/VOLKSWAGEN	8D0407615B		
AUDI/VOLKSWAGEN	8D0407615D		
AUDI/VOLKSWAGEN	8D0407615E		

MP0092

BMW	31221139345		

MP0093

BMW	31211131297		
BMW	31211131297		

MP0094

BMW	33411131118		

MP0095

CITROEN	330774		

MP0095

PEUGEOT	330762		

MP0096

CITROEN/PEUGEOT	330769		
CITROEN/PEUGEOT	330771		
CITROEN/PEUGEOT	330772		

MP0097

CITROEN	330764		
CITROEN/LANCIA	1311508080		

MP0098

CITROEN/PEUGEOT	330776		

MP0099

CITROEN	330775		

MP0100

CITROEN	374830		

MP0101

ALFA	60809668		
FIAT/LANCIA	82463292		

MP0102

FIAT	46798592		
FIAT	7522385		

MP0103

FIAT	46447445		
FIAT	82491391		

MP0104

FIAT	7717348		

MP0105

FIAT	7569715		

MP0106

FIAT	7657422		

MP0107

FORD	5027622		

MP0108

FORD	1078709		
FORD	1121342		
FORD	7201007		

MP0109

FORD	7346525		

MP0110

FORD	5027621		

MP0111

HYUNDAI	5175024500		

MP0112

HYUNDAI	5175029000		

MP0113

HYUNDAI	5175029100		

MP0114

HONDA	44600-SM4-020		

MP0115

HONDA	44600-S04-980		

MP0116

HONDA	44600-S04-A00		

MP0117

HONDA	44600-ST3-E00		

MP0118

ALFA	60809668		
FIAT/LANCIA	82463292		

MP0119

MERCEDES	2013571708		

MP0120

MERCEDES	1243574608		

MP0121

NISSAN	402020M010		

MP0122

NISSAN	402024F100		

MP0123

NISSAN	402024F105		

MP0124

NISSAN	4020290J00		

MP0125

NISSAN	402022F000		

MP0126

OPEL	326185		

MP0127

OPEL	326194		

MP0128

OPEL	326196		

MP0129

OPEL	1604004	OPEL	90511494
OPEL	1604303	OPEL	90540262
OPEL	1604307		
OPEL	421006		
OPEL	90468191		

MP0130

OPEL	326195		

MP0131

RENAULT	7700803928		
RENAULT	7701204667		
RENAULT	7701204667		
RENAULT	7701204692		
RENAULT	7701204692		

MP0132

RENAULT	7700830220		

MP0133

RENAULT	7700415121		

MP0134

ROVER	EJP7459		

MP0135

No image available

ROVER	RUB101250		

MP0136

SAAB	8947384		
SAAB	8947384		

MP0137

SAAB	8952996		
SAAB	8993875		
SAAB	8993883		
SAAB	8993891		
SAAB	8993909		

MP0138

SAAB	8971095		

MP0139

SEAT/VOLKSWAGEN	333501117A		

MP0140

SEAT/VOLKSWAGEN	191501118C		
SEAT/VOLKSWAGEN	333501118A		

MP0141

SEAT	191501118D		
SEAT/VOLKSWAGEN	333501118		

MP0142

SEAT/VOLKSWAGEN	191501117A		
SEAT/VOLKSWAGEN	333501117		

MP0143

SEAT	SE138140304A		

MP0144

SEAT/VOLKSWAGEN	357407613B		

MP0145

SKODA	115430010		

MP0146

SKODA	115430011		
SKODA	6U0407615A		

MP0147

TOYOTA	4350220131		

MP0148

TOYOTA	4350212090		

MP0149

VOLKSWAGEN	1H0407613B		

MP0150

AUDI/VOLKSWAGEN	1J0407613C		
AUDI/VOLKSWAGEN	1J0407613G		

MP0151

SEAT	6X0598477		
SEAT/VOLKSWAGEN	6X0501477		

MP0152

VOLKSWAGEN	6N0407613		

MP0153

SEAT	7M0501655		
SEAT	7M0501655A		
SEAT	7M0501655B		
SEAT	7M0501655D		
VOLKSWAGEN	7M0501655		

MP0154

VOLVO	3455827		

MP0155

VOLVO	3472719		

MP0156

VOLVO			

MP0157

VOLVO	271394		

MP0158

VOLVO	271449		
VOLVO	271645		

MP0159

VOLVO	1359818		

MP0160

VOLVO	271585		
VOLVO	271589		

MP0161

VOLVO	271786		
VOLVO	271786		

MP0162

VOLVO	271905		

MP0163

VOLVO	30855922		

MP0164

RENAULT	7700830220		

MP0165

ALFA	60815429		
ALFA/FIAT	46519901		
FIAT	46512973		
LANCIA	46512973		
LANCIA	46519901		

MP0166

ALFA	60652014		

MP0167

ALFA	60815160		
ALFA	7788206		
LANCIA	60815160		
LANCIA	7788206		

MP0168

AUDI/VOLKSWAGEN	4A0501117A		
AUDI/VOLKSWAGEN	8D0501117C		

MP0169

AUDI	6E0598611		

MP0170

AUDI/SEAT/SKODA	6Q0407621AH		
AUDI/SEAT/SKODA	6Q0407621AJ		

MP0171

AUDI/SKODA/VOLKSWAGEN	6Q0598611		

MP0172

AUDI	1T0498621		
SEAT/VOLKSWAGEN	1T0498621		

MP0173

AUDI	1K0501611E		
AUDI	1K0598611		
SEAT	1K0501611E		
SEAT	1K0598611		

MP0174

BMW	33411093567		

MP0175

CHRYSLER	4641517		
CHRYSLER	4641517AD		
DODGE	4641517		
DODGE	4641517AD		

MP0176

CITROEN	374828		
CITROEN/PEUGEOT	374843		

MP0177

CITROEN	374836		
CITROEN	374844		

MP0178

CITROEN/PEUGEOT	335028		
FIAT/LANCIA	1473543080		
FIAT/LANCIA	71714474		
FIAT/LANCIA	9567217780		

MP0179

CITROEN	374829		

MP0180

FIAT	46554135		

MP0181

FIAT	46745258		

MP0182

FIAT	1328045080		

MP0183

FIAT	1328053080		

MP0184

FORD	4103347		

MP0185

MERCEDES	1683370345		

MP0186

MERCEDES	1683500035		
MERCEDES	1683500335		

MP0187

MERCEDES	1683500435		

MP0188

MERCEDES	2103300325		

MP0189

MERCEDES	2033570008		

MP0190

MERCEDES	2113570308		

MP0191

MINI	33416756830		

MP0192

MINI	31226756889		

MP0193

NISSAN	402024M400		

MP0194

NISSAN	40204AX600		
NISSAN	82000046549		

MP0195

OPEL	4707270		

MP0196

OPEL	4707271		

MP0197

OPEL	1603208		

MP0198

OPEL	1603210		

MP0199

OPEL	1604005		

MP0200

OPEL	326001		

MP0201

PEUGEOT	374835		

MP0202

RENAULT	7700840156		

MP0203

RENAULT	8200003026		

MP0204

RENAULT	7701205170		

MP0205

ROVER	EFP7567		
ROVER	RFB000170		

MP0206

SAAB	4107462		

MP0207

SEAT/VOLKSWAGEN	6K9501477		

MP0208

SMART	1870V021000000		

MP0209

SMART	2072V009000000		

MP0210

TOYOTA	4350205020		
TOYOTA	4350205021		
TOYOTA	4350232080		

MP0211

TOYOTA	4350202021		

MP0212

TOYOTA	4241052020		
TOYOTA	4241052021		

MP0213

TOYOTA	435020D010		
TOYOTA	4350252010		

MP0214

LADA			

MP0215

CITROEN/PEUGEOT	3701.42		
CITROEN/PEUGEOT	95496146		
CITROEN/PEUGEOT	9558882680		

MP0216

FIAT	97659391		

MP0217

CITROEN/PEUGEOT	3701.58		

MP0218

DACIA/RENAULT	6001547685		
DACIA/RENAULT	6001547685		

MP0219

DACIA/RENAULT	7700415121		
DACIA/RENAULT	8200208335		
RENAULT	7700415122		

MP0220

HYUNDAI / KIA	52710-2E500		

MP0221

HYUNDAI / KIA	51750-25000		
HYUNDAI / KIA	51750-25001		

MP0222

HYUNDAI	52710-22100		
HYUNDAI	52710-22300		
HYUNDAI	52710-22500		
HYUNDAI	52710-22600		
HYUNDAI	52745-37000		

MP0222/SA

HYUNDAI	52710-22100		
HYUNDAI	52710-22300		
HYUNDAI	52710-22500		
HYUNDAI	52710-22600		
HYUNDAI	52745-37000		

MP0223

HYUNDAI	52750-1C100		
HYUNDAI	52750-1G100		

MP0223/SA

HYUNDAI	52750-1C100		
HYUNDAI	52750-1G100		

MP0224

TOYOTA	42450-0D010		
TOYOTA	42450-52020		
TOYOTA	42450-52021		

MP0225

RENAULT	7700313184		
RENAULT	8200807882		

MP0226

CITROEN	3748.76		
PEUGEOT	3748.79		

MP0227

HYUNDAI	52710-2D100		

MP0228

HYUNDAI	52710-2D025		
HYUNDAI	52710-2D225		

MP0229

OPEL	95492092		
OPEL	96535041		

MP0230

OPEL/CHEVROLET/DAEWOO	96549779		

MP0231

HYUNDAI	51750-2E100		
HYUNDAI / KIA	51750-2E000		
HYUNDAI / KIA	51750-3A000		
HYUNDAI / KIA	51750-3A003		

MP0232

VOLKSWAGEN	5Z0407615		

MP0233

FIAT	51787397	OPEL	1604358
FIAT	55701518	OPEL	95512288
FIAT	71747713	OPEL/VAUXHALL/GEN. MOTORS	93168760
OPEL	1604017	OPEL/VAUXHALL/GEN. MOTORS	93190215
OPEL	1604018		

MP0234

AUDI/SEAT/SKODA/VW	1K0498621	AUDI/SEAT/SKODA/VW	5K0498621A
AUDI/SEAT/SKODA/VW	1K0498621		
AUDI/SEAT/SKODA/VW	1K0498621		
AUDI/SEAT/SKODA/VW	5K0498621A		
AUDI/SEAT/SKODA/VW	5K0498621A		

MP0235

AUDI	4H0498625	AUDI	8K0407625A
AUDI	4H0498625A	AUDI	8K0407625E
AUDI	4H0498625B	AUDI	8K0598625
AUDI	4H0498625D		
AUDI	4H0498625F		

MP0236

NISSAN	40202-1KA0A	NISSAN	40202--JG01A
NISSAN	40202-2560R	NISSAN	40202--JG02B
NISSAN	40202BA60A	RENAULT	40202-JY00A
NISSAN	40202-EN010	RENAULT	713613910
NISSAN	40202--JG000		

MOZZI RUOTA
WHEEL HUBS
MOYEUX DE ROUE
IMMAGINI – IMAGES – IMAGES

MP0237

ALFA ROMEO	50702890		
ALFA ROMEO	50702890		
ALFA ROMEO	50707555		
ALFA ROMEO	50707555		

MP0238

CITROEN	374885	TOYOTA	42450-0H010
CITROEN	374885	TOYOTA	42450-0H010
CITROEN	374885	TOYOTA	42450-0H010
CITROEN	374885		
TOYOTA	42450-0H010		

MP0239

TOYOTA	42450-0D050	TOYOTA	424500D051
TOYOTA	42450-0D050	TOYOTA	42450-52060
TOYOTA	42450-0D050	TOYOTA	42450-52060
TOYOTA	424500D051	TOYOTA	42450-52060
TOYOTA	424500D051		

MP0240

FORD	1230942	FORD	1766628
FORD	1309814	FORD	3M512C299
FORD	1355129	FORD	3M512C299RAA
FORD	1471852	FORD	3M512C299RBA
FORD	1506577	FORD	3M512C299RBB

MP0241

FIAT	51748680	OPEL/SAAB	93171495
OPEL	1603143	SAAB	12799815
OPEL	1603243	SAAB	93175327
OPEL	1603294	SAAB/CADILLAC	93186387
OPEL	93186388		

MP0242

ALFA ROMEO	51757885	ALFA ROMEO	51757885
ALFA ROMEO	51757885	ALFA ROMEO	51757885
ALFA ROMEO	51757885		
ALFA ROMEO	51757885		
ALFA ROMEO	51757885		

MP0243

ALFA ROMEO / FIAT / LANCIA	51754942	ALFA ROMEO / FIAT / LANCIA	71753811
ALFA ROMEO / FIAT / LANCIA	51754942	CITROEN / PEUGEOT	3701.82
ALFA ROMEO / FIAT / LANCIA	51754942	CITROEN / PEUGEOT	3701.82
ALFA ROMEO / FIAT / LANCIA	71753811	CITROEN / PEUGEOT / FIAT	1606375780
ALFA ROMEO / FIAT / LANCIA	71753811	CITROEN / PEUGEOT / FIAT	1606375780

MP0244

ALFA ROMEO / FIAT / LANCIA	51813925	ALFA ROMEO / FIAT / LANCIA	60671437
ALFA ROMEO / FIAT / LANCIA	51813925	ALFA ROMEO / FIAT / LANCIA	71714478
ALFA ROMEO / FIAT / LANCIA	60652011	ALFA ROMEO / FIAT / LANCIA	71714478
ALFA ROMEO / FIAT / LANCIA	60652011	LANCIA	71738029
ALFA ROMEO / FIAT / LANCIA	60671437	LANCIA	71738029

MP0245

FORD	1516504	FORD	2126980
FORD	1534483	FORD	8V512C299AF
FORD	1675467	FORD	DCP11A049AA
FORD	1699196		
FORD	2050608		

MP0246

No image available

SMART	4513300059		
SMART	4513300159		
SMART	A4513300059		
SMART	A4513300159		
SMART	A451330048		

MP0247

OPEL	1603254	OPEL	93178652
OPEL	1603254	OPEL	93178652
OPEL	1603254	OPEL	93178652
OPEL	1603254	OPEL	93178652
OPEL	1603254	OPEL	93178652

MP0248

No image available

FORD	1223640	FORD	1326487
FORD	1230907	FORD	1336139
FORD	1232245	FORD	1471854
FORD	1254308	FORD	3M512C300CA
FORD	1308716	FORD	3M512C300CD

MP0249

NISSAN	432024BA0A	NISSAN	432024CL0A
NISSAN	432024BA0A	NISSAN	43202-JG000
NISSAN	432024BA0A	NISSAN	43202-JG000
NISSAN	432024CL0A	NISSAN	43202-JG000
NISSAN	432024CL0A	NISSAN	43202JG01A

MP0250

No image available

FORD	1201300		
FORD	1C1J1K18AA		
FORD	4052783		
FORD	4506244		
FORD	YC152B663AE		

MP0251

No image available

OPEL	1604002	SAAB	4839122
OPEL	1604301		
OPEL	90510543		
OPEL	9119931		
SAAB	4778494		

MP0252

No image available

OPEL/GEN. MOTORS/VAUXHALL	13123486		
OPEL/GEN. MOTORS/VAUXHALL	90538940		
OPEL/VAUXHALL	1603209		
OPEL/VAUXHALL	9117620		

MP0253

No image available

OPEL	1603211	OPEL/GEN. MOTORS/VAUXHALL	0911762251
OPEL	1603211S1		
OPEL	1603211SK		
OPEL/GEN. MOTORS	911762251		
OPEL/GEN. MOTORS/VAUXHALL	09117622		

MP0254

No image available

FIAT	129316575,2	OPEL/SAAB/VAUXHALL	24421906
FIAT	51749115	OPEL/SAAB/VAUXHALL	93170611
FIAT/OPEL/VAUXHALL	104579407		
FIAT/OPEL/VAUXHALL	1604314		
OPEL/SAAB/VAUXHALL	154053743,4		

MP0255

No image available

GENERAL MOTORS	93178626		
OPEL	1604316		
OPEL	93178626		
VAUXHALL	93178626		

MP0256

No image available

GENERAL MOTORS	93188477		
OPEL	1603841		
OPEL/VAUXHALL	93188477		
VOLKSWAGEN	93188477		

MP0257

No image available

CHEVROLET/OPEL/SAAB	13580135	OPEL	328292
OPEL	13507374	OPEL/SAAB	13502785
OPEL	322892		
OPEL	328006		
OPEL	328042		

MP0258

No image available

CHEVROLET	13502829	OPEL	13583479
CHEVROLET	13583479	OPEL	328001
CHEVROLET	328001	OPEL	328021
CHEVROLET	328021		
OPEL	13502829		

MP0259

No image available

AUDI	8E0598625A	AUDI/VW	8E0498625
AUDI	8E0598625B	AUDI/VW/SEAT	8E0498625B
AUDI/VW	4D0407625D		
AUDI/VW	4D0407625H		
AUDI/VW	8D0498625C		

MP0260

No image available

AUDI/SEAT	8E0598611		
AUDI/SEAT	8E0598611A		
AUDI/SEAT	8E0598611B		
AUDI/SEAT	8E0598611C		

MP0261

No image available

ALFA ROMEO / LANCIA	82466910		
FIAT	51820109		
FIAT	51897452		
FIAT	52017379		

Coram®

by HPARTS
Automotive Solutions

KIT RUOTA AUTO E VEICOLI COMMERCIALI
Wheel bearing kits for cars and commercial vehicles

ABARTH

MODELLO MODEL	ASS.ANT. FRONT AXLE	ASS.POS. REAR AXLE	ANNO YEAR	RIF ORIGINALE ORIGINAL REF	RIF CORAM CORAM REF	NOTE NOTES
500 / 595 / 695						
1.4	X		08->	1587565	**KCR12001**	SI ABS
1.4		X	08->	46519901	**KMR12001**	SI ABS
500C / 595C / 695C						
1.4	X		08->	1587565	**KCR12001**	SI ABS
1.4		X	08->	46519901	**KMR12001**	SI ABS
GRANDE PUNTO						
1.4	X		07-dic	1587565	**KCR12001**	SI ABS
1.4		X	07-dic	71747713	**KMR12002**	SI ABS
PUNTO						
1.4	X		12->	1587565	**KCR12001**	SI ABS
1.4		X	12->	71747713	**KMR12002**	SI ABS
PUNTO EVO						
1.4	X		08-dic	1587565	**KCR12001**	SI ABS
1.4		X	08-dic	71747713	**KMR12002**	SI ABS
RITMO						
125 TC 2.0		X	81-87	4399856	**KMR12004**	

ALFA ROMEO

MODELLO MODEL	ASS.ANT. FRONT AXLE	ASS.POS. REAR AXLE	ANNO YEAR	RIF ORIGINALE ORIGINAL REF	RIF CORAM CORAM REF	NOTE NOTES
145						
1.4 i.e. - 1.6 i.e. - 1.7 i.e 16V		X	94-96	46453887	**KMR12102**	
1.4 i.e. - 1.6 i.e. - 1.7 i.e 16V	X		94-96	46423869	**KCR12009**	
1.4 i.e. 16V TS - 1.6 i.e. 16V TS	X		96-01	1587565	**KCR12001**	SI ABS
1.4 i.e. 16V TS - 1.6 i.e. 16V TS		X	96-01	46453887	**KMR12102**	
1.4 i.e. 16V TS - 1.6 i.e. 16V TS	X		96-01	46423869	**KCR12009**	
1.6 16V TS	X		97-00	1587565	**KCR12001**	SI ABS
1.6 16V TS		X	97-00	46453887	**KMR12102**	
1.6 16V TS	X		97-00	46423869	**KCR12009**	
1.8 i.e 16V - 2.0 16V	X		98-01	1587565	**KCR12001**	SI ABS
1.8 i.e 16V - 2.0 16V		X	98-01	46453887	**KMR12102**	
1.8 i.e 16V - 2.0 16V	X		98-01	46423869	**KCR12009**	
1.8 i.e 16V TS	X		96-98	1587565	**KCR12001**	SI ABS
1.8 i.e 16V TS		X	96-98	46453887	**KMR12102**	

follow ALFA ROMEO

MODELLO MODEL	ASS.ANT. FRONT AXLE	ASS.POS. REAR AXLE	ANNO YEAR	RIF ORIGINALE ORIGINAL REF	RIF CORAM CORAM REF	NOTE NOTES
146						
1.4 i.e. - 1.6 i.e. - 1.7 i.e 16V		X	94-96	46453887	**KMR12102**	
1.4 i.e. - 1.6 i.e. - 1.7 i.e 16V	X		94-96	46423869	**KCR12009**	
1.4 i.e. 16V TS - 1.6 i.e. 16V TS - 1.8 i.e 16V TS	X		96-01	1587565	**KCR12001**	SI ABS
1.4 i.e. 16V TS - 1.6 i.e. 16V TS - 1.8 i.e 16V TS		X	96-01	46453887	**KMR12102**	
1.4 i.e. 16V TS - 1.6 i.e. 16V TS - 1.8 i.e 16V TS	X		96-01	46423869	**KCR12009**	
1.6 16V TS		X	97-00	46453887	**KMR12102**	
1.9 JTD		X	99-01	46453887	**KMR12102**	
1.9 TD	X		94-99	1587565	**KCR12001**	SI ABS
1.9 TD		X	94-99	46453887	**KMR12102**	
1.9 TD	X		94-99	46423869	**KCR12009**	
2.0 16V	X		97-01	1587565	**KCR12001**	SI ABS
2.0 16V		X	97-01	46453887	**KMR12102**	
2.0 16V	X		97-01	46423869	**KCR12009**	
2.0 16V TS	X		95-01	1587565	**KCR12001**	SI ABS
2.0 16V TS		X	95-01	46453887	**KMR12102**	
2.0 16V TS	X		95-01	46423869	**KCR12009**	
147						
1.6 16V T.SPARK - 1.6 16V T.SPARK ECO		X	01-ott	60652014	**KMR12101**	SI ABS
1.6 16V T.SPARK - 1.6 16V T.SPARK ECO		X	01-ott	51757885	**KMR12104**	SI ABS
1.6 LPG		X	09-ott	60652014	**KMR12101**	SI ABS
1.6 LPG		X	09-ott	51757885	**KMR12104**	SI ABS
1.9 JTD - 2.0 16V T.SPARK		X	01-ott	51757885	**KMR12104**	SI ABS
1.9 JTD - 3.2 GTA		X	03-ott	60652014	**KMR12101**	SI ABS
1.9 JTD 16V		X	02-ott	51757885	**KMR12104**	SI ABS
1.9 JTD 16V		X	02-ott	60652014	**KMR12101**	SI ABS
1.9 JTDM - 1.9 JTDM 16V		X	04-ott	60652014	**KMR12101**	SI ABS
1.9 JTDM - 1.9 JTDM 16V		X	04-ott	51757885	**KMR12104**	SI ABS
1.9 JTDM 8V		X	05-ott	51757885	**KMR12104**	SI ABS
1.9 JTDM 8V		X	05-ott	60652014	**KMR12101**	SI ABS
2.0 16V T. SPARK		X	01-ott	60652014	**KMR12101**	SI ABS
3.2 GTA		X	03-ott	51757885	**KMR12104**	SI ABS
3.2 GTA	X		03-ott	51813925	**KMR12105**	SI ABS

follow ALFA ROMEO

MODELLO MODEL	ASS.ANT. FRONT AXLE	ASS.POS. REAR AXLE	ANNO YEAR	RIF ORIGINALE ORIGINAL REF	RIF CORAM CORAM REF	NOTE NOTES
155						
1.6 16V TS - 1.7 TS 16V		X	96-97	46453887	**KMR12102**	
1.6 16V TS - 1.7 TS 16V	X		96-97	46423869	**KCR12009**	
1.7 TS		X	93-96	46453887	**KMR12102**	
1.7 TS	X		93-96	46423869	**KCR12009**	
1.8 TS	X		92-97	46423869	**KCR12009**	
1.8 TS - 2.5 V6		X	92-97	46453887	**KMR12102**	
1.8 TS Sport		X	92-96	46453887	**KMR12102**	
1.8 TS Sport	X		92-96	46423869	**KCR12009**	
1.9 TD - 2.5 TD		X	93-97	46453887	**KMR12102**	
1.9 TD - 2.5 TD	X		93-97	46423869	**KCR12009**	
2.0 TS		X	92-95	46453887	**KMR12102**	
2.0 TS	X		92-95	46423869	**KCR12009**	
2.0 TS 16V		X	95-97	46453887	**KMR12102**	
2.0 TS 16V	X		95-97	46423869	**KCR12009**	
156						
1.6 16V T.SPARK - 1.8 16V T.SPARK		X	97-05	51757885	**KMR12104**	SI ABS
1.6 16V T.SPARK - 1.8 16V T.SPARK - 1.9 JTD - 2.4 JTD	X		97-05	51813925	**KMR12105**	SI ABS
1.6 16V T.SPARK - 1.9 JTD - 2.4 JTD - 2.5 V6 24V		X	97-05	60652014	**KMR12101**	SI ABS
1.9 JTD		X	01-mag	51757885	**KMR12104**	SI ABS
1.9 JTD 16V - 2.0 JTS		X	02-mag	51757885	**KMR12104**	SI ABS
1.9 JTD 16V - 2.0 JTS - 3.2 GTA	X		02-mag	51813925	**KMR12105**	SI ABS
1.9 JTD 16V - 3.2 GTA		X	02-mag	60652014	**KMR12101**	SI ABS
2.0 16V T.SPARK		X	97-02	60652014	**KMR12101**	SI ABS
2.0 16V T.SPARK	X		97-02	51813925	**KMR12105**	SI ABS
2.0 JTS		X	01-mag	60652014	**KMR12101**	SI ABS
2.4 JTD - 3.2 GTA		X	02-mag	51757885	**KMR12104**	SI ABS
2.5 V6 24V		X	00-05	51757885	**KMR12104**	SI ABS
2.5 V6 24V	X		97-05	51813925	**KMR12105**	SI ABS

follow ALFA ROMEO

MODELLO MODEL	ASS.ANT. FRONT AXLE	ASS.POS. REAR AXLE	ANNO YEAR	RIF ORIGINALE ORIGINAL REF	RIF CORAM CORAM REF	NOTE NOTES
156 Sportwagon						
1.6 16V T.SPARK	X		00-06	51813925	**KMR12105**	SI ABS
1.6 16V T.SPARK - 1.8 16V T.SPARK - 1.9 JTD		X	00-06	60652014	**KMR12101**	SI ABS
1.6 16V T.SPARK - 1.9 JTD		X	00-06	51757885	**KMR12104**	SI ABS
1.8 16V T.SPARK - 2.5 V6 24V		X	97-06	51757885	**KMR12104**	SI ABS
1.8 16V T.SPARK - 2.5 V6 24V	X		97-06	51813925	**KMR12105**	SI ABS
1.9 JTD		X	01-giu	51757885	**KMR12104**	SI ABS
1.9 JTD 16V - 2.0 JTS - 3.2 GTA		X	02-giu	60652014	**KMR12101**	SI ABS
1.9 JTD 16V - 2.0 JTS - 3.2 GTA		X	02-giu	51757885	**KMR12104**	SI ABS
1.9 JTD 16V - 2.0 JTS - 3.2 GTA	X		02-giu	51813925	**KMR12105**	SI ABS
1.9 JTD 16V Q4		X	04-giu	46836200	**KCR12010**	SI ABS
2.0 16V T.SPARK		X	00-02	60652014	**KMR12101**	SI ABS
2.0 16V T.SPARK	X		00-02	51813925	**KMR12105**	SI ABS
2.4 JTD		X	00-06	60652014	**KMR12101**	SI ABS
2.4 JTD		X	00-06	51757885	**KMR12104**	SI ABS
2.4 JTD	X		00-06	51813925	**KMR12105**	SI ABS
159						
1.8 MPI - 1.9 JTDM 16V - 1.9 JTDM 8V - 1.9 JTS - 2.2JTS	X		05-nov	50702890	**KMR12103**	SI ABS
1.8 TBi	X		09-dic	50702890	**KMR12103**	SI ABS
2.0 JTDM	X		08-nov	50702890	**KMR12103**	SI ABS
2.4 JTDM - 3.2 JTS Q4	X	X	05-nov	50702890	**KMR12103**	SI ABS
2.4 JTDM Q4	X		07-nov	50702890	**KMR12103**	SI ABS
3.2 JTS	X		08-nov	50702890	**KMR12103**	SI ABS
159 Sportwagon						
1.8 MPI	X		05-nov	50702890	**KMR12103**	SI ABS
1.9 JTDM 16V - 1.9 JTDM 8V - 1.9 JTS - 2.2JTS - 2.4 JTDM	X		06-nov	50702890	**KMR12103**	SI ABS
2.0 JTDM	X		09-nov	50702890	**KMR12103**	SI ABS
2.4 JTDM Q4	X		07-nov	50702890	**KMR12103**	SI ABS
3.2 JTS	X		08-nov	50702890	**KMR12103**	SI ABS
3.2 JTS Q4	X		06-nov	50702890	**KMR12103**	SI ABS
166						
2.0 T. Spark - 2.4 JTD - 2.5 V6 24V - 3.0 V6 24V	X		98-07	51813925	**KMR12105**	SI ABS
2.0 V6	X		98-00	51813925	**KMR12105**	SI ABS
4C						
1.8	X		13-20	51754196	**KMR12009**	SI ABS

follow ALFA ROMEO

MODELLO MODEL	ASS.ANT. FRONT AXLE	ASS.POS. REAR AXLE	ANNO YEAR	RIF ORIGINALE ORIGINAL REF	RIF CORAM CORAM REF	NOTE NOTES
4C SPIDER						
1.8	X		14-20	51754196	**KMR12009**	SI ABS
BRERA						
1.8 TBi - 2.0 JTDM	X		09-ott	50702890	**KMR12103**	SI ABS
2.2 JTS - 2.4 JTDM 20V	X		06-nov	50702890	**KMR12103**	SI ABS
3.2 JTS	X		08-ott	50702890	**KMR12103**	SI ABS
3.2 JTS Q4	X	X	06-nov	50702890	**KMR12103**	SI ABS
GT						
1.8 TS - 1.9 JTD - 2.0 JTS - 3.2 GTA		X	03-ott	60652014	**KMR12101**	SI ABS
1.8 TS - 1.9 JTD - 2.0 JTS - 3.2 GTA		X	03-ott	51757885	**KMR12104**	SI ABS
1.8 TS - 1.9 JTD - 2.0 JTS - 3.2 GTA	X		03-ott	51813925	**KMR12105**	SI ABS
GTV						
1.8 16V	X		98-05	1587565	**KCR12001**	SI ABS
1.8 16V	X		98-05	46423869	**KCR12009**	
1.8 16V		X	98-05	51754196	**KMR12009**	SI ABS
2.0 JTS	X		03-mag	1587565	**KCR12001**	SI ABS
2.0 JTS - 3.2 V6 24V		X	03-mag	51754196	**KMR12009**	SI ABS
2.0 T. SPARK 16V	X		95-05	1587565	**KCR12001**	SI ABS
2.0 T. SPARK 16V	X		95-05	46423869	**KCR12009**	
2.0 T. SPARK 16V		X	95-05	51754196	**KMR12009**	SI ABS
3.0 V6 24V		X	96-05	51754196	**KMR12009**	SI ABS
MITO						
1.3 Multijet	X		ago-18	1587565	**KCR12001**	SI ABS
1.4 Bifuel - 1.4 MultiAir - 1.4 Turbo MultiAir	X		09->	1587565	**KCR12001**	SI ABS
1.4 TB	X		13->	1587565	**KCR12001**	SI ABS
1.4 TJET	X		08-nov	1587565	**KCR12001**	SI ABS
1.6 JTDM	X		08->	1587565	**KCR12001**	SI ABS

follow ALFA ROMEO

MODELLO MODEL	ASS.ANT. FRONT AXLE	ASS.POS. REAR AXLE	ANNO YEAR	RIF ORIGINALE ORIGINAL REF	RIF CORAM CORAM REF	NOTE NOTES
SPIDER						
1.8 16V	X		98-05	1587565	**KCR12001**	SI ABS
1.8 16V	X		98-05	46423869	**KCR12009**	
1.8 16V		X	98-05	51754196	**KMR12009**	SI ABS
1.8 TBi - 2.0 JTDM	X		09-nov	50702890	**KMR12103**	SI ABS
2.0 JTS	X		03-mag	1587565	**KCR12001**	SI ABS
2.0 JTS - 3.2 V6 24V		X	03-mag	51754196	**KMR12009**	SI ABS
2.0 T.SPARK 16V	X		95-05	1587565	**KCR12001**	SI ABS
2.0 T.SPARK 16V	X		95-05	46423869	**KCR12009**	
2.0 T.SPARK 16V		X	95-05	51754196	**KMR12009**	SI ABS
2.0 V6 Turbo		X	98-05	51754196	**KMR12009**	SI ABS
2.2 JTS - 2.4 JTDM	X		06-nov	50702890	**KMR12103**	SI ABS
3.0 V6		X	04-mag	51754196	**KMR12009**	SI ABS
3.0 V6 24V		X	99-03	51754196	**KMR12009**	SI ABS
3.2 JTS	X		08-nov	50702890	**KMR12103**	SI ABS
3.2 JTS Q4	X	X	06-nov	50702890	**KMR12103**	SI ABS

AUDI

MODELLO MODEL	ASS.ANT. FRONT AXLE	ASS.POS. REAR AXLE	ANNO YEAR	RIF ORIGINALE ORIGINAL REF	RIF CORAM CORAM REF	NOTE NOTES
100 C1 Coupé						
1.9		X	70-76	191598625	**KCR529**	
100 C1 Tre volumi						
1.6		X	75-76	191598625	**KCR529**	
1.8		X	68-76	191598625	**KCR529**	
1.9		X	71-76	191598625	**KCR529**	
100 C2 Tre volumi						
1.6		X	76-82	191598625	**KCR529**	
2.0		X	76-78	191598625	**KCR529**	
50						
1.1		X	74-78	191598625	**KCR529**	
1.3		X	74-77	191598625	**KCR529**	
60						
1.5		X	68-72	191598625	**KCR529**	

follow AUDI

MODELLO MODEL	ASS.ANT. FRONT AXLE	ASS.POS. REAR AXLE	ANNO YEAR	RIF ORIGINALE ORIGINAL REF	RIF CORAM CORAM REF	NOTE NOTES
75						
1.7		X	68-72	191598625	**KCR529**	
80						
1.4	X		86-88	4B0498625	**KCR27102**	
1.6	X		86-94	4B0498625	**KCR27102**	
1.6 D	X		87-89	4B0498625	**KCR27102**	
1.6 TD - 1.8 E - 1.8 S	X		86-91	4B0498625	**KCR27102**	
1.8	X		86-90	4B0498625	**KCR27102**	
1.8 E	X		93-94	4B0498625	**KCR27102**	
1.8 E quattro - 1.8 S quattro	X	X	86-91	4B0498625	**KCR27102**	
1.8 quattro	X	X	86-90	4B0498625	**KCR27102**	
1.9 D	X		89-91	4B0498625	**KCR27102**	
1.9 TD - 1.9 TDI - 2.3 E	X		91-94	4B0498625	**KCR27102**	
2.0 - 2.0 E 16V	X		90-94	4B0498625	**KCR27102**	
2.0 E	X		88-94	4B0498625	**KCR27102**	
2.0 E 16V quattro	X	X	90-94	4B0498625	**KCR27102**	
2.0 E quattro	X	X	88-94	4B0498625	**KCR27102**	
2.0 quattro	X	X	88-91	4B0498625	**KCR27102**	
2.3 E quattro	X	X	91-94	4B0498625	**KCR27102**	
2.6 quattro		X	92-94	4B0498625	**KCR27102**	
2.8 quattro		X	91-94	4B0498625	**KCR27102**	
80 Avant						
1.6 E - 2.0 E 16V	X		93-96	4B0498625	**KCR27102**	
1.9 TD - 2.3 E quattro	X		91-94	4B0498625	**KCR27102**	
1.9 TDI - 2.0 - 2.0 E - 2.3 E	X		92-96	4B0498625	**KCR27102**	
80 B1 Tre volumi						
1.3		X	72-78	191598625	**KCR529**	
1.5		X	72-75	191598625	**KCR529**	
1.6		X	75-78	191598625	**KCR529**	
1.6 GT		X	73-76	191598625	**KCR529**	
1.6 GTE		X	76-78	191598625	**KCR529**	

follow AUDI

MODELLO MODEL	ASS.ANT. FRONT AXLE	ASS.POS. REAR AXLE	ANNO YEAR	RIF ORIGINALE ORIGINAL REF	RIF CORAM CORAM REF	NOTE NOTES
80 B2 Tre volumi						
1.3		X	78-81	191598625	**KCR529**	
1.6		X	78-87	191598625	**KCR529**	
1.6 D		X	80-86	191598625	**KCR529**	
1.6 GLE		X	78-82	191598625	**KCR529**	
1.6 TD		X	81-86	191598625	**KCR529**	
1.8		X	83-86	191598625	**KCR529**	
1.8 GTE		X	84-86	191598625	**KCR529**	
1.9 CD-5S		X	81-83	191598625	**KCR529**	
2.0		X	83-84	191598625	**KCR529**	
80 B3 Tre volumi						
1.4		X	86-88	191598625	**KCR529**	
1.6 - 1.6 TD - 1.8 E - 1.8 S		X	86-91	191598625	**KCR529**	
1.8		X	86-90	191598625	**KCR529**	
1.9 D		X	89-91	191598625	**KCR529**	
2.0 - 2.0 E 16V		X	90-91	191598625	**KCR529**	
2.0 E		X	88-90	191598625	**KCR529**	
80 B4 Avant						
1.9 TD		X	91-94	191598625	**KCR529**	
80 B4 Tre volumi						
1.6 - 1.9 TD - 1.9 TDI - 2.0 2.0 E - 2.0 E 16V		X	91-94	191598625	**KCR529**	
90						
1.6 TD	X		85-91	4B0498625	**KCR27102**	
2.0	X		84-91	4B0498625	**KCR27102**	
2.0 20 V	X		89-91	4B0498625	**KCR27102**	
2.0 20 V quattro - 2.3 20V quattro	X	X	88-91	4B0498625	**KCR27102**	
2.0 E - 2.3 E	X		87-91	4B0498625	**KCR27102**	
2.0 E quattro - 2.3 E quattro	X	X	87-91	4B0498625	**KCR27102**	
2.0 quattro	X	X	89-90	4B0498625	**KCR27102**	
2.2	X		84-87	4B0498625	**KCR27102**	
90 B2						
1.6 TD		X	85-87	191598625	**KCR529**	
2.0 - 2.2		X	84-87	191598625	**KCR529**	

follow AUDI

MODELLO MODEL	ASS.ANT. FRONT AXLE	ASS.POS. REAR AXLE	ANNO YEAR	RIF ORIGINALE ORIGINAL REF	RIF CORAM CORAM REF	NOTE NOTES
90 B3						
1.6 TD - 2.2 E		X	87-91	191598625	**KCR529**	
2.0		X	88-91	191598625	**KCR529**	
2.0 20V		X	89-91	191598625	**KCR529**	
A1						
1.0 TFSI - 1.8 TFSI	X		15-18	6Q0407621AH	**KMR27102**	SI ABS
1.0 TFSI - 1.8 TFSI		X	15-18	6Q0598611	**KMR27103**	SI ABS
1.2 TFSI	X		ott-15	6Q0407621AH	**KMR27102**	SI ABS
1.2 TFSI - 1.4 TFSI - 1.6 TDI	X		ott-15	1T0498621	**KMR27001**	SI ABS
1.2 TFSI - 1.6 TDI		X	ott-15	6Q0598611	**KMR27103**	SI ABS
1.4 TDI - 1.4 TSI		X	14-18	6Q0598611	**KMR27103**	SI ABS
1.4 TDI - 1.4 TSI - S1 quattro	X		14-18	6Q0407621AH	**KMR27102**	SI ABS
1.4 TFSI - 1.6 TDI	X		ott-18	6Q0407621AH	**KMR27102**	SI ABS
1.4 TFSI - 1.6 TDI		X	ott-18	6Q0598611	**KMR27103**	SI ABS
2.0 TDI	X		nov-15	1T0498621	**KMR27001**	SI ABS
2.0 TDI	X		nov-15	6Q0407621AH	**KMR27102**	SI ABS
2.0 TDI		X	nov-15	6Q0598611	**KMR27103**	SI ABS
2.0 TFSI quattro	X		12-dic	1T0498621	**KMR27001**	SI ABS
2.0 TFSI quattro	X		12-dic	6Q0407621AH	**KMR27102**	SI ABS
S1 quattro	X		14-18	1T0498621	**KMR27001**	SI ABS
A1 CITY CARVER						
25 TFSI - 30 TFSI	X		19->	6Q0407621AH	**KMR27102**	SI ABS
A1 Sportback						
1.0 TFSI - 1.8 TFSI	X		15-18	6Q0407621AH	**KMR27102**	SI ABS
1.0 TFSI - 1.8 TFSI		X	15-18	6Q0598611	**KMR27103**	SI ABS
1.2 TFSI	X		dic-15	6Q0407621AH	**KMR27102**	SI ABS
1.2 TFSI	X		dic-15	1T0498621	**KMR27001**	SI ABS
1.2 TFSI		X	dic-15	6Q0598611	**KMR27103**	SI ABS
1.4 TDI - 1.4 TSI		X	14-18	6Q0598611	**KMR27103**	SI ABS
1.4 TDI - 1.4 TSI - S1 quattro	X		14-18	6Q0407621AH	**KMR27102**	SI ABS
1.4 TFSI - 1.6 TDI	X		nov-18	6Q0407621AH	**KMR27102**	SI ABS
1.4 TFSI - 1.6 TDI		X	nov-18	6Q0598611	**KMR27103**	SI ABS
1.4 TFSI - 1.6 TDI - 2.0 TDI	X		nov-15	1T0498621	**KMR27001**	SI ABS
2.0 TDI	X		nov-15	6Q0407621AH	**KMR27102**	SI ABS
2.0 TDI		X	nov-15	6Q0598611	**KMR27103**	SI ABS
25 TFSI - 30 TFSI - 35 TFSI	X		18->	6Q0407621AH	**KMR27102**	SI ABS
S1 quattro	X		14-18	1T0498621	**KMR27001**	SI ABS

follow AUDI

MODELLO MODEL	ASS.ANT. FRONT AXLE	ASS.POS. REAR AXLE	ANNO YEAR	RIF ORIGINALE ORIGINAL REF	RIF CORAM CORAM REF	NOTE NOTES
A2						
1.4 - 1.4 TDI	X		00-05	6Q0407621AH	**KMR27102**	SI ABS
1.4 - 1.4 TDI		X	00-05	6Q0598611	**KMR27103**	SI ABS
1.6 FSI	X		02-mag	6Q0407621AH	**KMR27102**	SI ABS
1.6 FSI		X	02-mag	6Q0598611	**KMR27103**	SI ABS

follow AUDI

MODELLO MODEL	ASS.ANT. FRONT AXLE	ASS.POS. REAR AXLE	ANNO YEAR	RIF ORIGINALE ORIGINAL REF	RIF CORAM CORAM REF	NOTE NOTES
A3						
1.0 TFSI	X		16->	1K0498621	**KMR27002**	SI ABS
1.0 TFSI		X	16-17	8V0598611A	**KMR27003**	SI ABS
1.2 TFSI	X		13-16	1K0498621	**KMR27002**	SI ABS
1.2 TFSI		X	13-16	8V0598611A	**KMR27003**	SI ABS
1.2 TSI	X		10-dic	1T0498621	**KMR27001**	SI ABS
1.2 TSI	X		10-dic	1K0498621	**KMR27002**	SI ABS
1.2 TSI		X	10-dic	8V0598611A	**KMR27003**	SI ABS
1.4 TFSI	X		07-dic	1T0498621	**KMR27001**	SI ABS
1.4 TFSI	X		lug-16	1K0498621	**KMR27002**	SI ABS
1.4 TFSI		X	lug-16	8V0598611A	**KMR27003**	SI ABS
1.4 TSI	X		14->	1K0498621	**KMR27002**	SI ABS
1.4 TSI		X	14-17	8V0598611A	**KMR27003**	SI ABS
1.5 TFSI	X		17->	1K0498621	**KMR27002**	SI ABS
1.5 TFSI		X	17-17	8V0598611A	**KMR27003**	SI ABS
1.6	X		03-dic	1K0498621	**KMR27002**	SI ABS
1.6		X	03-dic	8V0598611A	**KMR27003**	SI ABS
1.6 - 1.8 - 1.8 T - 1.8 T quattro - 1.9 TDI	X		96-03	1J0498625	**KCR27101**	SI ABS
1.6 - 1.8 - 1.8 T - 1.9 TDI		X	96-03	1J0598477	**KMR27201**	SI ABS
1.6 - 2.0 TDI - 2.0 TDI 16V	X		03-dic	1T0498621	**KMR27001**	SI ABS
1.6 FSI	X		03-lug	1T0498621	**KMR27001**	SI ABS
1.6 FSI	X		03-lug	1K0498621	**KMR27002**	SI ABS
1.6 FSI		X	03-lug	8V0598611A	**KMR27003**	SI ABS
1.6 TDI	X		09-dic	1T0498621	**KMR27001**	SI ABS
1.6 TDI	X		09->	1K0498621	**KMR27002**	SI ABS
1.6 TDI		X	set-20	8V0598611A	**KMR27003**	SI ABS
1.8 TFSI	X		06-dic	1T0498621	**KMR27001**	SI ABS
1.8 TFSI	X		giu-16	1K0498621	**KMR27002**	SI ABS
1.8 TFSI		X	giu-16	8V0598611A	**KMR27003**	SI ABS
1.8 TFSI quattro	X		08-dic	1T0498621	**KMR27001**	SI ABS
1.8 TFSI quattro	X		dic-16	1K0498621	**KMR27002**	SI ABS
1.9 TDI	X		03-ott	1T0498621	**KMR27001**	SI ABS
1.9 TDI	X		03-ott	1K0498621	**KMR27002**	SI ABS
1.9 TDI		X	03-ott	8V0598611A	**KMR27003**	SI ABS
1.9 TDI quattro	X		00-03	1J0498625	**KCR27101**	
2.0 FSI	X		03-ago	1K0498621	**KMR27002**	SI ABS
2.0 FSI		X	03-ago	8V0598611A	**KMR27003**	SI ABS
2.0 FSI - 2.0 TDI quattro	X		03-ago	1T0498621	**KMR27001**	SI ABS
2.0 TDI	X		mar-16	1K0498621	**KMR27002**	SI ABS
2.0 TDI	X		03->	1K0498621	**KMR27002**	SI ABS
2.0 TDI		X	mar-20	8V0598611A	**KMR27003**	SI ABS
2.0 TDI 16V quattro	X		04-dic	1T0498621	**KMR27001**	SI ABS
2.0 TFSI	X		04-dic	1K0498621	**KMR27002**	SI ABS
2.0 TFSI		X	04-dic	8V0598611A	**KMR27003**	SI ABS
2.0 TFSI		X	16-17	8V0598611A	**KMR27003**	SI ABS
2.0 TFSI - 2.0 TFSI quattro	X		04->	1T0498621	**KMR27001**	SI ABS

follow AUDI

MODELLO MODEL	ASS.ANT. FRONT AXLE	ASS.POS. REAR AXLE	ANNO YEAR	RIF ORIGINALE ORIGINAL REF	RIF CORAM CORAM REF	NOTE NOTES
A3 Cabriolet						
1.2 TFSI	X		ott-13	1T0498621	**KMR27001**	SI ABS
1.2 TFSI	X		ott-13	1K0498621	**KMR27002**	SI ABS
1.2 TFSI		X	ott-13	8V0598611A	**KMR27003**	SI ABS
1.4 TFSI	X		nov-13	1T0498621	**KMR27001**	SI ABS
1.4 TFSI	X		11->	1K0498621	**KMR27002**	SI ABS
1.4 TFSI		X	nov-20	8V0598611A	**KMR27003**	SI ABS
1.4 TSI	X		14->	1K0498621	**KMR27002**	SI ABS
1.4 TSI		X	14-20	8V0598611A	**KMR27003**	SI ABS
1.5 TFSI	X		17-18	1K0498621	**KMR27002**	SI ABS
1.5 TFSI		X	17-18	8V0598611A	**KMR27003**	SI ABS
1.6	X		08-ott	1T0498621	**KMR27001**	SI ABS
1.6	X		08-ott	1K0498621	**KMR27002**	SI ABS
1.6		X	08-ott	8V0598611A	**KMR27003**	SI ABS
1.6 TDI	X		set-13	1T0498621	**KMR27001**	SI ABS
1.6 TDI	X		09->	1K0498621	**KMR27002**	SI ABS
1.6 TDI		X	set-20	8V0598611A	**KMR27003**	SI ABS
1.8 TFSI - 2.0 TDI		X	ago-20	8V0598611A	**KMR27003**	SI ABS
1.8 TFSI - 2.0 TDI - 2.0 TFSI	X		ago-13	1T0498621	**KMR27001**	SI ABS
1.8 TFSI - 2.0 TDI - 2.0 TFSI	X		08->	1K0498621	**KMR27002**	SI ABS
1.8 TFSI quattro - 2.0 TDI quattro - 2.0 TFSI quattro	X	X	14->	1K0498621	**KMR27002**	SI ABS
1.9 TDI	X		08-set	1T0498621	**KMR27001**	SI ABS
1.9 TDI		X	08-set	8V0598611A	**KMR27003**	SI ABS
2.0 TFSI		X	ago-13	8V0598611A	**KMR27003**	SI ABS
2.0 TFSI		X	16-20	8V0598611A	**KMR27003**	SI ABS
35 TFSI - 40 TFSI	X		18->	1K0498621	**KMR27002**	SI ABS
36 TFSI - 40 TFSI		X	18-20	8V0598611A	**KMR27003**	SI ABS
S3 quattro	X	X	14->	1K0498621	**KMR27002**	SI ABS

follow AUDI

MODELLO MODEL	ASS.ANT. FRONT AXLE	ASS.POS. REAR AXLE	ANNO YEAR	RIF ORIGINALE ORIGINAL REF	RIF CORAM CORAM REF	NOTE NOTES
A3 Limousine						
1.0 TFSI	X		16-18	1K0498621	**KMR27002**	SI ABS
1.0 TFSI		X	16-20	8V0598611A	**KMR27003**	SI ABS
1.2 TFSI		X	13->	8V0598611A	**KMR27003**	SI ABS
1.2 TFSI - 1.4 TFSI - 1.6 TDI - 1.8 TFSI - 2.0 TDI	X		13->	1K0498621	**KMR27002**	SI ABS
1.4 TFSI - 1.6 TDI - 1.8 TFSI - 2.0 TDI		X	13-20	8V0598611A	**KMR27003**	SI ABS
1.4 TSI	X		14->	1K0498621	**KMR27002**	SI ABS
1.4 TSI		X	14-20	8V0598611A	**KMR27003**	SI ABS
1.5 TFSI	X		17-18	1K0498621	**KMR27002**	SI ABS
1.5 TFSI		X	17-18	8V0598611A	**KMR27003**	SI ABS
1.6 TDI quattro	X	X	15->	1K0498621	**KMR27002**	SI ABS
1.8 TFSI quattro - 2.0 TDI quattro	X	X	13->	1K0498621	**KMR27002**	SI ABS
2.0 TFSI	X		16->	1K0498621	**KMR27002**	SI ABS
2.0 TFSI		X	16-20	8V0598611A	**KMR27003**	SI ABS
2.0 TFSI quattro	X	X	16->	1K0498621	**KMR27002**	SI ABS
30 TDI - 30 TFSI - 35 TDI - 35 TFSI - 40 TFSI		X	18-20	8V0598611A	**KMR27003**	SI ABS
30 TFSI - 35 TDI	X		18->	1K0498621	**KMR27002**	SI ABS
40 TDI quattro	X	X	18-19	1K0498621	**KMR27002**	SI ABS
40 TFSI quattro	X	X	18->	1K0498621	**KMR27002**	SI ABS
RS3 quattro	X	X	17->	1K0498621	**KMR27002**	SI ABS
S3 quattro	X	X	13->	1K0498621	**KMR27002**	SI ABS

follow AUDI

MODELLO MODEL	ASS.ANT. FRONT AXLE	ASS.POS. REAR AXLE	ANNO YEAR	RIF ORIGINALE ORIGINAL REF	RIF CORAM CORAM REF	NOTE NOTES
A3 Sportback						
1.0 TFSI	X		16->	1K0498621	**KMR27002**	SI ABS
1.0 TFSI		X	16-20	8V0598611A	**KMR27003**	SI ABS
1.2 TFSI	X		13->	1K0498621	**KMR27002**	SI ABS
1.2 TFSI		X	13-16	8V0598611A	**KMR27003**	SI ABS
1.2 TFSI - 1.6	X		apr-13	1T0498621	**KMR27001**	SI ABS
1.2 TSI	X		ott-13	1K0498621	**KMR27002**	SI ABS
1.2 TSI		X	ott-13	8V0598611A	**KMR27003**	SI ABS
1.4 TFSI	X		lug-13	1T0498621	**KMR27001**	SI ABS
1.4 TFSI	X		07->	1K0498621	**KMR27002**	SI ABS
1.4 TFSI		X	lug-20	8V0598611A	**KMR27003**	SI ABS
1.4 TFSI e-tron - 1.4 TSI	X		14->	1K0498621	**KMR27002**	SI ABS
1.4 TFSI e-tron - 1.4 TSI		X	14-20	8V0598611A	**KMR27003**	SI ABS
1.4 TFSI g-tron	X		13->	1K0498621	**KMR27002**	SI ABS
1.4 TFSI g-tron		X	13-20	8V0598611A	**KMR27003**	SI ABS
1.5 TFSI	X		17->	1K0498621	**KMR27002**	SI ABS
1.5 TFSI		X	17-20	8V0598611A	**KMR27003**	SI ABS
1.6	X		apr-13	1K0498621	**KMR27002**	SI ABS
1.6		X	apr-13	8V0598611A	**KMR27003**	SI ABS
1.6 FSI	X		04-lug	1T0498621	**KMR27001**	SI ABS
1.6 FSI	X		04-lug	1K0498621	**KMR27002**	SI ABS
1.6 FSI		X	04-lug	8V0598611A	**KMR27003**	SI ABS
1.6 TDI	X		set-13	1T0498621	**KMR27001**	SI ABS
1.6 TDI	X		09->	1K0498621	**KMR27002**	SI ABS
1.6 TDI		X	set-20	8V0598611A	**KMR27003**	SI ABS
1.6 TDI quattro	X	X	15->	1K0498621	**KMR27002**	SI ABS
1.8 TFSI	X		giu-13	1K0498621	**KMR27002**	SI ABS
1.8 TFSI		X	giu-13	8V0598611A	**KMR27003**	SI ABS
1.8 TFSI - 2.0 TDI quattro	X		giu-13	1T0498621	**KMR27001**	SI ABS
1.8 TFSI quattro -	X	X	08->	1K0498621	**KMR27002**	SI ABS
1.8 TFSI quattro - S3 quattro	X		ago-13	1T0498621	**KMR27001**	SI ABS
1.9 TDI	X		04-ott	1T0498621	**KMR27001**	SI ABS
1.9 TDI	X		04-ott	1K0498621	**KMR27002**	SI ABS
1.9 TDI		X	04-ott	8V0598611A	**KMR27003**	SI ABS
2.0 FSI	X		04-ago	1T0498621	**KMR27001**	SI ABS
2.0 FSI	X		04-ago	1K0498621	**KMR27002**	SI ABS
2.0 FSI		X	04-ago	8V0598611A	**KMR27003**	SI ABS
2.0 TDI	X		mag-13	1T0498621	**KMR27001**	SI ABS
2.0 TDI	X		05->	1K0498621	**KMR27002**	SI ABS
2.0 TDI - 2.0 TFSI		X	apr-20	8V0598611A	**KMR27003**	SI ABS
2.0 TDI 16V	X		apr-13	1K0498621	**KMR27002**	SI ABS
2.0 TDI 16V		X	apr-13	8V0598611A	**KMR27003**	SI ABS
2.0 TDI 16V - 2.0 TFSI - 2.0 TFSI quattro	X		apr-13	1T0498621	**KMR27001**	SI ABS
2.0 TDI 16V quattro	X		mag-13	1T0498621	**KMR27001**	SI ABS
2.0 TDI quattro	X	X	13-18	1K0498621	**KMR27002**	SI ABS
2.0 TFSI	X		04->	1K0498621	**KMR27002**	SI ABS

follow AUDI

MODELLO MODEL	ASS.ANT. FRONT AXLE	ASS.POS. REAR AXLE	ANNO YEAR	RIF ORIGINALE ORIGINAL REF	RIF CORAM CORAM REF	NOTE NOTES
A4						
1.6 - 1.8	X		94-00	4B0498625	**KCR27102**	
1.6 - 1.8 T - 1.9 TDI - 2.0	X		00-08	4D0407625D	**KMR27004**	
1.6 - 1.8 T - 1.9 TDI - 2.0		X	00-08	8E0598611B	**KMR27005**	SI ABS
1.8 T - 1.9 TDI	X		95-00	4B0498625	**KCR27102**	
1.8 T quattro - 1.8 quattro	X	X	95-00	4B0498625	**KCR27102**	
1.8 T quattro - 2.5 TDI quattro - 3.0 quattro	X	X	00-08	4D0407625D	**KMR27004**	
1.8 TFSI quattro - 2.0 TDI quattro	X		ago-15	4H0498625	**KMR27101**	SI ABS
1.8TFSI - 2.0 TDI - 3.0 TDI quattro	X		lug-15	4H0498625	**KMR27101**	SI ABS
1.9 TDI quattro	X	X	96-00	4B0498625	**KCR27102**	
1.9 TDI quattro	X	X	01-apr	4D0407625D	**KMR27004**	
2.0 FSI	X		02-apr	4D0407625D	**KMR27004**	
2.0 TDI - 2.0 TDI 16V - 2.0 TFSI	X		04-ago	4D0407625D	**KMR27004**	
2.0 TDI - 2.0 TDI 16V - 2.0 TFSI		X	04-ago	8E0598611B	**KMR27005**	SI ABS
2.0 TDI quattro	X	X	06-ago	4D0407625D	**KMR27004**	
2.0 TFSI		X	02-apr	8E0598611B	**KMR27005**	SI ABS
2.0 TFSI - 2.0 TFSI quattro - S4 quattro	X		ago-15	4H0498625	**KMR27101**	SI ABS
2.0 TFSI flexible fuel - 2.0 TFSI flexible fuel quattro	X		set-15	4H0498625	**KMR27101**	SI ABS
2.0 TFSI quattro - 3.0 TDI quattro - S4 quattro	X	X	04-ago	4D0407625D	**KMR27004**	
2.4		X	01-apr	8E0598611B	**KMR27005**	SI ABS
2.4 - 2.5 TDI	X		01-apr	4D0407625D	**KMR27004**	
2.4 quattro - 2.5 TDI quattro		X	97-00	4B0498625	**KCR27102**	
2.5 TDI		X	01-giu	8E0598611B	**KMR27005**	SI ABS
2.5 TDI	X		01-giu	4D0407625D	**KMR27004**	
2.6 quattro		X	95-00	4B0498625	**KCR27102**	
2.7 TDI	X		07-dic	4H0498625	**KMR27101**	SI ABS
2.7 TDI - 3.2 FSI	X		05-ago	4D0407625D	**KMR27004**	
2.7 TDI - 3.2 FSI		X	05-ago	8E0598611B	**KMR27005**	SI ABS
2.8 quattro		X	95-01	4B0498625	**KCR27102**	
3.0	X		00-04	4D0407625D	**KMR27004**	
3.0		X	00-04	8E0598611B	**KMR27005**	SI ABS
3.0 quattro	X	X	04-giu	4D0407625D	**KMR27004**	
3.0 TDI	X		nov-15	4H0498625	**KMR27101**	SI ABS
3.0 TFSI quattro	X		dic-15	4H0498625	**KMR27101**	SI ABS
3.2 FSI	X		08-dic	4H0498625	**KMR27101**	SI ABS
3.2 FSI quattro	X		07-dic	4H0498625	**KMR27101**	SI ABS
3.2 FSI quattro - RS4 quattro	X	X	05-ago	4D0407625D	**KMR27004**	
S4 quattro		X	97-01	4B0498625	**KCR27102**	
S4 quattro	X	X	03-apr	4D0407625D	**KMR27004**	

follow AUDI

MODELLO MODEL	ASS.ANT. FRONT AXLE	ASS.POS. REAR AXLE	ANNO YEAR	RIF ORIGINALE ORIGINAL REF	RIF CORAM CORAM REF	NOTE NOTES
A4 Allroad						
1.8 TFSI - 1.8 TFSI quattro - 2.0 TDI - 2.0 TDI quattro	X		ago-15	4H0498625	**KMR27101**	SI ABS
2.0 TDI quattro - 2.0 TFSI quattro - 3.0 TDI quattro	X		set-16	4H0498625	**KMR27101**	SI ABS
2.0 TFSI - 2.0 TFSI quattro	X		ago-15	4H0498625	**KMR27101**	SI ABS
2.0 TFSI flexible fuel - 2.0 TFSI flexible fuel quattro	X		set-15	4H0498625	**KMR27101**	SI ABS
2.7 TDI - 3.2 FSI - 3.2 FSI quattro	X		08-dic	4H0498625	**KMR27101**	SI ABS
3.0 TDI	X		nov-15	4H0498625	**KMR27101**	SI ABS
3.0 TDI quattro - S4 quattro	X		ago-15	4H0498625	**KMR27101**	SI ABS
3.0 TFSI quattro - RS4 quattro	X		dic-15	4H0498625	**KMR27101**	SI ABS
A4 Avant						
1.6	X		94-01	4B0498625	**KCR27102**	
1.6 - 1.8 T - 1.9 TDI - 2.0	X		01-ago	4D0407625D	**KMR27004**	
1.6 - 1.8 T - 1.9 TDI - 2.0 - 2.4 - 2.5 TDI - 3.0		X	01-ago	8E0598611B	**KMR27005**	SI ABS
1.8 - 1.8 T - 1.9 TDI	X		96-01	4B0498625	**KCR27102**	
1.8 T quattro	X	X	01-ago	4D0407625D	**KMR27004**	
1.8 T quattro - 1.8 quattro - 1.9 TDI quattro	X	X	96-01	4B0498625	**KCR27102**	
1.9 DUO	X		98-01	4B0498625	**KCR27102**	
2.0 FSI	X		02-apr	4D0407625D	**KMR27004**	
2.0 FSI		X	02-apr	8E0598611B	**KMR27005**	SI ABS
2.0 TDI - 2.0 TDI 16V - 2.0 TFSI	X		04-ago	4D0407625D	**KMR27004**	
2.0 TDI - 2.0 TDI 16V - 2.0 TFSI		X	04-ago	8E0598611B	**KMR27005**	SI ABS
2.0 TDI quattro	X	X	06-ago	4D0407625D	**KMR27004**	
2.0 TFSI quattro - 3.0 TDI quattro - S4 quattro	X	X	04-ago	4D0407625D	**KMR27004**	
2.4	X		01-apr	4D0407625D	**KMR27004**	
2.4 - 2.5 TDI		X	01-apr	8E0598611B	**KMR27005**	SI ABS
2.4 quattro - 2.5 TDI quattro		X	97-01	4B0498625	**KCR27102**	
2.5 TDI		X	04-giu	8E0598611B	**KMR27005**	SI ABS
2.5 TDI - 3.0	X		01-giu	4D0407625D	**KMR27004**	
2.6 quattro - 2.8 quattro		X	96-01	4B0498625	**KCR27102**	
2.7 TDI	X		06-ago	4D0407625D	**KMR27004**	
2.7 TDI		X	05-ago	8E0598611B	**KMR27005**	SI ABS
2.7 TDi - 3.2 FSI	X		05-ago	4D0407625D	**KMR27004**	
2.7 TDi - 3.2 FSI		X	05-ago	8E0598611B	**KMR27005**	SI ABS
3.0		X	01-giu	8E0598611B	**KMR27005**	SI ABS
3.0 quattro	X	X	04-giu	4D0407625D	**KMR27004**	
3.2 FSI quattro - RS4 quattro	X	X	05-ago	4D0407625D	**KMR27004**	
RS4 quattro		X	00-01	4B0498625	**KCR27102**	
S4 quattro		X	97-01	4B0498625	**KCR27102**	
S4 quattro	X	X	03-apr	4D0407625D	**KMR27004**	

follow AUDI

MODELLO MODEL	ASS.ANT. FRONT AXLE	ASS.POS. REAR AXLE	ANNO YEAR	RIF ORIGINALE ORIGINAL REF	RIF CORAM CORAM REF	NOTE NOTES
A4 Cabriolet						
1.8 T - 2.4		X	02-mag	8E0598611B	**KMR27005**	SI ABS
1.8 T - 2.4 - 2.5 TDI - 3.0	X		02-mag	4D0407625D	**KMR27004**	
2.0		X	04-mag	8E0598611B	**KMR27005**	SI ABS
2.0 - S4 quattro	X		04-mag	4D0407625D	**KMR27004**	
2.0 TDI - 2.0 TFSI 16V - 2.7 TDI - 3.2 FSI	X		06-set	4D0407625D	**KMR27004**	
2.0 TDI - 2.0 TFSI 16V - 2.7 TDI - 3.2 FSI		X	06-set	8E0598611B	**KMR27005**	SI ABS
3.0 quattro	X		04-mag	4D0407625D	**KMR27004**	
3.0 TDI quattro - 3.2 FSI quattro	X	X	06-set	4D0407625D	**KMR27004**	
RS4 quattro	X	X	06-set	4D0407625D	**KMR27004**	
A5						
1.8 TFSI - 3.0 TDI quattro	X		lug-17	4H0498625	**KMR27101**	SI ABS
2.0 TDI - 2.0 TDI quattro - 2.0 TFSI - 2.0 TFSI quattro	X		ago-17	4H0498625	**KMR27101**	SI ABS
2.7 TDI - 3.2 FSI - 3.2 FSI quattro	X		07-dic	4H0498625	**KMR27101**	SI ABS
3.0 TDI - 3.0 TFSI quattro - S5 quattro	X		nov-17	4H0498625	**KMR27101**	SI ABS
RS5 quattro	X		ott-17	4H0498625	**KMR27101**	SI ABS
A5 Cabriolet						
1.8 TFSI - 2.0 TDI - 2.0 TFSI - 2.0 TFSI quattro	X		set-17	4H0498625	**KMR27101**	SI ABS
2.0 TDI quattro	X		dic-17	4H0498625	**KMR27101**	SI ABS
2.7 TDI - 3.2 FSI - 3.2 FSI quattro	X		09-dic	4H0498625	**KMR27101**	SI ABS
3.0 TDI - 3.0 TFSI quattro	X		nov-17	4H0498625	**KMR27101**	SI ABS
3.0 TDI quattro - S5 quattro	X		set-17	4H0498625	**KMR27101**	SI ABS
RS5 quattro	X		dic-15	4H0498625	**KMR27101**	SI ABS
A5 Sportback						
1.8 TFSI - 2.0 TDI - 2.0 TDI quattro - 2.0 TFSI	X		set-17	4H0498625	**KMR27101**	SI ABS
2.0 TFSI quattro - 3.0 TDI quattro	X		set-17	4H0498625	**KMR27101**	SI ABS
2.7 TDI - 3.2 FSI quattro	X		09-dic	4H0498625	**KMR27101**	SI ABS
3.0 TDI - 3.0 TFSI quattro	X		nov-17	4H0498625	**KMR27101**	SI ABS
S5 quattro	X		ott-17	4H0498625	**KMR27101**	SI ABS

follow AUDI

MODELLO MODEL	ASS.ANT. FRONT AXLE	ASS.POS. REAR AXLE	ANNO YEAR	RIF ORIGINALE ORIGINAL REF	RIF CORAM CORAM REF	NOTE NOTES
A6						
1.8 - 1.8 T - 1.8 T quattro	X		97-05	4B0498625	**KCR27102**	
1.8 - 1.8 T - 1.8 T quattro - 2.4 - 2.4 quattro	X		97-05	4D0407625D	**KMR27004**	
1.8 TFSI	X		14-18	4H0498625	**KMR27101**	SI ABS
1.9 TDI	X		00-05	4D0407625D	**KMR27004**	
2.0 - 3.0 - 3.0 quattro	X		01-mag	4D0407625D	**KMR27004**	
2.0 TDI - 2.0 TDI quattro	X		15-18	4H0498625	**KMR27101**	SI ABS
2.0 TFSI - 2.0 TFSI hybrid - 3.0 TDI quattro	X		nov-18	4H0498625	**KMR27101**	SI ABS
2.0 TFSI quattro - S6 quattro	X		dic-18	4H0498625	**KMR27101**	SI ABS
2.5 TDI - 2.5 TDI quattro - 2.7 T quattro	X		97-05	4D0407625D	**KMR27004**	
2.7 T	X		99-05	4D0407625D	**KMR27004**	
2.8 - 2.8 quattro	X		97-05	4D0407625D	**KMR27004**	
2.8 FSI	X		ott-15	4H0498625	**KMR27101**	SI ABS
2.8 FSI quattro - 3.0 TDI - 3.0 TFSI quattro	X		ott-18	4H0498625	**KMR27101**	SI ABS
4.2 quattro	X	X	98-05	4D0407625D	**KMR27004**	
RS6 quattro	X		02-mag	4D0407625D	**KMR27004**	
S6 quattro	X	X	99-05	4D0407625D	**KMR27004**	
A6 Allroad						
3.0 TDI quattro - 3.0 TFSI quattro	X		dic-18	4H0498625	**KMR27101**	SI ABS
A6 Avant						
1.8 - 1.8 T - 1.8 T quattro	X		97-05	4B0498625	**KCR27102**	
1.8 - 1.8 T - 1.8 T quattro - 2.4 - 2.4 quattro	X		97-05	4D0407625D	**KMR27004**	
1.8 TFSI	X		14-18	4H0498625	**KMR27101**	SI ABS
1.9 TDI	X		00-05	4D0407625D	**KMR27004**	
2.0 - 3.0 - 3.0 quattro	X		01-mag	4D0407625D	**KMR27004**	
2.0 TDI - 2.0 TFSI - 2.8 FSI quattro	X		nov-18	4H0498625	**KMR27101**	SI ABS
2.0 TDI quattro - 2.0 TFSI quattro	X		15-18	4H0498625	**KMR27101**	SI ABS
2.5 TDI - 2.5 TDI quattro - 2.7 T quattro	X		97-05	4D0407625D	**KMR27004**	
2.7 T	X		99-05	4D0407625D	**KMR27004**	
2.8 - 2.8 quattro	X		97-05	4D0407625D	**KMR27004**	
2.8 FSI	X		nov-15	4H0498625	**KMR27101**	SI ABS
3.0 TDI - 3.0 TDI quattro - 3.0 TFSI quattro	X		nov-18	4H0498625	**KMR27101**	SI ABS
4.2 quattro	X	X	98-05	4D0407625D	**KMR27004**	
RS6 performance quattro	X		15-18	4H0498625	**KMR27101**	SI ABS
RS6 plus quattro	X		04-mag	4D0407625D	**KMR27004**	
RS6 quattro	X		13-18	4H0498625	**KMR27101**	SI ABS
RS6 quattro	X		02-mag	4D0407625D	**KMR27004**	
S6 quattro	X		dic-18	4H0498625	**KMR27101**	SI ABS
S6 quattro	X	X	99-05	4D0407625D	**KMR27004**	

follow AUDI

MODELLO MODEL	ASS.ANT. FRONT AXLE	ASS.POS. REAR AXLE	ANNO YEAR	RIF ORIGINALE ORIGINAL REF	RIF CORAM CORAM REF	NOTE NOTES
A7 Sportback						
1.8 TFSI - 2.0 TFSI quattro - RS7 performance quattro	X		15-18	4H0498625	**KMR27101**	SI ABS
2.0 TFSI	X		14-18	4H0498625	**KMR27101**	SI ABS
2.8 FSI	X		nov-15	4H0498625	**KMR27101**	SI ABS
2.8 FSI quattro	X		ott-15	4H0498625	**KMR27101**	SI ABS
3.0 TDI - 3.0 TDI quattro - 3.0 TFSI quattro	X		ott-18	4H0498625	**KMR27101**	SI ABS
55 TFSI Mild Hybrid quattro	X		17->	4H0498625	**KMR27101**	SI ABS
RS7 quattro	X		13-18	4H0498625	**KMR27101**	SI ABS
S7 quattro	X		dic-18	4H0498625	**KMR27101**	SI ABS
A8						
2.0 TFSI Hybrid - 4.0 TFSI quattro	X		dic-15	4H0498625	**KMR27101**	SI ABS
2.5 TDI - 2.5 TDI quattro	X	X	97-02	4D0407625D	**KMR27004**	
2.5 TFSI	X		dic-16	4H0498625	**KMR27101**	SI ABS
2.8 - 2.8 quattro - S8 quattro	X	X	96-02	4D0407625D	**KMR27004**	
3.0 TDI	X		nov-13	4H0498625	**KMR27101**	SI ABS
3.0 TDI quattro - 3.0 TFSI quattro	X		ott-18	4H0498625	**KMR27101**	SI ABS
3.3 TDI quattro	X	X	00-02	4D0407625D	**KMR27004**	
3.7 - 3.7 quattro - 4.2 quattro	X	X	98-02	4D0407625D	**KMR27004**	
4.2 FSI	X		09-dic	4H0498625	**KMR27101**	SI ABS
4.2 quattro	X	X	98-02	4D0407625D	**KMR27004**	
4.2 TDI quattro	X		set-18	4H0498625	**KMR27101**	SI ABS
6.0 W12 quattro		X	01-feb	4D0407625D	**KMR27004**	
6.3 W12 quattro	X		nov-18	4H0498625	**KMR27101**	SI ABS
S8 plus quattro	X		15-18	4H0498625	**KMR27101**	SI ABS
S8 quattro	X		dic-18	4H0498625	**KMR27101**	SI ABS
CABRIOLET						
1.8	X		97-00	4B0498625	**KCR27102**	
1.9 TDI	X		95-00	4B0498625	**KCR27102**	
2.0 16V	X		95-96	4B0498625	**KCR27102**	
2.0 E	X		93-98	4B0498625	**KCR27102**	
2.3 E	X		91-94	4B0498625	**KCR27102**	

follow AUDI

MODELLO MODEL	ASS.ANT. FRONT AXLE	ASS.POS. REAR AXLE	ANNO YEAR	RIF ORIGINALE ORIGINAL REF	RIF CORAM CORAM REF	NOTE NOTES
COUPE						
1.8 - 2.0 20 V	X		89-91	4B0498625	**KCR27102**	
2.0	X		89-96	4B0498625	**KCR27102**	
2.0 16V	X		92-96	4B0498625	**KCR27102**	
2.0 20 V quattro	X	X	89-91	4B0498625	**KCR27102**	
2.2 quattro		X	88-91	4B0498625	**KCR27102**	
2.3 20V quattro		X	88-96	4B0498625	**KCR27102**	
2.3 quattro	X	X	88-96	4B0498625	**KCR27102**	
2.6 quattro		X	92-96	4B0498625	**KCR27102**	
2.8 quattro		X	91-96	4B0498625	**KCR27102**	
COUPE B2						
1.6		X	80-81	191598625	**KCR529**	
1.8		X	81-83	191598625	**KCR529**	
1.8 GT		X	82-88	191598625	**KCR529**	
1.9		X	80-83	191598625	**KCR529**	
2.0		X	83-88	191598625	**KCR529**	
2.1 GT		X	82-87	191598625	**KCR529**	
2.2 GT		X	81-88	191598625	**KCR529**	
2.3		X	86-87	191598625	**KCR529**	
Q2						
1.0 TFSI - 1.4 TFSI - 2.0 TDI - 35 TDI		X	16->	8V0598611A	**KMR27003**	SI ABS
1.6 TDI		X	16-18	8V0598611A	**KMR27003**	SI ABS
2.0 TDI quattro		X	16->	1K0498621	**KMR27002**	SI ABS
30 TDI 30 TFSI - 35 TFSI		X	18->	8V0598611A	**KMR27003**	SI ABS
SQ2 TFSI quattro		X	18->	1K0498621	**KMR27002**	SI ABS
Q3						
1.4 TFSI	X		16-18	1T0498621	**KMR27001**	SI ABS
1.4 TSI - RS 2.5 quattro	X		13-18	1T0498621	**KMR27001**	SI ABS
2.0 TDI - 2.0 TDI quattro - 2.0 TFSI quattro	X		nov-18	1T0498621	**KMR27001**	SI ABS
2.0 TFSI - RS performance 2.5 quattro	X		15-18	1T0498621	**KMR27001**	SI ABS
35 TDI quattro - 40 TDI quattro - 45 TFSI quattro		X	18->	1K0498621	**KMR27002**	SI ABS
Q3 Sportback						
2.5 RS quattro - 35 TDI quattro - 40 TDI quattro		X	19->	1K0498621	**KMR27002**	SI ABS
45 TFSI quattro		X	19->	1K0498621	**KMR27002**	SI ABS

follow AUDI

MODELLO MODEL	ASS.ANT. FRONT AXLE	ASS.POS. REAR AXLE	ANNO YEAR	RIF ORIGINALE ORIGINAL REF	RIF CORAM CORAM REF	NOTE NOTES
Q5						
2.0 TDI	X		ott-17	1T0498621	**KMR27001**	SI ABS
2.0 TDI quattro - 3.0 TDI quattro - 3.0 TFSI quattro	X		ago-17	1T0498621	**KMR27001**	SI ABS
2.0 TFSI hyberid quattro	X		nov-16	1T0498621	**KMR27001**	SI ABS
2.0 TFSI quattro	X		set-17	1T0498621	**KMR27001**	SI ABS
3.2 FSI quattro	X		08-dic	1T0498621	**KMR27001**	SI ABS
SQ5 TDI quattro	X		dic-17	1T0498621	**KMR27001**	SI ABS
SUPER 90						
1.8		X	66-71	191598625	**KCR529**	
TT						
1.8 T		X	98-06	1J0498625	**KCR27101**	SI ABS
1.8 T - 1.8 T quattro	X		98-06	1J0498625	**KCR27101**	
1.8 TFSI	X		ago-14	1T0498621	**KMR27001**	SI ABS
2.0 TDI quattro		X	17->	1K0498621	**KMR27002**	SI ABS
2.0 TDI quattro - 2.0 TFSI quattro - 2.0 TTS quattro	X	X	ago-14	1T0498621	**KMR27001**	SI ABS
2.0 TFSI	X		giu-14	1T0498621	**KMR27001**	SI ABS
2.0 TFSI quattro - 2.0 TTS quattro		X	14->	1K0498621	**KMR27002**	SI ABS
2.5 RS quattro	X	X	set-14	1T0498621	**KMR27001**	SI ABS
2.5 RS quattro		X	16->	1K0498621	**KMR27002**	SI ABS
3.2 V6 quattro	X	X	06-ott	1T0498621	**KMR27001**	SI ABS
3.2 VR6 quattro	X		03-giu	1J0498625	**KCR27101**	
45 TFSI quattro		X	18->	1K0498621	**KMR27002**	SI ABS
TT Roadster						
1.8 quattro	X	X	99-06	1J0498625	**KCR27101**	
1.8 T	X		99-06	1J0498625	**KCR27101**	
1.8 T		X	99-06	1J0498625	**KCR27101**	SI ABS
1.8 TFSI	X		ago-14	1T0498621	**KMR27001**	SI ABS
2.0 TDI quattro		X	17->	1K0498621	**KMR27002**	SI ABS
2.0 TDI quattro - 2.0 TFSI quattro - 2.0 TTS quattro	X	X	lug-14	1T0498621	**KMR27001**	SI ABS
2.0 TFSI	X		lug-14	1T0498621	**KMR27001**	SI ABS
2.0 TFSI quattro - 2.0 TTS quattro		X	14->	1K0498621	**KMR27002**	SI ABS
2.5 RS quattro	X	X	set-14	1T0498621	**KMR27001**	SI ABS
2.5 RS quattro		X	16->	1K0498621	**KMR27002**	SI ABS
3.2 V6 quattro	X	X	07-ott	1T0498621	**KMR27001**	SI ABS
3.2 VR6 quattro		X	03-giu	1J0498625	**KCR27101**	
45 TFSI quattro		X	18->	1K0498621	**KMR27002**	SI ABS

BMW

MODELLO MODEL	ASS.ANT. FRONT AXLE	ASS.POS. REAR AXLE	ANNO YEAR	RIF ORIGINALE ORIGINAL REF	RIF CORAM CORAM REF	NOTE NOTES
1						
116 d		X	08-nov	33416762317	**KCR01002**	
116 i - 118 d - 118 i - 120 d - 120 i		X	04-nov	33416762317	**KCR01002**	
123d		X	07-nov	33412406278	**KCR01001**	SI ABS
130 i		X	05-nov	33412406278	**KCR01001**	SI ABS
1 Cabriolet						
118 d - 118 i - 120 d - 120 i		X	ago-13	33416762317	**KCR01002**	
123 d - 135 i		X	ago-13	33412406278	**KCR01001**	SI ABS
125 i		X	lug-13	33416762317	**KCR01002**	
1 Coupé						
118 d		X	set-13	33416762317	**KCR01002**	
120 d - 120 i		X	lug-13	33416762317	**KCR01002**	
123 d - 135 i		X	lug-13	33412406278	**KCR01001**	SI ABS
125 i		X	ago-13	33416762317	**KCR01002**	
M		X	11-dic	33412406278	**KCR01001**	SI ABS
3						
320 d - 330 i		X	04-nov	33412406278	**KCR01001**	SI ABS
320 d xDrive - 325 i xDrive - 330 d xDrive		X	08-nov	33412406278	**KCR01001**	SI ABS
320 si		X	05-giu	33412406278	**KCR01001**	SI ABS
325 d - 335 d - 335 i		X	06-nov	33412406278	**KCR01001**	SI ABS
325 i - M3		X	07-nov	33412406278	**KCR01001**	SI ABS
325 xi - 335 xi		X	07-ago	33412406278	**KCR01001**	SI ABS
330 d		X	05-nov	33412406278	**KCR01001**	SI ABS
330 i xDrive - 335 i xDrive		X	08-nov	33412406278	**KCR01001**	SI ABS
330 xd - 330 xi		X	05-ago	33412406278	**KCR01001**	SI ABS
M3 CRT		X	11-nov	33412406278	**KCR01001**	SI ABS
3 Cabriolet						
318 i		X	ott-13	33416762317	**KCR01002**	
320 d - M3		X	ago-13	33412406278	**KCR01001**	SI ABS
320 i		X	lug-13	33416762317	**KCR01002**	
320 i - 325 d - 325 i - 330 d - 330 i		X	lug-13	33412406278	**KCR01001**	SI ABS
335 i		X	giu-13	33412406278	**KCR01001**	SI ABS

follow BMW

MODELLO MODEL	ASS.ANT. FRONT AXLE	ASS.POS. REAR AXLE	ANNO YEAR	RIF ORIGINALE ORIGINAL REF	RIF CORAM CORAM REF	NOTE NOTES
3 Coupé						
316 i - 320 i		X	lug-13	33416762317	**KCR01002**	
318 i		X	ott-13	33416762317	**KCR01002**	
320 d - 325 i		X	giu-13	33416762317	**KCR01002**	
320 d xDrive - 325 i xDrive - 335 i xDrive		X	ago-13	33412406278	**KCR01001**	SI ABS
325 d - M GTS - M3		X	lug-13	33412406278	**KCR01001**	SI ABS
325 xi - 330 xd - 330 xi		X	06-ott	33412406278	**KCR01001**	SI ABS
330 d - 330 i - 335 d - 335 i		X	giu-13	33412406278	**KCR01001**	SI ABS
330 d xDrive - 330 i xDrive		X	ott-13	33412406278	**KCR01001**	SI ABS
335 xi		X	07-ott	33412406278	**KCR01001**	SI ABS
3 Touring						
316 d		X	09-dic	33412406278	**KCR01001**	SI ABS
316 d		X	09-dic	33416762317	**KCR01002**	
318 d - 320 d - 320 i		X	05-dic	33416762317	**KCR01002**	
318 d - 320 i - 330 i - 330 xd - 330 xi		X	05-dic	33412406278	**KCR01001**	SI ABS
318 i		X	06-dic	33416762317	**KCR01002**	
318 i - 325 d - 335 d - 335 i		X	06-dic	33412406278	**KCR01001**	SI ABS
320 d - 325 i - 330 d		X	04-dic	33412406278	**KCR01001**	SI ABS
320 d xDrive - 325 i xDrive - 335 i xDrive		X	08-dic	33412406278	**KCR01001**	SI ABS
323 i		X	06-ago	33412406278	**KCR01001**	SI ABS
325 xi		X	05-ago	33412406278	**KCR01001**	SI ABS
330 d xDrive		X	09-dic	33412406278	**KCR01001**	SI ABS
330 i xDrive		X	07-dic	33412406278	**KCR01001**	SI ABS
335 xi		X	07-ago	33412406278	**KCR01001**	SI ABS
Z4 Coupè						
3.0 si		X	06-ago	33416762317	**KCR01002**	
Z4 Roadster						
2.0 i		X	05-set	33416762317	**KCR01002**	
2.2 i		X	03-mag	33416762317	**KCR01002**	
2.5 i		X	02-set	33416762317	**KCR01002**	
2.5 si		X	06-ago	33416762317	**KCR01002**	
3.0 i		X	02-mag	33416762317	**KCR01002**	
3.0 si		X	06-ago	33416762317	**KCR01002**	
sDrive 18 i		X	13-16	33416762317	**KCR01002**	
sDrive 20 i - sDrive 28 i		X	nov-16	33416762317	**KCR01002**	
sDrive 23 i - sDrive 30 i		X	09-nov	33416762317	**KCR01002**	
sDrive 35 i		X	set-16	33416762317	**KCR01002**	
sDrive 35 is		X	ott-16	33416762317	**KCR01002**	

CHEVROLET						
MODELLO MODEL	ASS.ANT. FRONT AXLE	ASS.POS. REAR AXLE	ANNO YEAR	RIF ORIGINALE ORIGINAL REF	RIF CORAM CORAM REF	NOTE NOTES
AVEO						
1.2	X		04->	94535249	**KCR11103**	
1.4	X		05->	94535249	**KCR11103**	
1.4 16V	X		03-ago	94535249	**KCR11103**	
CRUZE						
1.4	X		10->	13502829	**KMR20009**	
1.6 - 1.8	X		09->	13502829	**KMR20009**	
1.7 D	X		12->	13502829	**KMR20009**	
1.7 TD	X		13->	13502829	**KMR20009**	
1.8 LPG	X		11->	13502829	**KMR20009**	
2.0 CDI	X		09-nov	13502829	**KMR20009**	
CRUZE 2 volumi						
1.4 - 1.7 D	X		dic-15	13502829	**KMR20009**	
1.6 - 1.8 - 2.0 CDI	X		11->	13502829	**KMR20009**	
1.7 TD	X		13-15	13502829	**KMR20009**	
1.8 LPG	X		nov-15	13502829	**KMR20009**	
CRUZE Station wagon						
1.4 - 1.6 - 1.7 TD	X		dic-15	13502829	**KMR20009**	
1.8 - 2.0 TD	X		12->	13502829	**KMR20009**	
KALOS 2 volumi						
1.2	X		04->	94535249	**KCR11103**	
1.4	X		05->	94535249	**KCR11103**	
KALOS tre volumi						
1.2	X		04->	94535249	**KCR11103**	
1.2 LPG	X		09->	94535249	**KCR11103**	
1.4	X		05->	94535249	**KCR11103**	
MALIBU						
2.0 D - 2.4		X	12->	13502785	**KMR20008**	SI ABS

follow CHEVROLET

MODELLO MODEL	ASS.ANT. FRONT AXLE	ASS.POS. REAR AXLE	ANNO YEAR	RIF ORIGINALE ORIGINAL REF	RIF CORAM CORAM REF	NOTE NOTES
MATIZ						
0.8	X		mag-13	96285525	**KCR11101**	
0.8		X	mag-13	96316634	**KCR11102**	
0.8 LPG	X		05->	96285525	**KCR11101**	
0.8 LPG		X	05->	96316634	**KCR11102**	
1.0	X		05-lug	96285525	**KCR11101**	
1.0		X	05-lug	96316634	**KCR11102**	
1.0 LPG	X		05-nov	96285525	**KCR11101**	
1.0 LPG		X	05-nov	96316634	**KCR11102**	
ORLANDO						
1.4 - 1.6 - 1.7 TD	X		12->	13502829	**KMR20009**	
1.8	X		11->	13502829	**KMR20009**	
1.8 LPG - 2.0 D	X		nov-15	13502829	**KMR20009**	
SPARK						
0.8	X		05-ott	96285525	**KCR11101**	
0.8		X	05-ott	96316634	**KCR11102**	
1.0 - 1.0 LPG - 1.2 - 1.2 LPG	X		10->	94535249	**KCR11103**	
1.0 SX	X		05->	96285525	**KCR11101**	
1.0 SX		X	05->	96316634	**KCR11102**	

CITROEN

MODELLO MODEL	ASS.ANT. FRONT AXLE	ASS.POS. REAR AXLE	ANNO YEAR	RIF ORIGINALE ORIGINAL REF	RIF CORAM CORAM REF	NOTE NOTES
AX						
1.4 Gti		X	91-96	3730.21	**KCR10103**	
BERLINGO Furgonato						
1.6 - 1.6 Hdi 110 - 1.6 Hdi 75 - 1.6 Hdi 90 16V	X		08->	1606623580	**KCR10002**	SI ABS
1.6 BlueHDi 100 - 1.6 BlueHDi 100 4x4	X		14->	1606623580	**KCR10002**	SI ABS
1.6 BlueHDi 120	X		14->	1606623580	**KCR10002**	SI ABS
1.6 Hdi 75 4x4 - 1.6 Hdi 90 4x4	X		12->	1606623580	**KCR10002**	SI ABS
1.6 Hdi/BlueHDi 75 - 1.6 Hdi 1115 - 1.6 Hdi 90	X		10->	1606623580	**KCR10002**	SI ABS
1.6 Vti 120	X		09->	1606623580	**KCR10002**	SI ABS
1.6 Vti 95	X		10->	1606623580	**KCR10002**	SI ABS
Electric	X		13->	1606623580	**KCR10002**	SI ABS

follow CITROEN

MODELLO MODEL	ASS.ANT. FRONT AXLE	ASS.POS. REAR AXLE	ANNO YEAR	RIF ORIGINALE ORIGINAL REF	RIF CORAM CORAM REF	NOTE NOTES
BERLINGO MULTISPACE						
1.2 PureTech 110	X		16->	1606623580	**KCR10002**	SI ABS
1.6 - 1.6 Hdi 90 - 1.6 Hdi 110 - 1.6 Hdi 115	X		08->	1606623580	**KCR10002**	SI ABS
1.6 BlueHDi 100 - 1.6 BlueHDi 120	X		14->	1606623580	**KCR10002**	SI ABS
1.6 Hdi 115 4x4	X		12->	1606623580	**KCR10002**	SI ABS
1.6 Hdi 4x4	X		dic-14	1606623580	**KCR10002**	SI ABS
1.6 Hdi 75 / BlueHDi 75 - 1.6 Hdi 75 16V	X		08->	1606623580	**KCR10002**	SI ABS
1.6 Vti 120	X		09->	1606623580	**KCR10002**	SI ABS
1.6 Vti 95	X		10->	1606623580	**KCR10002**	SI ABS
BERLINGO Pianale piatto						
1.6 BlueHDi 100	X		14->	1606623580	**KCR10002**	SI ABS
1.6 Hdi 90 - 1.6 Hdi 92	X		10->	1606623580	**KCR10002**	SI ABS
1.6 Hdi 90 16V	X		08->	1606623580	**KCR10002**	SI ABS
C1						
1.0 - 1.4 Hdi	X		mag-14	6822.JL	**KCR26001**	SI ABS
1.0 - 1.4 Hdi		X	mag-14	3748.85	**KMR10001**	
C1 II						
1.0 Vti 68 - 1.2 Vti 82	X		14->	6822.JL	**KCR26001**	SI ABS
1.0 Vti 68 - 1.2 Vti 82		X	14->	3748.85	**KMR10001**	
1.0 Vti 72	X		18->	6822.JL	**KCR26001**	SI ABS
1.0 Vti 72		X	18->	3748.85	**KMR10001**	
C2						
1.1	X		03-dic	3350.72	**KCR10001**	SI ABS
1.1		X	03-dic	3730.21	**KCR10005**	
1.1	X		03-dic	3350.32	**KCR10004**	
1.4 - 1.4 Hdi	X		03-set	3350.72	**KCR10001**	SI ABS
1.4 - 1.4 Hdi		X	03-set	3730.21	**KCR10005**	
1.4 - 1.4 Hdi	X		03-set	3350.32	**KCR10004**	
1.4 16V - 1.6 Hdi	X		05-set	3350.72	**KCR10001**	SI ABS
1.4 16V - 1.6 Hdi		X	05-set	3730.21	**KCR10005**	
1.4 16V - 1.6 Hdi	X		05-set	3350.32	**KCR10004**	
1.6	X		03-ott	3350.72	**KCR10001**	SI ABS
1.6		X	03-ott	3730.21	**KCR10005**	
1.6	X		03-ott	3350.32	**KCR10004**	
1.6 VTS	X		04-set	3350.72	**KCR10001**	SI ABS
1.6 VTS		X	04-set	3730.21	**KCR10005**	
1.6 VTS	X		04-set	3350.32	**KCR10004**	

follow CITROEN

MODELLO MODEL	ASS.ANT. FRONT AXLE	ASS.POS. REAR AXLE	ANNO YEAR	RIF ORIGINALE ORIGINAL REF	RIF CORAM CORAM REF	NOTE NOTES
C2 ENTERPRISE						
1.1	X		03-set	3350.72	**KCR10001**	SI ABS
1.1		X	03-set	3730.21	**KCR10005**	
1.1	X		03-set	3350.32	**KCR10004**	
1.4 Hdi	X		03-mag	3350.72	**KCR10001**	SI ABS
1.4 Hdi		X	03-mag	3730.21	**KCR10005**	
1.4 Hdi	X		03-mag	3350.32	**KCR10004**	
C25 Autobus						
1.8 E - 1.9 D - 2.5 D 4x4 - 2.5 D Turbo - 2.5 D Turbo 4x4	X		87-94	3326.27	**KCR12007**	
1.9 TD	X		92-94	3326.27	**KCR12007**	
2.0	X		91-94	3326.27	**KCR12007**	
2.0 E	X		81-94	3326.27	**KCR12007**	
2.5 D	X		85-94	3326.27	**KCR12007**	
C25 Furgonato						
2.0	X		91-94	3326.27	**KCR12007**	
2.0 E	X		81-94	3326.27	**KCR12007**	
C25 Pianale piatto						
2.0	X		87-94	3326.27	**KCR12007**	
C3 AIRCROSS II						
1.2 PureTech 110 - 1.2 PureTech 130	X		17->	1606623580	**KCR10002**	SI ABS
1.2 PureTech 82 - 1.6 BlueHDi 100 - 1.6 BlueHDi 120	X		17->	1606623580	**KCR10002**	SI ABS
1.5 BlueHDi 100 - 1.5 BlueHDi 120	X		18->	1606623580	**KCR10002**	SI ABS

follow CITROEN

MODELLO MODEL	ASS.ANT. FRONT AXLE	ASS.POS. REAR AXLE	ANNO YEAR	RIF ORIGINALE ORIGINAL REF	RIF CORAM CORAM REF	NOTE NOTES
C3 I						
1.1 i - 1.4 16V Hdi - 1.4 Hdi - 1.4 i Bivalent	X		02->	3350.72	**KCR10001**	SI ABS
1.1 i - 1.4 16V Hdi - 1.4 Hdi - 1.4 i Bivalent		X	02->	3730.21	**KCR10005**	
1.1 i - 1.4 16V Hdi - 1.4 Hdi - 1.4 i Bivalent	X		02->	3350.32	**KCR10004**	
1.1 LPG	X		06-set	3350.72	**KCR10001**	SI ABS
1.1 LPG		X	06-set	3730.21	**KCR10005**	
1.1 LPG	X		06-set	3350.32	**KCR10004**	
1.4 16V	X		03->	3350.72	**KCR10001**	SI ABS
1.4 16V		X	03->	3730.21	**KCR10005**	
1.4 16V	X		03->	3350.32	**KCR10004**	
1.4 BiFuel	X		08-set	3350.72	**KCR10001**	SI ABS
1.4 BiFuel		X	08-set	3730.21	**KCR10005**	
1.4 BiFuel	X		08-set	3350.32	**KCR10004**	
1.4 i - 1.6 16V	X		02-ott	3350.72	**KCR10001**	SI ABS
1.4 i - 1.6 16V		X	02-ott	3730.21	**KCR10005**	
1.4 i - 1.6 16V	X		02-ott	3350.32	**KCR10004**	
1.6 16V Hdi	X		05->	3350.72	**KCR10001**	SI ABS
1.6 16V Hdi		X	05->	3730.21	**KCR10005**	
1.6 16V Hdi	X		05->	3350.32	**KCR10004**	

follow CITROEN

MODELLO MODEL	ASS.ANT. FRONT AXLE	ASS.POS. REAR AXLE	ANNO YEAR	RIF ORIGINALE ORIGINAL REF	RIF CORAM CORAM REF	NOTE NOTES
C3 II						
1.0 Vti 68 - 1.6 Hdi 115	X		12->	3350.72	**KCR10001**	SI ABS
1.0 Vti 68 - 1.6 Hdi 115	X		12->	1606623580	**KCR10002**	SI ABS
1.0 Vti 68 - 1.6 Hdi 115		X	12->	3748.A1	**KCR10003**	
1.1 BiFuel - 1.4 LPG	X		10->	3350.72	**KCR10001**	SI ABS
1.1 BiFuel - 1.4 LPG	X		10->	1606623580	**KCR10002**	SI ABS
1.1 BiFuel - 1.4 LPG		X	10->	3748.A1	**KCR10003**	
1.1 i	X		set-13	3350.72	**KCR10001**	SI ABS
1.1 i	X		set-13	1606623580	**KCR10002**	SI ABS
1.1 i		X	set-13	3748.A1	**KCR10003**	
1.2 THP 110 - 1.6 BlueHDi 100	X		14->	3350.72	**KCR10001**	SI ABS
1.2 THP 110 - 1.6 BlueHDi 100	X		14->	1606623580	**KCR10002**	SI ABS
1.2 THP 110 - 1.6 BlueHDi 100		X	14->	3748.A1	**KCR10003**	
1.2 Vti 82	X		dic-16	3350.72	**KCR10001**	SI ABS
1.2 Vti 82	X		dic-16	1606623580	**KCR10002**	SI ABS
1.2 Vti 82		X	dic-16	3748.A1	**KCR10003**	
1.4 - 1.6 Hdi	X		set-16	3350.72	**KCR10001**	SI ABS
1.4 - 1.6 Hdi	X		set-16	1606623580	**KCR10002**	SI ABS
1.4 - 1.6 Hdi		X	set-16	3748.A1	**KCR10003**	
1.4 Hdi 70 - 1.4 Vti 95 - 1.6 HDi110 - 1.6 Vti 120	X		09->	3350.72	**KCR10001**	SI ABS
1.4 Hdi 70 - 1.4 Vti 95 - 1.6 HDi110 - 1.6 Vti 120	X		09->	1606623580	**KCR10002**	SI ABS
1.4 Hdi 70 - 1.4 Vti 95 - 1.6 HDi110 - 1.6 Vti 120		X	09->	3748.A1	**KCR10003**	
1.6 BlueHDi 75	X		15->	3350.72	**KCR10001**	SI ABS
1.6 BlueHDi 75	X		15->	1606623580	**KCR10002**	SI ABS
1.6 BlueHDi 75		X	15->	3748.A1	**KCR10003**	
C3 II Cassone						
1.4 Hdi	X		ott-16	3350.72	**KCR10001**	SI ABS
1.4 Hdi	X		ott-16	1606623580	**KCR10002**	SI ABS
1.4 Hdi		X	ott-16	3748.A1	**KCR10003**	
1.6 BlueHDi	X		15-16	3350.72	**KCR10001**	SI ABS
1.6 BlueHDi	X		15-16	1606623580	**KCR10002**	SI ABS
1.6 BlueHDi		X	15-16	3748.A1	**KCR10003**	

follow CITROEN

MODELLO MODEL	ASS.ANT. FRONT AXLE	ASS.POS. REAR AXLE	ANNO YEAR	RIF ORIGINALE ORIGINAL REF	RIF CORAM CORAM REF	NOTE NOTES
C3 III						
1.2 PureTech 82 - 1.5 BlueHDi 100	X		18->	3350.72	**KCR10001**	SI ABS
1.2 PureTech 82 - 1.5 BlueHDi 100	X		18->	1606623580	**KCR10002**	SI ABS
1.2 PureTech 82 - 1.5 BlueHDi 100		X	18->	3748.A1	**KCR10003**	
1.2 THP 110 - 1.2 Vti 68 - 1.2 Vti 82	X		16->	3350.72	**KCR10001**	SI ABS
1.2 THP 110 - 1.2 Vti 68 - 1.2 Vti 82	X		16->	1606623580	**KCR10002**	SI ABS
1.2 THP 110 - 1.2 Vti 68 - 1.2 Vti 82		X	16->	3748.A1	**KCR10003**	
1.6 BlueHDi 100 - 1.6 BlueHDi 75	X		16->	3350.72	**KCR10001**	SI ABS
1.6 BlueHDi 100 - 1.6 BlueHDi 75	X		16->	1606623580	**KCR10002**	SI ABS
1.6 BlueHDi 100 - 1.6 BlueHDi 75		X	16->	3748.A1	**KCR10003**	
1.6 Vti	X		17->	3350.72	**KCR10001**	SI ABS
1.6 Vti	X		17->	1606623580	**KCR10002**	SI ABS
1.6 Vti		X	17->	3748.A1	**KCR10003**	
C3 Picasso						
1.2 THP 100 - 1.6 BlueHDi 100	X		15->	1606623580	**KCR10002**	SI ABS
1.4 Vti 95 - 1.6 Hdi - 1.6 Vti - 1.6 Vti 120	X		09->	1606623580	**KCR10002**	SI ABS
1.4 Vti 95 LPG	X		12-<	1606623580	**KCR10002**	SI ABS
1.6 Hdi 115	X		13->	1606623580	**KCR10002**	SI ABS
1.6 Hdi 90 - 1.6 Hdi 110	X		10->	1606623580	**KCR10002**	SI ABS
C3 Pluriel						
1.4 - 1.6	X		03->	3350.72	**KCR10001**	SI ABS
1.4 - 1.6		X	03->	3730.21	**KCR10005**	
1.4 - 1.6	X		03->	3350.32	**KCR10004**	
1.4 Hdi	X		04->	3350.72	**KCR10001**	SI ABS
1.4 Hdi		X	04->	3730.21	**KCR10005**	
1.4 Hdi	X		04->	3350.32	**KCR10004**	
C4 CACTUS						
1.2 PureTech 130	X		17->	3350.72	**KCR10001**	SI ABS
1.2 PureTech 130	X		17->	1606623580	**KCR10002**	SI ABS
1.2 PureTech 130		X	17->	3748.A1	**KCR10003**	
1.2 THP 110 - 1.2 Vti 75/PureTech 75 - 1.2 Vti 82	X		14->	3350.72	**KCR10001**	SI ABS
1.2 THP 110 - 1.2 Vti 75/PureTech 75 - 1.2 Vti 82	X		14->	1606623580	**KCR10002**	SI ABS
1.2 THP 110 - 1.2 Vti 75/PureTech 75 - 1.2 Vti 82		X	14->	3748.A1	**KCR10003**	
1.5 BlueHDi 100 - 1.5 BlueHDi 120	X		18->	3350.72	**KCR10001**	SI ABS
1.5 BlueHDi 100 - 1.5 BlueHDi 120	X		18->	1606623580	**KCR10002**	SI ABS
1.5 BlueHDi 100 - 1.5 BlueHDi 120		X	18->	3748.A1	**KCR10003**	
1.6 BlueHDi 100 - 1.6 Hdi 90	X		14->	3350.72	**KCR10001**	SI ABS
1.6 BlueHDi 100 - 1.6 Hdi 90	X		14->	1606623580	**KCR10002**	SI ABS
1.6 BlueHDi 100 - 1.6 Hdi 90	X	X	14->	3748.A1	**KCR10003**	

follow CITROEN

MODELLO MODEL	ASS.ANT. FRONT AXLE	ASS.POS. REAR AXLE	ANNO YEAR	RIF ORIGINALE ORIGINAL REF	RIF CORAM CORAM REF	NOTE NOTES
C4 Coupé						
1.4 16V - 1.6 16V - 1.6 Hdi - 2.0 Hdi	X		04-nov	1606623580	**KCR10002**	SI ABS
1.4 16V - 1.6 16V - 1.6 Hdi - 2.0 Hdi		X	04-nov	3748.83	**KCR10006**	
1.6 THP 150 - 1.6 Vti 120	X		08-nov	1606623580	**KCR10002**	SI ABS
1.6 THP 150 - 1.6 Vti 120		X	08-nov	3748.83	**KCR10006**	
2.0 16V	X		04-ott	1606623580	**KCR10002**	SI ABS
2.0 16V		X	04-ott	3748.83	**KCR10006**	
C4 Grand Picasso I						
1.6 16V - 1.6 Vti 120	X		ago-13	1606623580	**KCR10002**	SI ABS
1.6 Hdi	X		06-nov	1606623580	**KCR10002**	SI ABS
1.6 Hdi 110 - 1.6 THP 155 - 2.0 Hdi 165	X		ott-13	1606623580	**KCR10002**	SI ABS
1.8 i 16C CNG	X		09-nov	1606623580	**KCR10002**	SI ABS
1.8 i 16V -	X		06-ott	1606623580	**KCR10002**	SI ABS
1.8 i 16V Flex - 2.0 Hdi 150	X		set-13	1606623580	**KCR10002**	SI ABS
2.0 Hdi 138 - 2.0 i 16V	X		giu-13	1606623580	**KCR10002**	SI ABS
C4 I						
1.4 16V - 1.6 16V - 1.6 Hdi - 2.0 Hdi - 2.0 16V	X		04-nov	1606623580	**KCR10002**	SI ABS
1.4 16V - 1.6 16V - 1.6 Hdi - 2.0 Hdi - 2.0 16V		X	04-nov	3748.83	**KCR10006**	
1.6 16V Bio-Flex	X		07-ago	1606623580	**KCR10002**	SI ABS
1.6 16V Bio-Flex		X	07-ago	3748.83	**KCR10006**	
1.6 THP 140 - 1.6 THP 150 - 1.6 Vti 120	X		08-nov	1606623580	**KCR10002**	SI ABS
1.6 THP 140 - 1.6 THP 150 - 1.6 Vti 120		X	08-nov	3748.83	**KCR10006**	
C4 I Cassone						
2.0 Hdi	X		05-ott	1606623580	**KCR10002**	SI ABS
C4 II						
1.2 THP 110 - 1.6 BlueHDi 120	X		15->	1606623580	**KCR10002**	SI ABS
1.2 THP 130 - 1.6 BlueHDi 100 - 1.6 BlueHDi 115			14->	1606623580	**KCR10002**	SI ABS
1.4 Vti 95 - 1.6 Hdi 110 - 1.6 Hdi 90	X		09->	1606623580	**KCR10002**	SI ABS
1.6 THP 155 - 1.6 Vti 120	X		set-16	1606623580	**KCR10002**	SI ABS
1.6 Vti 120 LPG	X		11->	1606623580	**KCR10002**	SI ABS
2.0 Hdi/BlueHDi 150	X		09->	1606623580	**KCR10002**	SI ABS
C4 II Cassone						
1.6 BlueHDi	X		14->	1606623580	**KCR10002**	SI ABS
1.6 Hdi	X		10->	1606623580	**KCR10002**	SI ABS
2.0 Hdi		X	05-ott	3748.83	**KCR10006**	

follow CITROEN

MODELLO MODEL	ASS.ANT. FRONT AXLE	ASS.POS. REAR AXLE	ANNO YEAR	RIF ORIGINALE ORIGINAL REF	RIF CORAM CORAM REF	NOTE NOTES
C4 Picasso						
1.6 16V - 1.6 THP 140 - 1.6 Vti 120	X		ago-13	1606623580	**KCR10002**	SI ABS
1.6 Hdi - 2.0 i 16V	X		lug-13	1606623580	**KCR10002**	SI ABS
1.6 Hdi 110 - 1.6 THP 155 - 2.0 Hdi 165	X		ott-13	1606623580	**KCR10002**	SI ABS
1.8 Bifuel	X		09-dic	1606623580	**KCR10002**	SI ABS
1.8 i 16V	X		07-nov	1606623580	**KCR10002**	SI ABS
2.0 Hdi 138	X		giu-13	1606623580	**KCR10002**	SI ABS
2.0 Hdi 150	X		set-13	1606623580	**KCR10002**	SI ABS
C5 Cassone						
1.6 Hdi	X		04-ago	1606623580	**KCR10002**	SI ABS
1.8	X		04-mag	1606623580	**KCR10002**	SI ABS
2.0	X		04-ago	1606623580	**KCR10002**	SI ABS
2.0 Hdi	X		02-ago	1606623580	**KCR10002**	SI ABS
2.2 Hdi	X		02-apr	1606623580	**KCR10002**	SI ABS
C5 I						
1.8 16V - 2.0 16V - 2.0 16V Hpi - 2.0 Hdi	X		01-apr	1606623580	**KCR10002**	SI ABS
2.2 Hdi - 3.0 V6	X		01-apr	1606623580	**KCR10002**	SI ABS
C5 I Break						
1.8 16V - 2.0 16V - 2.0 16V Hpi - 2.0 Hdi	X		01-apr	1606623580	**KCR10002**	SI ABS
2.2 Hdi - 3.0 V6	X		01-apr	1606623580	**KCR10002**	SI ABS
3.0 Carlsson	X		03-apr	1606623580	**KCR10002**	SI ABS
C5 II						
1.6 Hdi - 1.8 16V - 2.0 16V - 2.0 Hdi - 2.2 Hdi - 3.0 V6	X		04->	1606623580	**KCR10002**	SI ABS
C5 II Break						
1.6 Hdi - 1.8 16V - 2.0 16V - 2.0 Hdi - 2.2 Hdi - 3.0 V6	X		04->	1606623580	**KCR10002**	SI ABS

follow CITROEN

MODELLO MODEL	ASS.ANT. FRONT AXLE	ASS.POS. REAR AXLE	ANNO YEAR	RIF ORIGINALE ORIGINAL REF	RIF CORAM CORAM REF	NOTE NOTES
C-ELYSEE						
1.2 PureTech 82	X		18->	3350.72	**KCR10001**	SI ABS
1.2 PureTech 82	X		18->	1606623580	**KCR10002**	SI ABS
1.2 PureTech 82		X	18->	3748.A1	**KCR10003**	
1.2 Vti 72 - 1.6 HDI 92 - 1.6 Vti 115	X		12->	3350.72	**KCR10001**	SI ABS
1.2 Vti 72 - 1.6 HDI 92 - 1.6 Vti 115	X		12->	1606623580	**KCR10002**	SI ABS
1.2 Vti 72 - 1.6 HDI 92 - 1.6 Vti 115		X	12->	3748.A1	**KCR10003**	
1.2 Vti 82	X		14->	3350.72	**KCR10001**	SI ABS
1.2 Vti 82	X		14->	1606623580	**KCR10002**	SI ABS
1.2 Vti 82		X	14->	3748.A1	**KCR10003**	
E-MEHARI						
Electric		X	16->	1606635380	**KMR12001**	SI ABS

follow CITROEN

MODELLO MODEL	ASS.ANT. FRONT AXLE	ASS.POS. REAR AXLE	ANNO YEAR	RIF ORIGINALE ORIGINAL REF	RIF CORAM CORAM REF	NOTE NOTES
JUMPER Autobus						
1.9 D - 1.9 TD - 2.0 - 2.5 D - 2.5 TD	X		94-02	1606375080	**KCR10102**	
1.9 D - 2.8 D	X		99-02	1300535080	**KCR10104**	
1.9 D - 2.8 D		X	99-02	3350.25	**KCR10105**	
1.9 D - 2.8 D	X		99-02	3326.27	**KCR12007**	
1.9 D - 2.8 D		X	99-02	3730.32	**KCR12011**	
1.9 D - 2.8 D	X		99-02	3326.63	**KCR10106**	
1.9 TD - 2.0 - 2.5 D - 2.5 TD	X		94-02	1300535080	**KCR10104**	
1.9 TD - 2.0 - 2.5 D - 2.5 TD		X	94-02	3350.25	**KCR10105**	
1.9 TD - 2.0 - 2.5 D - 2.5 TD	X		94-02	3326.27	**KCR12007**	
1.9 TD - 2.0 - 2.5 D - 2.5 TD		X	94-02	3730.32	**KCR12011**	
1.9 TD - 2.0 - 2.5 D - 2.5 TD	X		94-02	3326.63	**KCR10106**	
1.9 TD 4x4 - 2.0 4x4 - 2.5 D 4x4 - 2.5 TD 4x4	X		96-02	1606375080	**KCR10102**	
1.9 TD 4x4 - 2.0 4x4 - 2.5 D 4x4 - 2.5 TD 4x4	X		96-02	1300535080	**KCR10104**	
1.9 TD 4x4 - 2.0 4x4 - 2.5 D 4x4 - 2.5 TD 4x4	X		96-02	3326.27	**KCR12007**	
1.9 TD 4x4 - 2.0 4x4 - 2.5 D 4x4 - 2.5 TD 4x4	X		96-02	3326.63	**KCR10106**	
2.0 - 2.0 Hdi - 2.2 Hdi - 2.8 Hdi - 2.8 Hdi Trazione integrale		X	02->	1606374780	**KMR12007**	SI ABS
2.0 Bivalent	X		03->	1606375080	**KCR10102**	
2.0 Bivalent		X	03->	1606374780	**KMR12007**	SI ABS
2.0 BlueHDi 110 - 2.0 BlueHDi 130 - 2.0 BlueHDi 160	X		15-19	1606374680	**KCR12002**	SI ABS
2.0 BlueHDi 110 - 2.0 BlueHDi 130 - 2.0 BlueHDi 160		X	15-19	1606374780	**KMR12007**	SI ABS
2.0 Hdi - 2.2 Hdi - 2.8 Hdi - 2.8 Hdi Trazione integrale	X		02->	1606375080	**KCR10102**	
2.2 BlueHDi 100 - 2.2 Hdi 120		X	06->	1606374780	**KMR12007**	SI ABS
2.2 BlueHDi 100 - 2.2 Hdi 120		X	06->	1606374780	**KMR12007**	SI ABS
2.2 BlueHDi 100 - 2.2 Hdi 120 - 3.0 Hdi 160	X		06->	1606374680	**KCR12002**	SI ABS
2.2 BlueHDi 120 - 2.2 BlueHDi 140 - 2.2 BueHDi 165		X	19->	1606374780	**KMR12007**	SI ABS
2.2 BlueHDi 140	X		19->	1606374680	**KCR12002**	SI ABS
2.2 Hdi 110 - 2.2 Hdi 150 - 3.0 Hdi 180		X	11->	1606374780	**KMR12007**	SI ABS
2.2 Hdi 110- 2.2 Hdi 130 - 2.2 Hdi 150 - 3.0 Hdi 180	X		11->	1606374680	**KCR12002**	SI ABS
2.5 TDi		X	96-00	3350.25	**KCR10105**	
2.5 TDi		X	96-00	3730.32	**KCR12011**	
2.5 TDI 4x4 - 2.5 TDi	X		96-00	1606375080	**KCR10102**	
2.5 TDI 4x4 - 2.5 TDi	X		96-00	1300535080	**KCR10104**	
2.5 TDI 4x4 - 2.5 TDi	X		96-00	3326.27	**KCR12007**	
2.5 TDI 4x4 - 2.5 TDi	X		96-01	3326.63	**KCR10106**	
2.8 D	X		99-02	1606375080	**KCR10102**	
2.8 HDi		X	00-02	3350.25	**KCR10105**	
2.8 HDi		X	00-02	3730.32	**KCR12011**	
2.8 HDi - 2.8 HDi 4x4	X		00-02	1606375080	**KCR10102**	
2.8 HDi - 2.8 HDi 4x4	X		00-02	1300535080	**KCR10104**	
2.8 HDi - 2.8 HDi 4x4	X		00-02	3326.27	**KCR12007**	
2.8 HDi - 2.8 HDi 4x4	X		00-02	3326.63	**KCR10106**	
3.0 Hdi 155	X		10->	1606374680	**KCR12002**	SI ABS

follow CITROEN

MODELLO MODEL	ASS.ANT. FRONT AXLE	ASS.POS. REAR AXLE	ANNO YEAR	RIF ORIGINALE ORIGINAL REF	RIF CORAM CORAM REF	NOTE NOTES
JUMPER Furgonato						
1.9 D - 1.9 TD - 2.0 - 2.5 D - 2.5 TD	X		94-02	1606375080	**KCR10102**	
1.9 D - 1.9 TD - 2.0 - 2.5 D - 2.5 TD	X		94-02	1300535080	**KCR10104**	
1.9 D - 1.9 TD - 2.0 - 2.5 D - 2.5 TD		X	94-02	3350.25	**KCR10105**	
1.9 D - 1.9 TD - 2.0 - 2.5 D - 2.5 TD	X		94-02	3326.27	**KCR12007**	
1.9 D - 1.9 TD - 2.0 - 2.5 D - 2.5 TD		X	94-02	3730.32	**KCR12011**	
1.9 D - 1.9 TD - 2.0 - 2.5 D - 2.5 TD	X		94-02	3326.63	**KCR10106**	
2.0 - 2.0 Hdi - 2.2 Hdi	X		96-02	1606375080	**KCR10102**	
2.0 - 2.0 Hdi - 2.2 Hdi - 2.8 Hdi - 2.8 Hdi 4x4		X	02->	1606374780	**KMR12007**	SI ABS
2.0 bivalent	X		03->	1606375080	**KCR10102**	
2.0 bivalent		X	03->	1606374780	**KMR12007**	SI ABS
2.0 BlueHDi 110 - 2.0 BlueHDi 130	X		15-19	1606374680	**KCR12002**	SI ABS
2.0 BlueHDi 110 - 2.0 BlueHDi 130			16-19	1606374780	**KMR12007**	SI ABS
2.0 BlueHDi 130 4x4 - 2.0 BlueHDi 160	X		15-19	1606374680	**KCR12002**	SI ABS
2.0 BlueHDi 130 4x4 - 2.0 BlueHDi 160 - 2.0 BlueHDi 160 4x4			16-19	1606374780	**KMR12007**	SI ABS
2.0 HDI	X		01-feb	1606375080	**KCR10102**	
2.0 HDI	X		01-feb	1300535080	**KCR10104**	
2.0 HDI		X	01-feb	3350.25	**KCR10105**	
2.0 HDI	X		01-feb	3326.27	**KCR12007**	
2.0 HDI		X	01-feb	3730.32	**KCR12011**	
2.0 HDI	X		01-feb	3326.63	**KCR10106**	
2.2 BlueHDi 120 - 2.2 BlueHDi 140 - 2.2 BlueHDi 165		X	19->	1606374780	**KMR12007**	SI ABS
2.2 BlueHDi 140	X		19->	1606374680	**KCR12002**	SI ABS
2.2 HDi 100	X		06-dic	1606374680	**KCR12002**	SI ABS
2.2 HDi 100		X	06-dic	1606374780	**KMR12007**	SI ABS
2.2 Hdi 110- 2.2 Hdi 130 - 2.2 Hdi 150 - 3.0 Hdi 180	X		11->	1606374680	**KCR12002**	SI ABS
2.2 Hdi 110- 2.2 Hdi 130 - 3.0 Hdi 180		X	11->	1606374780	**KMR12007**	SI ABS
2.2 Hdi 120 - 3.0 Hdi 160	X		06->	1606374680	**KCR12002**	SI ABS
2.2 Hdi 120 - 3.0 Hdi 160		X	06->	1606374780	**KMR12007**	SI ABS
2.2 Hdi 130 4x4	X		dic-16	1606374680	**KCR12002**	SI ABS
2.2 Hdi 130 4x4		X	dic-16	1606374780	**KMR12007**	SI ABS
2.5 D 4x4	X		00-02	1606375080	**KCR10102**	
2.5 D 4x4	X		00-02	1300535080	**KCR10104**	
2.5 D 4x4	X		00-02	3326.27	**KCR12007**	
2.5 D 4x4	X		00-02	3326.63	**KCR10106**	
2.5 TDi	X		96-00	1606375080	**KCR10102**	
2.5 TDi	X		96-00	1606375080	**KCR10102**	
2.5 TDi	X		96-00	1300535080	**KCR10104**	
2.5 TDi		X	96-00	3350.25	**KCR10105**	
2.5 TDi	X		96-00	3326.27	**KCR12007**	
2.5 TDi		X	96-00	3730.32	**KCR12011**	
2.5 TDi	X		96-00	3326.63	**KCR10106**	
2.5 TDi 4x4	X		0	1300535080	**KCR10104**	
2.5 TDi 4x4	X		0	3326.27	**KCR12007**	
2.5 TDi 4x4	X		0	3326.63	**KCR10106**	
2.8 HDi		X	00-02	3350.25	**KCR10105**	

follow CITROEN

MODELLO MODEL	ASS.ANT. FRONT AXLE	ASS.POS. REAR AXLE	ANNO YEAR	RIF ORIGINALE ORIGINAL REF	RIF CORAM CORAM REF	NOTE NOTES
JUMPER Pianale piatto						
1.9 TD - 2.0 - 2.5 D - 2.5 TD	X		94-02	1606375080	**KCR10102**	
1.9 TD - 2.0 - 2.5 D - 2.5 TD	X		94-02	1300535080	**KCR10104**	
1.9 TD - 2.0 - 2.5 D - 2.5 TD		X	94-02	3350.25	**KCR10105**	
1.9 TD - 2.0 - 2.5 D - 2.5 TD	X		94-02	3326.27	**KCR12007**	
1.9 TD - 2.0 - 2.5 D - 2.5 TD		X	94-02	3730.32	**KCR12011**	
1.9 TD - 2.0 - 2.5 D - 2.5 TD	X		94-02	3326.63	**KCR10106**	
2.0 BlueHDi 110 - 2.0 BlueHDi 130 - 2.0 BlueHDi 130 4x4		X	16-19	1606374780	**KMR12007**	SI ABS
2.0 BlueHDi 110 - 2.0 BlueHDi 130 - 2.0 BlueHDi 160	X		15-19	1606374680	**KCR12002**	SI ABS
2.0 BlueHDi 160 - 2.0 BlueHDi 160 4x4		X	16-19	1606374780	**KMR12007**	SI ABS
2.0 HDi	X		02->	1606375080	**KCR10102**	
2.0 HDi - 2.8 HDi		X	02->	3730.32	**KCR12011**	
2.0 HDi - 2.8 HDi	X		02->	3326.63	**KCR10106**	
2.2 BlueHDi 120 - 2.2 BlueHDi 140 - 2.2 BlueHDi 165		X	19->	1606374780	**KMR12007**	SI ABS
2.2 Hdi	X		02-giu	1606375080	**KCR10102**	
2.2 HDi - 2.8 HDi 4x4		X	02-giu	3730.32	**KCR12011**	
2.2 HDi - 2.8 HDi 4x4	X		02-giu	3326.63	**KCR10106**	
2.2 HDi 100 - 2.2 Hdi 120 - 3.0 Hdi 160	X		06->	1606374680	**KCR12002**	SI ABS
2.2 HDi 100 - 2.2 Hdi 120 - 3.0 Hdi 160		X	06->	1606374780	**KMR12007**	SI ABS
2.2 Hdi 110- 2.2 Hdi 130 - 2.2 Hdi 150 - 3.0 Hdi 180	X		11->	1606374680	**KCR12002**	SI ABS
2.2 Hdi 110- 2.2 Hdi 130 - 2.2 Hdi 150 - 3.0 Hdi 180		X	11->	1606374780	**KMR12007**	SI ABS
2.5 D 4x4 - 2.5 TDi 4x4	X		00-02	1606375080	**KCR10102**	
2.5 D 4x4 - 2.5 TDi 4x4	X		00-02	1300535080	**KCR10104**	
2.5 D 4x4 - 2.5 TDi 4x4	X		00-02	3326.27	**KCR12007**	
2.5 D 4x4 - 2.5 TDi 4x4	X		00-02	3326.63	**KCR10106**	
2.5 TDi	X		96-02	1606375080	**KCR10102**	
2.5 TDi	X		96-02	1300535080	**KCR10104**	
2.5 TDi		X	96-02	3350.25	**KCR10105**	
2.5 TDi	X		96-02	3326.27	**KCR12007**	
2.5 TDi		X	96-02	3730.32	**KCR12011**	
2.5 TDi	X		96-02	3326.63	**KCR10106**	
2.8 D	X		99-02	1606375080	**KCR10102**	
2.8 D	X		99-02	1300535080	**KCR10104**	
2.8 D		X	99-02	3350.25	**KCR10105**	
2.8 D	X		99-02	3326.27	**KCR12007**	
2.8 D		X	99-02	3730.32	**KCR12011**	
2.8 D	X		99-02	3326.63	**KCR10106**	
2.8 HDi	X		00->	1606375080	**KCR10102**	
2.8 HDi	X		00-02	1300535080	**KCR10104**	
2.8 HDi		X	00-02	3350.25	**KCR10105**	
2.8 HDi	X		00-02	3326.27	**KCR12007**	
2.8 HDi		X	00-02	3730.32	**KCR12011**	
2.8 HDi	X		00-02	3326.63	**KCR10106**	
2.8 Hdi 4x4	X		02-giu	1606375080	**KCR10102**	
3.0 Hdi 145	X		10->	1606374680	**KCR12002**	SI ABS

follow CITROEN

MODELLO MODEL	ASS.ANT. FRONT AXLE	ASS.POS. REAR AXLE	ANNO YEAR	RIF ORIGINALE ORIGINAL REF	RIF CORAM CORAM REF	NOTE NOTES
NEMO Furgonato						
1.3 Hdi 75		X	10->	1606635380	**KMR12001**	SI ABS
1.4	X		08->	3326.72	**KCR12003**	SI ABS
1.4 - 1.4 Hdi		X	08->	1606635380	**KMR12001**	SI ABS
NEMO Station wagon						
1.3 Hdi 75		X	10->	1606635380	**KMR12001**	SI ABS
1.4 - 1.4 Hdi		X	09->	1606635380	**KMR12001**	SI ABS
SAXO						
1.0 X	X		98-03	3350.32	**KCR10004**	
1.0 X - 1.1 X, SX - 1.4 VTS - 1.5 D - 1.6 VTL, VTR - 1.6 VTS		X	96-03	3748.17	**KCR10103**	
1.0 X - 1.6 VTL,VTR - 1.6 VTS		X	98-03	3730.21	**KCR10101**	
1.1 X,SX - 1.4 VTS		X	96-03	3730.21	**KCR10101**	
1.1 X,SX - 1.4 VTS - 1.6 VTL,VTR - 1.6 VTS	X		96-03	3350.32	**KCR10004**	
1.5 D - 1.6		X	96-04	3730.21	**KCR10101**	
1.5 D - 1.6	X		96-04	3350.32	**KCR10004**	
1.6		X	96-04	3748.17	**KCR10103**	
SAXO Hatchback van						
1.0		X	97-03	3730.21	**KCR10101**	
1.0	X		97-03	3350.32	**KCR10004**	
1.5 D		X	99-03	3730.21	**KCR10101**	
1.5 D	X		99-03	3350.32	**KCR10004**	
VISA						
16 GTI		X	85-91	3748.17	**KCR10103**	
17 D		X	84-91	3748.17	**KCR10103**	

follow CITROEN

MODELLO MODEL	ASS.ANT. FRONT AXLE	ASS.POS. REAR AXLE	ANNO YEAR	RIF ORIGINALE ORIGINAL REF	RIF CORAM CORAM REF	NOTE NOTES
XSARA						
1.4 Hdi		X	03-mag	3730.21	**KCR10101**	
1.4 i		X	97-05	3730.21	**KCR10101**	
1.4 i	X		97-05	3350.32	**KCR10004**	
1.4 i - 1.9 D		X	97-05	3748.17	**KCR10103**	
1.5 D - 1.6 i - 1.8 D - 1.8 i - 1.8 i 16V - 1.8 i Aut. - 1.9 D - 1.9 TD		X	97-00	3730.21	**KCR10101**	
1.5 D - 1.6 i - 1.8 D - 1.8 i - 1.8 i 16V - 1.8 i Aut. - 1.9 TD		X	97-00	3748.17	**KCR10103**	
1.5 D - 1.6 i - 1.8 D - 1.8 i - 1.8 i 16V - 1.8 i Aut. - 1.9 TD	X		97-00	3350.32	**KCR10004**	
1.6 16V		X	00-05	3730.21	**KCR10101**	
1.9 D	X		98-05	3350.32	**KCR10004**	
1.9 SD		X	98-00	3730.21	**KCR10101**	
1.9 SD - 2.0 16V		X	98-00	3748.17	**KCR10103**	
1.9 SD - 2.0 16V	X		98-00	3350.32	**KCR10004**	
2.0 16V		X	98-05	3730.21	**KCR10101**	
2.0 Hdi 109		X	01-mag	3730.21	**KCR10101**	
2.0 Hdi 90		X	99-05	3730.21	**KCR10101**	
XSARA Break						
1.4 Hdi		X	03-mag	3730.21	**KCR10101**	
1.4 i		X	97-05	3748.17	**KCR10103**	
1.4 i	X		97-05	3350.32	**KCR10004**	
1.4 i - 1.9 D		X	97-05	3730.21	**KCR10101**	
1.4 LPG - 2.0 16V		X	98-05	3730.21	**KCR10101**	
1.4 LPG - 2.0 16V		X	98-05	3748.17	**KCR10103**	
1.4 LPG - 2.0 16V	X		98-00	3350.32	**KCR10004**	
1.5 D - 1.6 i - 1.8 D - 1.8 i - 1.8 i 16V - 1.8 i Aut. - 1.9 D - 1.9 TD		X	97-00	3730.21	**KCR10101**	
1.5 D - 1.6 i - 1.8 D - 1.8 i - 1.8 i 16V - 1.8 i Aut. - 1.9 TD		X	97-00	3748.17	**KCR10103**	
1.5 D - 1.6 i - 1.8 D - 1.8 i - 1.8 i 16V - 1.8 i Aut. - 1.9 TD	X		97-00	3350.32	**KCR10004**	
1.6 16V	X		00-05	3350.32	**KCR10004**	
1.9 D	X		97-05	3350.32	**KCR10004**	
2.0 Hdi 109		X	01-mag	3730.21	**KCR10101**	
2.0 Hdi 90		X	99-05	3730.21	**KCR10101**	
XSARA Cassone/ Furgonato						
1.9 D		X	99-05	3730.21	**KCR10101**	

follow CITROEN

MODELLO MODEL	ASS.ANT. FRONT AXLE	ASS.POS. REAR AXLE	ANNO YEAR	RIF ORIGINALE ORIGINAL REF	RIF CORAM CORAM REF	NOTE NOTES
XSARA Cassone/coda spiovente						
1.4	X		98-04	3350.32	**KCR10004**	
1.4 - 1.9 D		X	98-05	3730.21	**KCR10101**	
1.4 LPG		X	99-00	3730.21	**KCR10101**	
1.9 D		X	98-00	3748.17	**KCR10103**	
1.9 D	X		98-00	3350.32	**KCR10004**	
2.0 Hdi		X	00-05	3730.21	**KCR10101**	
XSARA Coupé						
1.4 Hdi		X	03-mag	3730.21	**KCR10101**	
1.4 i - 1.6 i - 1.8 i - 1.8 i 16V - 1.9 D - 1.9 TD - 2.0 i 16V		X	98-05	3730.21	**KCR10101**	
1.4 i - 2.0 i 16V	X		98-05	3350.32	**KCR10004**	
1.4 i - 2.0 i 16V		X	98-05	3748.17	**KCR10103**	
1.6 16V - 2.0 16V		X	00-05	3730.21	**KCR10101**	
1.6 i - 1.8 i - 1.8 i 16V - 1.9 D - 1.9 TD		X	98-00	3748.17	**KCR10103**	
1.6 i - 1.8 i - 1.8 i 16V - 1.9 TD	X		98-00	3350.32	**KCR10004**	
1.9 D	X		99-05	3350.32	**KCR10004**	
2.0 Hdi 109		X	01-mag	3730.21	**KCR10101**	
2.0 Hdi 90		X	99-05	3730.21	**KCR10101**	
ZX						
1.1 - 1.4 - 1.4 i - 1.6 i - 1.8 - 1.9 - 1.9 D - 1.9 i		X	91-97	3748.17	**KCR10103**	
1.6 - 2.0		X	94-97	3748.17	**KCR10103**	
1.8 D		X	93-97	3748.17	**KCR10103**	
1.8 i - 1.9 DT - 1.9 TD - 2.0 i - 2.0 i 16V		X	92-97	3748.17	**KCR10103**	
1.8 i 16V		X	96-97	3748.17	**KCR10103**	

DACIA

MODELLO MODEL	ASS.ANT. FRONT AXLE	ASS.POS. REAR AXLE	ANNO YEAR	RIF ORIGINALE ORIGINAL REF	RIF CORAM CORAM REF	NOTE NOTES
DOKKER Express Furgonato						
1.2 Tce 115	X		12->	402108022R	**KCR21102**	SI ABS
DUSTER						
1.2 TCe 125	X		13-18	402108022R	**KCR21102**	SI ABS
1.2 TCe 125 4x4 - 1.6 SCe 115	X		15-18	402108022R	**KCR21102**	SI ABS
1.5 dCi - 1.5 dCi 4x4 - 1.6 16V - 1.6 16V 4x4 - 1.6 16V Hi-Flex	X		ott-18	402108022R	**KCR21102**	SI ABS
1.5 dCi - 1.5 dCi 4x4 - 1.6 16V 4x4 - 1.6 16V Hi-Flex	X		11->	402108022R	**KCR21102**	SI ABS
1.6 16V LPG	X		nov-18	402108022R	**KCR21102**	SI ABS
1.6 SCe 115 - 1.6 SCe 115 4x4	X		15->	402108022R	**KCR21102**	SI ABS
1.6 SCe 115 4x4 - 1.6 SCe 115 LPG	X		15-18	402108022R	**KCR21102**	SI ABS

follow DACIA

MODELLO MODEL	ASS.ANT. FRONT AXLE	ASS.POS. REAR AXLE	ANNO YEAR	RIF ORIGINALE ORIGINAL REF	RIF CORAM CORAM REF	NOTE NOTES
DUSTER Furgonato						
1.2 TCe 125 4x4 -	X		13->	402108022R	**KCR21102**	SI ABS
LODGY						
1.3 Tce 100	X		19->	402108022R	**KCR21102**	SI ABS
LOGAN						
1.2 16V - 1.2 16V LPG - 1.4 MPI LPG - 1.6 16V		X	06->	6001548986	**KCR21001**	
1.2 16V - 1.2 16V LPG - 1.4 MPI LPG - 1.6 16V	X		06->	6001550915	**KCR21101**	SI ABS
1.2 16V - 1.2 16V LPG - 1.4 MPI LPG - 1.6 16V	X		06->	6001547696	**KCR21004**	
1.4 - 1.6		X	04->	6001548986	**KCR21001**	
1.4 - 1.6	X		04->	6001550915	**KCR21101**	SI ABS
1.4 - 1.6	X		04->	6001547696	**KCR21004**	
1.5 dCi		X	05->	6001548986	**KCR21001**	
1.5 dCi	X		05->	6001550915	**KCR21101**	SI ABS
1.5 dCi	X		05->	6001547696	**KCR21004**	
1.6 16V FlexFuel - 1.6 Bifuel - 1.6 MPI 85		X	10->	6001548986	**KCR21001**	
1.6 16V FlexFuel - 1.6 Bifuel - 1.6 MPI 85	X		10->	6001550915	**KCR21101**	SI ABS
1.6 16V FlexFuel - 1.6 Bifuel - 1.6 MPI 85	X		10->	6001547696	**KCR21004**	
LOGAN EXPRESS						
1.4 - 1.5 dCi - 1.6		X	09->	6001548986	**KCR21001**	
1.4 - 1.5 dCi - 1.6	X		09->	6001550915	**KCR21101**	SI ABS
1.4 - 1.5 dCi - 1.6	X		09->	6001547696	**KCR21004**	
1.6 MPI 85		X	10->	6001548986	**KCR21001**	
1.6 MPI 85	X		10->	6001550915	**KCR21101**	SI ABS
1.6 MPI 85	X		10->	6001547696	**KCR21004**	
LOGAN II						
1.0 Sce 75	X		17->	6001550915	**KCR21101**	SI ABS
1.0 Sce 75	X		17->	6001547696	**KCR21004**	
1.2 - 1.2 LPG - 1.5 dCi - 1.5 dCi / Blue dCi 75 - Tce 90	X		12->	6001550915	**KCR21101**	SI ABS
1.2 - 1.2 LPG - 1.5 dCi - 1.5 dCi / Blue dCi 75 - Tce 90	X		12->	6001547696	**KCR21004**	
1.6 16V	X		13->	6001550915	**KCR21101**	SI ABS
1.6 16V	X		13->	6001547696	**KCR21004**	

follow DACIA

MODELLO MODEL	ASS.ANT. FRONT AXLE	ASS.POS. REAR AXLE	ANNO YEAR	RIF ORIGINALE ORIGINAL REF	RIF CORAM CORAM REF	NOTE NOTES
LOGAN MCV						
1.4 - 1.5 dCi - 1.6 - 1.6 16V		X	07->	6001548986	**KCR21001**	
1.4 - 1.5 dCi - 1.6 - 1.6 16V	X		07->	6001550915	**KCR21101**	SI ABS
1.4 - 1.5 dCi - 1.6 - 1.6 16V	X		07->	6001547696	**KCR21004**	
1.6 16V Hi-Flex		X	09->	6001548986	**KCR21001**	
1.6 16V Hi-Flex	X		09->	6001550915	**KCR21101**	SI ABS
1.6 16V Hi-Flex	X		09->	6001547696	**KCR21004**	
1.6 Bifuel		X	08->	6001548986	**KCR21001**	
1.6 Bifuel	X		08->	6001550915	**KCR21101**	SI ABS
1.6 Bifuel	X		08->	6001547696	**KCR21004**	
1.6 MPI 85		X	10->	6001548986	**KCR21001**	
1.6 MPI 85	X		10->	6001550915	**KCR21101**	SI ABS
1.6 MPI 85	X		10->	6001547696	**KCR21004**	
LOGAN MCV II						
1.2 - 1.2 LPG - 1.5 dCi - Tce 90	X		13->	6001550915	**KCR21101**	SI ABS
1.2 - 1.2 LPG - 1.5 dCi - Tce 90	X		13->	6001547696	**KCR21004**	
Tce 90LPG	X		15->	6001550915	**KCR21101**	SI ABS
Tce 90LPG	X		15->	6001547696	**KCR21004**	
LOGAN Pick-Up						
1.4		X	09->	6001548986	**KCR21001**	
1.4	X		09->	6001550915	**KCR21101**	SI ABS
1.4	X		09->	6001547696	**KCR21004**	
1.5 dCi - 1.6		X	08->	6001548986	**KCR21001**	
1.5 dCi - 1.6	X		08->	6001550915	**KCR21101**	SI ABS
1.5 dCi - 1.6	X		08->	6001547696	**KCR21004**	
1.6 Bifuel - 1.6 MPI 85		X	10->	6001548986	**KCR21001**	
1.6 Bifuel - 1.6 MPI 85	X		10->	6001550915	**KCR21101**	SI ABS
1.6 Bifuel - 1.6 MPI 85	X		10->	6001547696	**KCR21004**	

follow DACIA

MODELLO MODEL	ASS.ANT. FRONT AXLE	ASS.POS. REAR AXLE	ANNO YEAR	RIF ORIGINALE ORIGINAL REF	RIF CORAM CORAM REF	NOTE NOTES
SANDERO						
1.2 16V - 1.2 16V LPG - 1.4 - 1.5 dCi - 1.6		X	08->	6001548986	**KCR21001**	
1.2 16V - 1.2 16V LPG - 1.4 - 1.5 dCi - 1.6	X		08->	6001550915	**KCR21101**	SI ABS
1.2 16V - 1.2 16V LPG - 1.4 - 1.5 dCi - 1.6	X		08->	6001547696	**KCR21004**	
1.4 MPI LPG		X	09->	6001548986	**KCR21001**	
1.4 MPI LPG	X		09->	6001550915	**KCR21101**	SI ABS
1.4 MPI LPG	X		09->	6001547696	**KCR21004**	
1.6 16V		X	11->	6001548986	**KCR21001**	
1.6 16V	X		11->	6001550915	**KCR21101**	SI ABS
1.6 16V	X		11->	6001547696	**KCR21004**	
1.6 LPG		X	10-dic	6001548986	**KCR21001**	
1.6 LPG	X		10-dic	6001550915	**KCR21101**	SI ABS
1.6 LPG	X		10-dic	6001547696	**KCR21004**	
1.6 MPI 85		X	10->	6001548986	**KCR21001**	
1.6 MPI 85	X		10->	6001550915	**KCR21101**	SI ABS
1.6 MPI 85	X		10->	6001547696	**KCR21004**	
SANDERO II						
1.0 SCe 75	X		16->	6001547696	**KCR21004**	
1.2 - 1.2 LPG - 1.5 dCi - 1.5 dCi 75 / Blue dCi 75 - Tce 90	X		12->	6001550915	**KCR21101**	SI ABS
1.2 - 1.2 LPG - 1.5 dCi - 1.5 dCi 75 / Blue dCi 75 - Tce 90	X		12->	6001547696	**KCR21004**	
Tce 90 LPG	X		15->	6001550915	**KCR21101**	SI ABS
Tce 90 LPG	X		15->	6001547696	**KCR21004**	
SOLENZA						
1.4 - 1.9 D	X		03->	6001543344	**KCR21002**	
1.4 - 1.9 D		X	03->	6001539074	**KCR10103**	

DAEWOO

MODELLO MODEL	ASS.ANT. FRONT AXLE	ASS.POS. REAR AXLE	ANNO YEAR	RIF ORIGINALE ORIGINAL REF	RIF CORAM CORAM REF	NOTE NOTES
ESPERO						
1.5 16V		X	93-99	2667886	**KCR21007**	
1.8		X	95-99	2667886	**KCR21007**	
2.0		X	91-99	2667886	**KCR21007**	
KALOS						
1.2 - 1.4 16V	X		03->	94535249	**KCR11103**	
1.4	X		02->	94535249	**KCR11103**	

follow DAEWOO						
MODELLO MODEL	ASS.ANT. FRONT AXLE	ASS.POS. REAR AXLE	ANNO YEAR	RIF ORIGINALE ORIGINAL REF	RIF CORAM CORAM REF	NOTE NOTES
KALOS Tre volumi						
1.4	X		02-apr	94535249	**KCR11103**	
LANOS						
1.3	X		97->	94535249	**KCR11103**	
1.3 - 1.6 16V		X	97->	2667886	**KCR21007**	
1.5	X		97-99	94535249	**KCR11103**	
1.5		X	97-99	2667886	**KCR21007**	
LANOS Tre volumi						
1.3 - 1.5	X		97->	94535249	**KCR11103**	
1.3 - 1.5 -1.6 16V		X	97->	2667886	**KCR21007**	
MATIZ						
0.8	X		98->	96285525	**KCR11101**	
0.8		X	98->	96316634	**KCR11102**	
1.0	X		03->	96285525	**KCR11101**	
1.0		X	03->	96316634	**KCR11102**	
NEXIA						
1.5 - 1.5 16V		X	95-97	2667886	**KCR21007**	
NEXIA Tre volumi						
1.5 - 1.5 16V		X	95-97	2667886	**KCR21007**	
NUBIRA						
1.6 16V		X	97-99	2667886	**KCR21007**	
2.0 16V		X	97->	2667886	**KCR21007**	
NUBIRA Tre volumi						
1.6 16V - 2.0 16V		X	97->	2667886	**KCR21007**	
NUBIRA Wagon						
1.6 16V - 2.0 16V		X	97->	2667886	**KCR21007**	

DAIHATSU

MODELLO MODEL	ASS.ANT. FRONT AXLE	ASS.POS. REAR AXLE	ANNO YEAR	RIF ORIGINALE ORIGINAL REF	RIF CORAM CORAM REF	NOTE NOTES
CHARADE						
1.33 16V	X		11->	90363-W005	**KCR26002**	
CHARADE VIII						
1.33 16V		X	11->	42450-0D050	**KMR26003**	SI ABS

DS

MODELLO MODEL	ASS.ANT. FRONT AXLE	ASS.POS. REAR AXLE	ANNO YEAR	RIF ORIGINALE ORIGINAL REF	RIF CORAM CORAM REF	NOTE NOTES
3						
1.2 THP 110 - 1.6 BlueHDi 100	X		14-19	3350.72	**KCR10001**	SI ABS
1.2 THP 110 - 1.6 BlueHDi 100	X		14-19	1606374680	**KCR12002**	SI ABS
1.2 THP 110 - 1.6 BlueHDi 100		X	14-19	3748.A1	**KCR10003**	
1.2 THP 130	X		15-19	3350.72	**KCR10001**	SI ABS
1.2 THP 130	X		15-19	1606374680	**KCR12002**	SI ABS
1.2 THP 130		X	15-19	3748.A1	**KCR10003**	
1.2 Vti 82 - 1.6 BlueHDi 120	X		13-19	3350.72	**KCR10001**	SI ABS
1.2 Vti 82 - 1.6 BlueHDi 120	X		13-19	1606374680	**KCR12002**	SI ABS
1.2 Vti 82 - 1.6 BlueHDi 120		X	13-19	3748.A1	**KCR10003**	
1.4 Hdi 70 - 1.4 Vti 95 - 1.6 THP 155 - 1.6 Vti 120	X		ott-15	3350.72	**KCR10001**	SI ABS
1.4 Hdi 70 - 1.4 Vti 95 - 1.6 THP 155 - 1.6 Vti 120	X		ott-15	1606374680	**KCR12002**	SI ABS
1.4 Hdi 70 - 1.4 Vti 95 - 1.6 THP 155 - 1.6 Vti 120		X	ott-15	3748.A1	**KCR10003**	
1.4 Vti 95 LPG - 1.6 Hdi 115	X		dic-15	3350.72	**KCR10001**	SI ABS
1.4 Vti 95 LPG - 1.6 Hdi 115	X		dic-15	1606374680	**KCR12002**	SI ABS
1.4 Vti 95 LPG - 1.6 Hdi 115		X	dic-15	3748.A1	**KCR10003**	
1.4 Vti 98 - 1.6 Hdi 90 - 1.6 Hdi 110	X		set-15	3350.72	**KCR10001**	SI ABS
1.4 Vti 98 - 1.6 Hdi 90 - 1.6 Hdi 110	X		set-15	1606374680	**KCR12002**	SI ABS
1.4 Vti 98 - 1.6 Hdi 90 - 1.6 Hdi 110		X	set-15	3748.A1	**KCR10003**	
1.6 BlueHDi 75	X		15-19	3350.72	**KCR10001**	SI ABS
1.6 BlueHDi 75	X		15-19	1606374680	**KCR12002**	SI ABS
1.6 BlueHDi 75		X	15-19	3748.A1	**KCR10003**	
1.6 Racing	X		nov-15	3350.72	**KCR10001**	SI ABS
1.6 Racing	X		nov-15	1606374680	**KCR12002**	SI ABS
1.6 Racing		X	nov-15	3748.A1	**KCR10003**	
1.6 THP 165 - 1.6 THP 208	X		15-19	3350.72	**KCR10001**	SI ABS
1.6 THP 165 - 1.6 THP 208	X		15-19	1606374680	**KCR12002**	SI ABS
1.6 THP 165 - 1.6 THP 208		X	15-19	3748.A1	**KCR10003**	

follow DS

MODELLO MODEL	ASS.ANT. FRONT AXLE	ASS.POS. REAR AXLE	ANNO YEAR	RIF ORIGINALE ORIGINAL REF	RIF CORAM CORAM REF	NOTE NOTES
3 Cabriolet						
1.2 THP 110 - 1.6 BlueHDi 100 - 1.6 BlueHDi 120	X		14-19	3350.72	**KCR10001**	SI ABS
1.2 THP 110 - 1.6 BlueHDi 100 - 1.6 BlueHDi 120	X		14-19	1606374680	**KCR12002**	SI ABS
1.2 THP 110 - 1.6 BlueHDi 100 - 1.6 BlueHDi 120		X	14-19	3748.A1	**KCR10003**	
1.2 THP 130	X		15-19	3350.72	**KCR10001**	SI ABS
1.2 THP 130	X		15-19	1606374680	**KCR12002**	SI ABS
1.2 THP 130		X	15-19	3748.A1	**KCR10003**	
1.2 Vti 82	X		13-19	3350.72	**KCR10001**	SI ABS
1.2 Vti 82	X		13-19	1606374680	**KCR12002**	SI ABS
1.2 Vti 82		X	13-19	3748.A1	**KCR10003**	
1.6 Hdi 90 - 1.6 THP 150 - 1.6 THP 155 - 1.6 Vti 120	X		13-15	3350.72	**KCR10001**	SI ABS
1.6 Hdi 90 - 1.6 THP 150 - 1.6 THP 155 - 1.6 Vti 120	X		13-15	1606374680	**KCR12002**	SI ABS
1.6 Hdi 90 - 1.6 THP 150 - 1.6 THP 155 - 1.6 Vti 120	X		13-15	3748.A1	**KCR10003**	
1.6 Racing		X	14-15	3350.72	**KCR10001**	SI ABS
1.6 Racing	X		14-15	1606374680	**KCR12002**	SI ABS
1.6 Racing		X	14-15	3748.A1	**KCR10003**	
1.6 THP 208	X		15-19	3350.72	**KCR10001**	SI ABS
1.6 THP 208	X		15-19	1606374680	**KCR12002**	SI ABS
1.6 THP 208		X	15-19	3748.A1	**KCR10003**	
1.6 THP165	X		14-19	3350.72	**KCR10001**	SI ABS
1.6 THP165	X		14-19	1606374680	**KCR12002**	SI ABS
1.6 THP165		X	14-19	3748.A1	**KCR10003**	
4						
1.2 THP 130 - 1.6 BlueHDi 115 - 1.6 BlueHDi 120	X		14-15	1606374680	**KCR12002**	SI ABS
1.6 Hdi 110 - 1.6 Hdi 90 - 1.6 THP 155 - 1.6 THP 200	X		nov-15	1606374680	**KCR12002**	SI ABS
1.6 Hdi 115 - 1.6 THP 160	X		dic-15	1606374680	**KCR12002**	SI ABS
1.6 Vti 120 - 2.0 Hdi / BlueHDi 135 - 2.0 Hdi 165	X		nov-15	1606374680	**KCR12002**	SI ABS
2.0 BlueHDi 150 - 2.0 BlueHDi 180	X		14-15	1606374680	**KCR12002**	SI ABS
4 CROSBACK						
1.2 THP 130 - 1.6 BlueHDi 120 - 1.6 THP 165	X		15-18	1606374680	**KCR12002**	SI ABS
1.6 BlueHDi 100	X		16-18	1606374680	**KCR12002**	SI ABS
1.6 THP 210 - 2.0 BlueHDi 150 - 2.0 BlueHDi 180	X		15-18	1606374680	**KCR12002**	SI ABS

follow DS

MODELLO MODEL	ASS.ANT. FRONT AXLE	ASS.POS. REAR AXLE	ANNO YEAR	RIF ORIGINALE ORIGINAL REF	RIF CORAM CORAM REF	NOTE NOTES
5						
1.6 BlueHDi 115 - 1.6 THP 165 - 2.0 Hybrid 4x4	X		15-18	1606374680	**KCR12002**	SI ABS
1.6 BlueHDi 120	X		14-18	1606374680	**KCR12002**	SI ABS
1.6 Hdi	X		13-15	1606374680	**KCR12002**	SI ABS
1.6 Hdi 110 - 1.6 THP 155 - 1.6 THP 200 -	X		nov-15	1606374680	**KCR12002**	SI ABS
1.6 Hdi 115 - 1.6 THP 165 Hybrid	X		dic-15	1606374680	**KCR12002**	SI ABS
2.0 BlueHDi 150	X		14-18	1606374680	**KCR12002**	SI ABS
2.0 BlueHDi 180	X		13-18	1606374680	**KCR12002**	SI ABS
2.0 Hdi 135 - 2.0 Hdi 165 - 2.0 Hdi Hybrid 4x4	X		nov-15	1606374680	**KCR12002**	SI ABS

FIAT

MODELLO MODEL	ASS.ANT. FRONT AXLE	ASS.POS. REAR AXLE	ANNO YEAR	RIF ORIGINALE ORIGINAL REF	RIF CORAM CORAM REF	NOTE NOTES
127						
0.9	X		71-84	5937306	**KCR12012**	
1.0	X		77-86	5937306	**KCR12012**	
1.0 Sport	X		78-82	5937306	**KCR12012**	
1.3 Diesel	X		81-86	5937306	**KCR12012**	
1.3 Sport	X		81-83	5937306	**KCR12012**	
127 Panorama						
1.0	X		77-86	5937306	**KCR12012**	
1.3 D	X		81-86	5937306	**KCR12012**	
128						
1.1	X		69-84	5937306	**KCR12012**	
128 Familiare						
1.1	X		69-82	5937306	**KCR12012**	
1.3	X		74-82	5937306	**KCR12012**	
500						
0.9 - 1.2 LPG - Electric		X	10->	46512973	**KMR12001**	SI ABS
0.9 - Electric	X		10->	1587565	**KCR12001**	SI ABS
1.2	X		07->	46531160	**KCR12005**	SI ABS
1.2 - 1.3 D Multijet - 1.4		X	07->	46512973	**KMR12001**	SI ABS
1.2 LPG	X		10->	46531160	**KCR12005**	SI ABS
1.3 D Multijet - 1.4	X		07->	1587565	**KCR12001**	SI ABS

follow FIAT

MODELLO MODEL	ASS.ANT. FRONT AXLE	ASS.POS. REAR AXLE	ANNO YEAR	RIF ORIGINALE ORIGINAL REF	RIF CORAM CORAM REF	NOTE NOTES
500C						
0.9	X		12->	1587565	**KCR12001**	SI ABS
0.9 - 1.2 - 1.3 D Multijet - 1.4		X	09->	46512973	**KMR12001**	SI ABS
1.2 - 1.3 D Multijet - 1.4	X		09->	1587565	**KCR12001**	SI ABS
500L						
0.9 - 1.3 D Multijet - 1.4	X		12->	46836196	**KCR12004**	SI ABS
0.9 Natural Power	X		13->	46836196	**KCR12004**	SI ABS
1.4 LPG	X		14->	46836196	**KCR12004**	SI ABS
1.6 D Multijet	X		dic-18	46836196	**KCR12004**	SI ABS
BARCHETTA						
1.8 16V	X		95-05	1587565	**KCR12001**	SI ABS
1.8 16V		X	95-05	46512973	**KMR12001**	SI ABS
1.8 16V		X	95-05	46453887	**KMR12102**	
1.8 16V	X		95-05	46423869	**KCR12009**	

follow FIAT

MODELLO MODEL	ASS.ANT. FRONT AXLE	ASS.POS. REAR AXLE	ANNO YEAR	RIF ORIGINALE ORIGINAL REF	RIF CORAM CORAM REF	NOTE NOTES
BRAVA						
1.2 16V 80	X		98-02	46527732	**KCR12003**	SI ABS
1.2 16V 80		X	98-02	46512973	**KMR12001**	SI ABS
1.2 16V 80	X		98-02	46423871	**KCR12006**	
1.2 16V 80		X	98-02	46453887	**KMR12102**	
1.4		X	95-01	46512973	**KMR12001**	SI ABS
1.4	X		95-01	46423871	**KCR12006**	
1.4		X	95-01	46453887	**KMR12102**	
1.4 12V	X		95-98	46423871	**KCR12006**	
1.4 12V		X	95-98	46453887	**KMR12102**	
1.6 16V	X		96-01	46527732	**KCR12003**	SI ABS
1.6 16V - 1.8 GT 16V - 1.9 D		X	95-01	46512973	**KMR12001**	SI ABS
1.6 16V - 1.8 GT 16V - 1.9 D		X	95-01	46453887	**KMR12102**	
1.6 16V - 1.9 D	X		95-01	46423871	**KCR12006**	
1.6 16V - 1.9 TD 100 S - 1.9 TD 75 S	X		96-01	1587565	**KCR12001**	SI ABS
1.6 16V - 1.9 TD 100 S - 1.9 TD 75 S	X		96-01	46423869	**KCR12009**	
1.8 GT 16V	X		95-01	1587565	**KCR12001**	SI ABS
1.8 GT 16V	X		95-01	46423869	**KCR12009**	
1.9 JTD	X		00-01	1587565	**KCR12001**	SI ABS
1.9 JTD		X	00-01	46512973	**KMR12001**	SI ABS
1.9 JTD		X	00-01	46453887	**KMR12102**	
1.9 JTD	X		00-01	46423869	**KCR12009**	
1.9 JTD 105	X		98-01	1587565	**KCR12001**	SI ABS
1.9 JTD 105		X	98-01	46512973	**KMR12001**	SI ABS
1.9 JTD 105		X	98-01	46453887	**KMR12102**	
1.9 JTD 105	X		98-01	46423869	**KCR12009**	
1.9 TD 100 S - 1.9 TD 75 S		X	96-01	46512973	**KMR12001**	SI ABS
1.9 TD 100 S - 1.9 TD 75 S		X	96-01	46453887	**KMR12102**	

follow FIAT

MODELLO MODEL	ASS.ANT. FRONT AXLE	ASS.POS. REAR AXLE	ANNO YEAR	RIF ORIGINALE ORIGINAL REF	RIF CORAM CORAM REF	NOTE NOTES
BRAVO						
1.2 16V 80	X		98-00	46527732	**KCR12003**	SI ABS
1.2 16V 80		X	98-00	46512973	**KMR12001**	SI ABS
1.2 16V 80	X		98-01	46423871	**KCR12006**	
1.2 16V 80		X	98-01	46453887	**KMR12102**	
1.4	X		95-01	46423871	**KCR12006**	
1.4 - 1.6 16V - 1.8 GT - 1.9 D		X	95-01	46512973	**KMR12001**	SI ABS
1.4 - 1.6 16V - 1.8 GT - 1.9 D		X	95-01	46453887	**KMR12102**	
1.6 16V	X		95-01	46527732	**KCR12003**	SI ABS
1.6 16V - 1.9 D	X		95-01	46423871	**KCR12006**	
1.8 GT	X		95-01	1587565	**KCR12001**	SI ABS
1.8 GT	X		95-01	46423869	**KCR12009**	
1.9 JTD	X		00-01	1587565	**KCR12001**	SI ABS
1.9 JTD		X	00-01	46512973	**KMR12001**	SI ABS
1.9 JTD		X	00-01	46453887	**KMR12102**	
1.9 JTD	X		00-01	46423869	**KCR12009**	
1.9 JTD 105	X		98-01	1587565	**KCR12001**	SI ABS
1.9 JTD 105	X		98-01	46423869	**KCR12009**	
1.9 JTD 105 - 2.0 HGT 20V		X	98-01	46512973	**KMR12001**	SI ABS
1.9 JTD 105 - 2.0 HGT 20V		X	98-01	46453887	**KMR12102**	
1.9 TD 100 S - 1.9 TD 75 S		X	96-01	46512973	**KMR12001**	SI ABS
1.9 TD 100 S - 1.9 TD 75 S		X	96-01	46453887	**KMR12102**	
1.9 TD 100 S - 1.9 TD 75 S	X		96-01	46423869	**KCR12009**	
1.9 TD 75 S	X		96-01	1587565	**KCR12001**	SI ABS
BRAVO II						
1.4 - 1.4 T-Jet - 1.6 D Multijet	X		lug-14	46836196	**KCR12004**	SI ABS
1.4 - 1.4 T-Jet - 1.6 D Multijet		X	lug-14	46512973	**KMR12001**	SI ABS
1.4 16V	X		ott-14	46836196	**KCR12004**	SI ABS
1.4 16V		X	ott-14	46512973	**KMR12001**	SI ABS
1.4 LPG	X		ago-14	46836196	**KCR12004**	SI ABS
1.4 LPG - 2.0 D Multijet		X	ago-14	46512973	**KMR12001**	SI ABS
1.9 D Multijet	X		giu-14	46836196	**KCR12004**	SI ABS
1.9 D Multijet	X		lug-14	46836200	**KCR12010**	SI ABS
2.0 D Multijet	X		ago-14	46836200	**KCR12010**	SI ABS
BRAVO Van						
1.6 JTD	X		ago-14	46836196	**KCR12004**	SI ABS
1.6 JTD		X	ago-14	46512973	**KMR12001**	SI ABS

follow FIAT

MODELLO MODEL	ASS.ANT. FRONT AXLE	ASS.POS. REAR AXLE	ANNO YEAR	RIF ORIGINALE ORIGINAL REF	RIF CORAM CORAM REF	NOTE NOTES
CINQUECENTO						
0.7	X		91-96	46423870	**KCR12008**	
0.7 i - 1.1 iE - 1.1 Sporting		X	94-98	4399856	**KMR12004**	
0.7 i - 1.1 Sporting	X		94-98	46423870	**KCR12008**	
0.9		X	91-93	4399856	**KMR12004**	
0.9	X		91-93	46423870	**KCR12008**	
0.9 i.e		X	91-94	4399856	**KMR12004**	
0.9 i.e	X		91-94	46423870	**KCR12008**	
0.9 i.e. S		X	91-99	4399856	**KMR12004**	
0.9 i.e. S	X		91-99	46423870	**KCR12008**	
0.9 Ie		X	91-98	4399856	**KMR12004**	
CINQUECENTO VAN						
0.9 iE	X		91-989	46423870	**KCR12008**	
1.1 iE	X		94-98	46423870	**KCR12008**	
COUPE						
1.8 16V		X	96-00	46453887	**KMR12102**	
1.8 16V - 2.0 20V	X		96-00	46423869	**KCR12009**	
2.0 16V	X		93-96	46423869	**KCR12009**	
CROMA						
1.8 16V - 2.2 16V - 2.4 D Multijet	X		05->	51748680	**KMR12006**	
1.8 16V - 2.2 16V - 2.4 D Multijet		X	05->	51749115	**KMR20005**	SI ABS
1.9 D Multijet	X		05-nov	51748680	**KMR12006**	
1.9 D Multijet		X	05-nov	51749115	**KMR20005**	SI ABS
CROMA Cassone						
1.9 MJTD	X		06-nov	51748680	**KMR12006**	
1.9 MJTD		X	06-nov	51749115	**KMR20005**	SI ABS

follow FIAT

MODELLO MODEL	ASS.ANT. FRONT AXLE	ASS.POS. REAR AXLE	ANNO YEAR	RIF ORIGINALE ORIGINAL REF	RIF CORAM CORAM REF	NOTE NOTES
DOBLO Cargo						
1.2		X	01->	46554134	**KMR12003**	SI ABS
1.2	X		01->	46423869	**KCR12009**	
1.3 D Multijet	X		05-ott	1587565	**KCR12001**	SI ABS
1.3 D Multijet		X	05-ott	46554134	**KMR12003**	SI ABS
1.3 D Multijet	X		05-ott	46423869	**KCR12009**	
1.3 JTD 16V	X		04-giu	1587565	**KCR12001**	SI ABS
1.3 JTD 16V		X	04-giu	46554134	**KMR12003**	SI ABS
1.3 JTD 16V	X		04-giu	46423869	**KCR12009**	
1.3 JTD 16V Multijet - 1.9 JTD Multijet	X		06->	1587565	**KCR12001**	SI ABS
1.3 JTD 16V Multijet - 1.9 JTD Multijet		X	06->	46554134	**KMR12003**	SI ABS
1.3 JTD 16V Multijet - 1.9 JTD Multijet	X		06->	46423869	**KCR12009**	
1.4		X	05->	46554134	**KMR12003**	SI ABS
1.6 16V - 1.9 D - 1.9 JTD		X	01->	46554134	**KMR12003**	SI ABS
1.6 Natural Power	X		02->	1587565	**KCR12001**	SI ABS
1.6 Natural Power		X	02->	46554134	**KMR12003**	SI ABS
1.6 Natural Power	X		02->	46423869	**KCR12009**	
1.9 JTD	X		01->	1587565	**KCR12001**	SI ABS
1.9 JTD	X		01->	46423869	**KCR12009**	
DOBLO Cassone						
1.3 D Multijet - 1.4 - 1.6 D Multijet - 2.0 D Multijet	X		10->	46836196	**KCR12004**	SI ABS
1.4 Natural Power - 1.6 D Multijet - 2.0 Dmultijet	X		10->	46836200	**KCR12010**	SI ABS
DOBLO Combi						
1.3 D Multijet - 1.4 - 1.6 D Multijet	X		10->	46836196	**KCR12004**	SI ABS
1.4 - 1.4 Natural Power - 1.6 D Multijet - 2.0 D Multijet	X		10->	46836200	**KCR12010**	SI ABS
DOBLO Pianale piatto						
1.3 D Multijet - 1.4 - 1.4 Natural Power	X		10->	46836196	**KCR12004**	SI ABS
1.6 D Multijet - 2.0 D Multijet	X		10->	46836196	**KCR12004**	SI ABS
1.6 D Multijet - 2.0 D Multijet	X		10->	46836200	**KCR12010**	SI ABS

follow FIAT

MODELLO MODEL	ASS.ANT. FRONT AXLE	ASS.POS. REAR AXLE	ANNO YEAR	RIF ORIGINALE ORIGINAL REF	RIF CORAM CORAM REF	NOTE NOTES
DOBLO Space wagon						
1.2 - 1.6 16V - 1.9 D - 1.9 JTD		X	01->	46554134	**KMR12003**	SI ABS
1.3 D Multijet - 1.4 - 1.9 D Multijet		X	05->	46554134	**KMR12003**	SI ABS
1.3 D Multijet - 1.9 D Multijet	X		05->	1587565	**KCR12001**	SI ABS
1.3 D Multijet - 1.9 D Multijet	X		05->	46423869	**KCR12009**	
1.3 JTD 16V		X	04-mag	46554134	**KMR12003**	SI ABS
1.3 JTD 16V	X		04-mag	46423869	**KCR12009**	
1.6 Natural Power	X		02->	1587565	**KCR12001**	SI ABS
1.6 Natural Power		X	02->	46554134	**KMR12003**	SI ABS
1.6 Natural Power	X		02->	46423869	**KCR12009**	
1.9 JTD	X		01->	1587565	**KCR12001**	SI ABS
1.9 JTD	X		01->	46423869	**KCR12009**	

follow FIAT

MODELLO MODEL	ASS.ANT. FRONT AXLE	ASS.POS. REAR AXLE	ANNO YEAR	RIF ORIGINALE ORIGINAL REF	RIF CORAM CORAM REF	NOTE NOTES
DUCATO Autobus						
1.9 D - 1.9 TD - 2.8 D	X		98-02	1328046080	**KCR10102**	
1.9 D - 1.9 TD - 2.8 D	X		98-02	1300525080	**KCR10104**	
1.9 D - 1.9 TD - 2.8 D		X	98-02	4330648	**KCR10105**	
1.9 D - 1.9 TD - 2.8 D	X		98-02	4330647	**KCR12007**	
1.9 D - 1.9 TD - 2.8 D		X	00-02	1328029080	**KCR12011**	
1.9 D - 1.9 TD - 2.8 D	X		00-02	3326.63	**KCR10106**	
1.9 D Combinato	X		95-02	1328046080	**KCR10102**	
1.9 D Combinato	X		95-02	1300525080	**KCR10104**	
1.9 D Combinato		X	95-02	4330648	**KCR10105**	
1.9 D Combinato	X		95-02	4330647	**KCR12007**	
1.9 D Combinato		X	95-02	1328029080	**KCR12011**	
1.9 D Combinato	X		95-02	3326.63	**KCR10106**	
1.9 TD Combinato - 1.9 TD Panorama - 2.0 Panorama	X		94-02	1328046080	**KCR10102**	
1.9 TD Combinato - 1.9 TD Panorama - 2.0 Panorama	X		94-02	1300525080	**KCR10104**	
1.9 TD Combinato - 1.9 TD Panorama - 2.0 Panorama		X	94-02	4330648	**KCR10105**	
1.9 TD Combinato - 1.9 TD Panorama - 2.0 Panorama	X		94-02	4330647	**KCR12007**	
1.9 TD Combinato - 1.9 TD Panorama - 2.0 Panorama		X	94-02	1328029080	**KCR12011**	
1.9 TD Combinato - 1.9 TD Panorama - 2.0 Panorama	X		94-02	3326.63	**KCR10106**	
100 Multijet 2.2 D	X		06-nov	51745702	**KCR12002**	SI ABS
100 Multijet 2.2 D		X	06-nov	51754942	**KMR12007**	SI ABS
110 Multijet 2.3 D - 115 Multijet 2.0 D		X	11->	51754942	**KMR12007**	SI ABS
110 Multijet 2.3 D - 115 Multijet 2.0 D - 150 Multijet 2.3	X		11->	51745702	**KCR12002**	SI ABS
120 Multijet 2.3 D	X		06->	51745702	**KCR12002**	SI ABS
120 Multijet 2.3 D		X	06->	51754942	**KMR12007**	SI ABS
130 Multijet 2.3 D - 130 Multijet 2.3 D 4x4 - 180 Multijet 3.0 D		X	11->	51754942	**KMR12007**	SI ABS
130 Multijet 2.3 D - 180 Multijet 3.0 D	X		11->	51745702	**KCR12002**	SI ABS
140 Multijet 2.3 D	X		19->	51745702	**KCR12002**	SI ABS
140 Multijet 2.3 D - 160 Multijet 2.3 D		X	19->	51754942	**KMR12007**	SI ABS
140 Multijet 3.0 D	X		giu-14	51745702	**KCR12002**	SI ABS
140 Multijet 3.0 D		X	giu-14	51754942	**KMR12007**	SI ABS
140 Natural Power	X		09->	51745702	**KCR12002**	SI ABS
140 Natural Power		X	09->	51754942	**KMR12007**	SI ABS
150 Multijet 2.3 D	X		15->	51745702	**KCR12002**	SI ABS
150 Multijet 2.3 D 4x4		X	15->	51754942	**KMR12007**	SI ABS
150 Multijet 3.0 D	X		10->	51745702	**KCR12002**	SI ABS
150 Multijet 3.0 D		X	10->	51754942	**KMR12007**	SI ABS
160 Multijet 2.3 D - 180 Multijet 2.3 D	X		19->	51745702	**KCR12002**	SI ABS
160 Multijet 3.0 D	X		06->	51745702	**KCR12002**	SI ABS
160 Multijet 3.0 D - 160 Multijet 3.0 D 4x4		X	06->	51754942	**KMR12007**	SI ABS
2.0 - 2.0 Bipower - 2.3 JTD	X		02->	1328046080	**KCR10102**	
2.0 - 2.0 Bipower - 2.3 JTD		X	02->	1328029080	**KCR12011**	
2.0 - 2.0 Bipower - 2.3 JTD	X		94-02	3326.63	**KCR10106**	
2.0 4x4	X		94-06	1328046080	**KCR10102**	
2.0 4x4	X		94-01	1300525080	**KCR10104**	
2.0 4x4	X		94-01	4330647	**KCR12007**	

follow FIAT

MODELLO MODEL	ASS.ANT. FRONT AXLE	ASS.POS. REAR AXLE	ANNO YEAR	RIF ORIGINALE ORIGINAL REF	RIF CORAM CORAM REF	NOTE NOTES
DUCATO Furgonato						
1.9 D - 1.9 TD - 1.9 TD CAT - 2.0 - 2.0 4x4	X		94-02	1300525080	**KCR10104**	
1.9 D - 1.9 TD - 1.9 TD CAT - 2.0 - 2.5 D - 2.5 TDI		X	94-02	4330648	**KCR10105**	
1.9 D - 1.9 TD - 1.9 TD CAT - 2.5 D - 2.5 D 4x4 - 2.5 TDI	X		94-02	1328046080	**KCR10102**	
1.9 D - 1.9 TD - 1.9 TD CAT - 2.5 D - 2.5 TDI		X	94-02	1328029080	**KCR12011**	
1.9 D - 1.9 TD - 1.9 TD CAT - 2.5 D - 2.5 TDI	X		94-02	3326.63	**KCR10106**	
1.9 TD	X		89-94	4330647	**KCR12007**	
1.9 TD CAT - 2.0 - 2.0 4x4 - 2.5 TDI	X		94-02	4330647	**KCR12007**	
100 Multijet 2.2 D	X		06->	51745702	**KCR12002**	SI ABS
100 Multijet 2.2 D - 120 Multijet 2.3 D - 160 Multijet 3.0 D 4x4		X	06->	51754942	**KMR12007**	SI ABS
110 Multijet 2.3 D - 115 Multijet 2.0 D	X		11->	51745702	**KCR12002**	SI ABS
110 Multijet 2.3 D - 115 Multijet 2.0 D - 150 Multijet 2.3 D		X	11->	51754942	**KMR12007**	SI ABS
120 Multijet 2.3 D	X		06->	51745702	**KCR12002**	SI ABS
120 Multijet 2.3 D 4x4 - 150 Multijet 3.0 D	X		10->	51745702	**KCR12002**	SI ABS
120 Multijet 2.3 D 4x4 - 150 Multijet 3.0 D		X	10->	51754942	**KMR12007**	SI ABS
130 Multijet 2.3 D - 130 Multijet 2.3 D 4x4 - 180 Multijet 3.0 D		X	11->	51754942	**KMR12007**	SI ABS
130 Multijet 2.3 D - 180 Multijet 3.0 D	X		11->	51745702	**KCR12002**	SI ABS
140 Multijet 2.3 D	X		19->	51745702	**KCR12002**	SI ABS
140 Multijet 2.3 D - 160 Multijet 2.3 D		X	19->	51754942	**KMR12007**	SI ABS
140 Multijet 3.0 D	X		giu-14	51745702	**KCR12002**	SI ABS
140 Natural Power	X		09->	51745702	**KCR12002**	SI ABS
140 Natural Power		X	09->	51754942	**KMR12007**	SI ABS
141 Multijet 3.0 D		X	giu-14	51754942	**KMR12007**	SI ABS
150 Multijet 2.3 D	X		11->	51745702	**KCR12002**	SI ABS
150 Multijet 2.3 D 4x4 - 180 Multijet 2.3 D		X	15->	51754942	**KMR12007**	SI ABS
160 Multijet 2.3 D	X		19->	51745702	**KCR12002**	SI ABS
160 Multijet 3.0 D	X		06-nov	51745702	**KCR12002**	SI ABS
160 Multijet 3.0 D		X	06-nov	51754942	**KMR12007**	SI ABS
180 Multijet 2.3 D	X		15->	51745702	**KCR12002**	SI ABS
2.0	X		94-06	1328046080	**KCR10102**	
2.0	X		82-94	4330647	**KCR12007**	
2.0		X	94->	1328029080	**KCR12011**	
2.0	X		94->	3326.63	**KCR10106**	
2.0 4x4	X		94-06	3326.63	**KCR10106**	
2.0 Bipower - 2.3 JTD		X	02->	1328029080	**KCR12011**	
2.0 Bipower - 2.3 JTD	X		02->	3326.63	**KCR10106**	
2.0 JTD	X		01-giu	1328046080	**KCR10102**	
2.0 JTD	X		01-feb	1300525080	**KCR10104**	
2.0 JTD		X	01-feb	4330648	**KCR10105**	
2.0 JTD	X		01-feb	4330647	**KCR12007**	
2.0 JTD		X	01->	1328029080	**KCR12011**	
2.0 JTD	X		01->	3326.63	**KCR10106**	
2.0 LPG		X	02-giu	1328029080	**KCR12011**	
2.0 LPG	X		02-giu	3326.63	**KCR10106**	
2.3 JTD	X		02-giu	1328046080	**KCR10102**	
2.4 D - 2.5 D	X		82-90	4330647	**KCR12007**	

follow FIAT

MODELLO MODEL	ASS.ANT. FRONT AXLE	ASS.POS. REAR AXLE	ANNO YEAR	RIF ORIGINALE ORIGINAL REF	RIF CORAM CORAM REF	NOTE NOTES
DUCATO Pianale piatto						
1.9 D	X		88-90	4330647	**KCR12007**	
1.9 D - 1.9 TD - 1.9 TD CAT - 2.0 - 2.5 D - 2.5 D 4x4 - 2.5 TDI	X		94-02	3326.63	**KCR10106**	
1.9 D - 1.9 TD - 1.9 TD CAT - 2.0 - 2.5 D - 2.5 D 4x4 - 2.5 TDI	X		94-02	1300525080	**KCR10104**	
1.9 D - 1.9 TD - 1.9 TD CAT - 2.0 - 2.5 D - 2.5 TDI		X	94-02	4330648	**KCR10105**	
1.9 D - 1.9 TD - 1.9 TD CAT - 2.5 D - 2.5 TDI		X	94-02	1328029080	**KCR12011**	
1.9 D - 1.9 TD - 1.9 TD CAT - 2.5 D - 2.5 TDI	X		94-02	1328046080	**KCR10102**	
1.9 D - 1.9 TD CAT - 2.5 TDI	X		94-02	4330647	**KCR12007**	
1.9 TD	X		89-02	4330647	**KCR12007**	
100 Multijet 2.2 D	X		06->	51745702	**KCR12002**	SI ABS
100 Multijet 2.2 D- 110 Multijet 2.3 D - 160 Multijet 3.0 D		X	06->	51754942	**KMR12007**	SI ABS
110 Multijet 2.3 D - 115 Multijet 2.0 D - 180 Multijet 3.0 D	X		11->	51745702	**KCR12002**	SI ABS
115 Multijet 2.0 D - 150 Multijet 2.3 D - 180 Multijet 3.0 D		X	11->	51754942	**KMR12007**	SI ABS
120 Multijet 2.3 D - 130 Multijet 2.3 D	X		06->	51745702	**KCR12002**	SI ABS
120 Multijet 2.3 D - 130 Multijet 2.3 D		X	06->	51754942	**KMR12007**	SI ABS
120 Multijet 2.3 D 4x4 - 150 Multijet 3.0 D	X		10->	51745702	**KCR12002**	SI ABS
120 Multijet 2.3 D 4x4 - 150 Multijet 3.0 D		X	10->	51754942	**KMR12007**	SI ABS
140 Multijet 2.3 D - 160 Multijet 2.3 D	X		19->	51745702	**KCR12002**	SI ABS
140 Multijet 2.3 D - 160 Multijet 2.3 D		X	19->	51754942	**KMR12007**	SI ABS
140 Multijet 3.0 D	X		giu-14	51745702	**KCR12002**	SI ABS
140 Multijet 3.0 D		X	giu-14	51754942	**KMR12007**	SI ABS
140 Natural Power	X		09->	51745702	**KCR12002**	SI ABS
140 Natural Power		X	09->	51754942	**KMR12007**	SI ABS
150 Multijet 2.3 D	X		11->	51745702	**KCR12002**	SI ABS
160 Multijet 3.0 D	X		06-nov	51745702	**KCR12002**	SI ABS
160 Multijet 3.0 D		X	06-nov	51754942	**KMR12007**	SI ABS
180 Multijet 2.3 D	X		15->	51745702	**KCR12002**	SI ABS
180 Multijet 2.3 D		X	15->	51754942	**KMR12007**	SI ABS
2.0	X		85-02	4330647	**KCR12007**	
2.0		X	94-06	1328029080	**KCR12011**	
2.0 - 2.0 4x4	X		94->	1328046080	**KCR10102**	
2.0 Bipower - 2.3 JTD	X		02->	1328046080	**KCR10102**	
2.0 JTD	X		01->	1328046080	**KCR10102**	
2.0 JTD	X		01->	1300525080	**KCR10104**	
2.0 JTD		X	01-feb	4330648	**KCR10105**	
2.0 JTD	X		01-feb	4330647	**KCR12007**	
2.0 JTD		X	01->	1328029080	**KCR12011**	
2.0 JTD	X		01-feb	3326.63	**KCR10106**	
2.3 JTD		X	02-giu	1328029080	**KCR12011**	
2.3 JTD	X		02-giu	3326.63	**KCR10106**	
2.5 D - 2.5 D 4x4	X		89-02	4330647	**KCR12007**	
2.5 TD	X		94-98	1300525080	**KCR10104**	
2.5 TD		X	94-98	4330648	**KCR10105**	
2.5 TD	X		86-98	4330647	**KCR12007**	
2.5 TD 4x4	X		90-94	4330647	**KCR12007**	
2.5 TDI 4x4 - 2.8 D	X		98-02	3326.63	**KCR10106**	

follow FIAT

MODELLO MODEL	ASS.ANT. FRONT AXLE	ASS.POS. REAR AXLE	ANNO YEAR	RIF ORIGINALE ORIGINAL REF	RIF CORAM CORAM REF	NOTE NOTES
FIORINO						
900	X		77-86	5937306	**KCR12012**	
FIORINO Cassone						
1.3 D Multijet - 1.4		X	07->	46512973	**KMR12001**	SI ABS
1.4 Natural Power		X	08->	46512973	**KMR12001**	SI ABS
Ecargo	X		10-dic	1587565	**KCR12001**	SI ABS
Ecargo		X	10-dic	46512973	**KMR12001**	SI ABS
GRANDE PUNTO						
1.2 - 1.3 D Multijet - 1.9 D Multijet		X	05->	51787397	**KMR12002**	SI ABS
1.2 LPG - 1.4 LPG - 1.4 Natural Power - 1.6 D Multijet		X	08->	51787397	**KMR12002**	SI ABS
1.3 D Multijet - 1.9 D Multijet	X		05->	1587565	**KCR12001**	SI ABS
1.4		X	mag-15	51787397	**KMR12002**	SI ABS
1.4 16V		X	05-nov	51787397	**KMR12002**	SI ABS
1.4 T-Jet	X		07->	1587565	**KCR12001**	SI ABS
1.4 T-Jet		X	07->	51787397	**KMR12002**	SI ABS
1.6 D Multijet	X		08->	1587565	**KCR12001**	SI ABS
GRANDE PUNTO Van						
1.3 JTD Multijet - 1.4	X		giu-13	1587565	**KCR12001**	SI ABS
1.3 JTD Multijet - 1.4		X	giu-13	51787397	**KMR12002**	SI ABS
1.4 LPG - 1.4 Natural Power	X		09-dic	1587565	**KCR12001**	SI ABS
1.4 LPG - 1.4 Natural Power		X	09-dic	51787397	**KMR12002**	SI ABS
IDEA						
1.2 16V	X		04->	46527732	**KCR12003**	SI ABS
1.2 16V		X	04->	46512973	**KMR12001**	SI ABS
1.3 D Multijet	X		04-dic	1587565	**KCR12001**	SI ABS
1.3 D Multijet		X	04-dic	46512973	**KMR12001**	SI ABS
1.4	X		03->	46527732	**KCR12003**	SI ABS
1.4		X	03->	46512973	**KMR12001**	SI ABS
1.4 16V	X		04->	46527732	**KCR12003**	SI ABS
1.4 16V - 1.9 JTD		X	04->	46512973	**KMR12001**	SI ABS
1.4 LPG	X		09->	46527732	**KCR12003**	SI ABS
1.4 LPG		X	09->	46512973	**KMR12001**	SI ABS
1.6 D Multijet	X		08->	1587565	**KCR12001**	SI ABS
1.6 D Multijet		X	08->	46512973	**KMR12001**	SI ABS
1.9 JTD	X		04->	1587565	**KCR12001**	SI ABS

follow FIAT

MODELLO MODEL	ASS.ANT. FRONT AXLE	ASS.POS. REAR AXLE	ANNO YEAR	RIF ORIGINALE ORIGINAL REF	RIF CORAM CORAM REF	NOTE NOTES
LINEA						
1.3 D Multijet	X		07->	1587565	**KCR12001**	SI ABS
1.3 D Multijet		X	07->	46512973	**KMR12001**	SI ABS
1.3 D Multijet	X		07->	46423869	**KCR12009**	
1.3 D Multijet - 1.4 - 1.4 T-Jet		X	07->	46453887	**KMR12102**	
1.3 JTD Multijet	X		06->	1587565	**KCR12001**	SI ABS
1.3 JTD Multijet		X	06->	46512973	**KMR12001**	SI ABS
1.3 JTD Multijet		X	06->	46453887	**KMR12102**	
1.3 JTD Multijet	X		06->	46423869	**KCR12009**	
1.4 - 1.4 T-Jet	X		07->	46527732	**KCR12003**	SI ABS
1.4 - 1.4 T-Jet		X	07->	46512973	**KMR12001**	SI ABS
1.6 D Multijet	X		09->	1587565	**KCR12001**	SI ABS
1.6 D Multijet		X	09->	46512973	**KMR12001**	SI ABS
1.6 D Multijet		X	09->	46453887	**KMR12102**	
1.6 D Multijet	X		09->	46423869	**KCR12009**	

follow FIAT

MODELLO MODEL	ASS.ANT. FRONT AXLE	ASS.POS. REAR AXLE	ANNO YEAR	RIF ORIGINALE ORIGINAL REF	RIF CORAM CORAM REF	NOTE NOTES
MAREA						
1.2 16V	X		98-02	46527732	**KCR12003**	SI ABS
1.2 16V		X	98-02	46512973	**KMR12001**	SI ABS
1.2 16V	X		98-02	46423871	**KCR12006**	
1.2 16V - 1.9 JTD 105		X	98-02	46453887	**KMR12102**	
1.4 80 12V	X		96-02	46527732	**KCR12003**	SI ABS
1.4 80 12V		X	96-02	46512973	**KMR12001**	SI ABS
1.4 80 12V	X		96-02	46423871	**KCR12006**	
1.4 80 12V		X	96-02	46453887	**KMR12102**	
1.6 - 1.6 SX - 1.9 JTD 110	X		00-02	1587565	**KCR12001**	SI ABS
1.6 - 1.6 SX - 1.9 JTD 110		X	00-02	46512973	**KMR12001**	SI ABS
1.6 - 1.6 SX - 1.9 JTD 110		X	00-02	46453887	**KMR12102**	
1.6 - 1.6 SX - 1.9 JTD 110	X		00-02	46423869	**KCR12009**	
1.6 100 16V - 1.8 115 16V - 1.9 TD 100 - 1.9 TD 75	X		96-02	1587565	**KCR12001**	SI ABS
1.6 100 16V - 1.8 115 16V - 1.9 TD 100 - 1.9 TD 75		X	96-02	46512973	**KMR12001**	SI ABS
1.6 100 16V - 1.8 115 16V - 1.9 TD 100 - 1.9 TD 75		X	96-02	46453887	**KMR12102**	
1.6 100 16V - 1.8 115 16V - 1.9 TD 100 - 1.9 TD 75	X		96-02	46423869	**KCR12009**	
1.6 100 16V Bipower	X		99-02	1587565	**KCR12001**	SI ABS
1.6 100 16V Bipower	X		99-02	46423869	**KCR12009**	
1.6 100 16V Bipower - 2.4 JTD 130		X	99-02	46512973	**KMR12001**	SI ABS
1.6 100 16V Bipower - 2.4 JTD 130		X	99-02	46453887	**KMR12102**	
1.9 JTD 105	X		98-02	1587565	**KCR12001**	SI ABS
1.9 JTD 105		X	98-02	46512973	**KMR12001**	SI ABS
1.9 JTD 105	X		98-02	46423869	**KCR12009**	
2.0 150 20V		X	96-02	46512973	**KMR12001**	SI ABS
2.0 150 20V		X	96-02	46453887	**KMR12102**	
2.0 155 20V		X	99-01	46512973	**KMR12001**	SI ABS
2.0 155 20V		X	99-01	46453887	**KMR12102**	
2.4 TD 125		X	96-99	46512973	**KMR12001**	SI ABS
2.4 TD 125		X	96-99	46453887	**KMR12102**	

follow FIAT

MODELLO MODEL	ASS.ANT. FRONT AXLE	ASS.POS. REAR AXLE	ANNO YEAR	RIF ORIGINALE ORIGINAL REF	RIF CORAM CORAM REF	NOTE NOTES
MAREA Weekend						
1.2 16V	X		98-02	46527732	**KCR12003**	SI ABS
1.2 16V		X	98-02	46512973	**KMR12001**	SI ABS
1.2 16V	X		98-02	46423871	**KCR12006**	
1.2 16V		X	98-02	46453887	**KMR12102**	
1.4 80 12V	X		96-02	46527732	**KCR12003**	SI ABS
1.4 80 12V		X	96-02	46512973	**KMR12001**	SI ABS
1.4 80 12V	X		96-02	46423871	**KCR12006**	
1.4 80 12V		X	96-02	46453887	**KMR12102**	
1.6 100 16V - 1.8 115 16V - 1.9 TD 75	X		96-02	1587565	**KCR12001**	SI ABS
1.6 100 16V - 1.8 115 16V - 1.9 TD 75	X		96-02	46423869	**KCR12009**	
1.6 100 16V - 1.8 115 16V - 1.9 TD 75 - 2.0 150 20V		X	96-02	46512973	**KMR12001**	SI ABS
1.6 100 16V - 1.8 115 16V - 1.9 TD 75 - 2.0 150 20V		X	96-02	46453887	**KMR12102**	
1.9 JTD 105	X		98-02	1587565	**KCR12001**	SI ABS
1.9 JTD 105		X	98-02	46512973	**KMR12001**	SI ABS
1.9 JTD 105		X	98-02	46453887	**KMR12102**	
1.9 JTD 105	X		98-02	46423869	**KCR12009**	
1.9 JTD 110	X		00-02	1587565	**KCR12001**	SI ABS
1.9 JTD 110		X	00-02	46512973	**KMR12001**	SI ABS
1.9 JTD 110		X	00-02	46453887	**KMR12102**	
1.9 JTD 110	X		00-02	46423869	**KCR12009**	
1.9 TD 100	X		96-03	1587565	**KCR12001**	SI ABS
1.9 TD 100		X	96-03	46512973	**KMR12001**	SI ABS
1.9 TD 100		X	96-03	46453887	**KMR12102**	
1.9 TD 100	X		96-03	46423869	**KCR12009**	
2.0 155 20V		X	99-03	46512973	**KMR12001**	SI ABS
2.0 155 20V		X	99-03	46453887	**KMR12102**	
2.4 JTD 130		X	99-02	46512973	**KMR12001**	SI ABS
2.4 JTD 130		X	99-02	46453887	**KMR12102**	
2.4 TD 125		X	96-99	46512973	**KMR12001**	SI ABS
2.4 TD 125		X	96-99	46453887	**KMR12102**	

follow FIAT

MODELLO MODEL	ASS.ANT. FRONT AXLE	ASS.POS. REAR AXLE	ANNO YEAR	RIF ORIGINALE ORIGINAL REF	RIF CORAM CORAM REF	NOTE NOTES
MULTIPLA						
1.6	X		00-10	1587565	**KCR12001**	SI ABS
1.6		X	00-10	46512973	**KMR12001**	SI ABS
1.6		X	00-10	46453887	**KMR12102**	
1.6	X		00-10	46423869	**KCR12009**	
1.6 100 16V - 1.6 16V Bipower		X	99-10	46512973	**KMR12001**	SI ABS
1.6 100 16V - 1.6 16V Bipower - 1.6 16V Blupower - 1.9 JTD 105	X		99-10	46423869	**KCR12009**	
1.6 100 16V - 1.6 16V Bipower - 1.6 16V Blupower - 1.9 JTD 115		X	99-10	46453887	**KMR12102**	
1.6 100 16V - 1.6 16V Bipower - 1.9 JTD 105	X		99-10	1587565	**KCR12001**	SI ABS
1.6 16V - 1.9 JTD - 1.9 JTD 115	X		02-ott	1587565	**KCR12001**	SI ABS
1.6 16V - 1.9 JTD - 1.9 JTD 115		X	02-ott	46453887	**KMR12102**	
1.6 16V - 1.9 JTD - 1.9 JTD 115		X	02-ott	46453887	**KMR12102**	
1.6 16V Blupower 1.9 JTD 105		X	99-10	46512973	**KMR12001**	SI ABS
1.6 16V GPL		X	01-ott	46512973	**KMR12001**	SI ABS
1.6 16V GPL		X	01-ott	46453887	**KMR12102**	
1.6 16V GPL	X		01-ott	46423869	**KCR12009**	
1.6 16V GPL - 1.9 JTD 110	X		01-ott	1587565	**KCR12001**	SI ABS
1.6 Natural power	X		08-ott	1587565	**KCR12001**	SI ABS
1.6 Natural power		X	08-ott	46512973	**KMR12001**	SI ABS
1.6 Natural power		X	08-ott	46453887	**KMR12102**	
1.6 Natural power	X		08-ott	46423869	**KCR12009**	
1.9 JTD - 1.9 JTD 115	X		02-ott	46423869	**KCR12009**	
1.9 JTD 110		X	01-feb	46512973	**KMR12001**	SI ABS
1.9 JTD 110		X	01-feb	46453887	**KMR12102**	
1.9 JTD 110	X		01-feb	46423869	**KCR12009**	
PALIO						
1.0		X	96-03	46512973	**KMR12001**	SI ABS
1.0		X	96-03	46453887	**KMR12102**	
1.2		X	97-02	46512973	**KMR12001**	SI ABS
1.2		X	97-02	46453887	**KMR12102**	
1.4 - 1.6 16V		X	96-02	46512973	**KMR12001**	SI ABS
1.4 - 1.6 16V		X	96-02	46453887	**KMR12102**	
1.4 Cat		X	96-01	46512973	**KMR12001**	SI ABS
1.4 Cat		X	96-01	46453887	**KMR12102**	

follow FIAT

MODELLO MODEL	ASS.ANT. FRONT AXLE	ASS.POS. REAR AXLE	ANNO YEAR	RIF ORIGINALE ORIGINAL REF	RIF CORAM CORAM REF	NOTE NOTES
PALIO Weekend						
1.2		X	97-04	46512973	**KMR12001**	SI ABS
1.2		X	96-04	46453887	**KMR12102**	
1.6 16V		X	96-12	46453887	**KMR12102**	
1.6 16V - 1.9 D		X	01-dic	46512973	**KMR12001**	SI ABS
1.7 TD		X	96-01	46453887	**KMR12102**	
1.9 D1.9 JTD		X	01->	46453887	**KMR12102**	
1.9 JTD		X	01->	46512973	**KMR12001**	SI ABS
PANDA						
0.9	X	X	12->	46531160	**KCR12005**	SI ABS
0.9 - 0.9 4x4 - 0.9 Natural Power	X		12->	1587565	**KCR12001**	SI ABS
0.9 - 0.9 Natural Power - 1.2 - 1.2 LPG - 1.3 D Multijet		X	12->	46512973	**KMR12001**	SI ABS
0.9 - 0.9 Natural Power - 1.2 - 1.2 LPG - 1.3 D Multijet	X		12->	46531160	**KCR12005**	SI ABS
1.3 D Multijet - 1.3 D Multijet 4x4	X		12->	1587565	**KCR12001**	SI ABS
1.3 D Multijet 4x4		X	12->	46531160	**KCR12005**	SI ABS
1000	X		85-92	5890994	**KMR12201**	
1000		X	85-92	4399856	**KMR12004**	
1000 4x4	X		86-94	5890994	**KMR12201**	
1000 4x4		X	86-94	4399856	**KMR12004**	
1000 4x4		X	86-94	4400918	**KMR12005**	
1000 i.e. Cat	X		87-98	5890994	**KMR12201**	
1000 i.e. Cat		X	87-98	4399856	**KMR12004**	
1100	X		91-03	5890994	**KMR12201**	
1100		X	91-03	4399856	**KMR12004**	
1100 4x4	X		95-04	5890994	**KMR12201**	
1100 4x4		X	95-04	4400918	**KMR12005**	
1100 Trekking 4x4		X	91-04	4400918	**KMR12005**	
1100 Trekking 4x4	X		91-04	5890994	**KMR12201**	
1300 D	X		86-92	5890994	**KMR12201**	
1300 D		X	86-92	4399856	**KMR12004**	
650	X		82-04	5890994	**KMR12201**	
650		X	82-04	4399856	**KMR12004**	
750	X		86-03	5890994	**KMR12201**	
750		X	86-03	4399856	**KMR12004**	
800	X		81-85	5890994	**KMR12201**	
900	X		80-96	5890994	**KMR12201**	
900		X	80-96	4399856	**KMR12004**	
950	X		82-83	5890994	**KMR12201**	
950 4x4	X		83-86	5890994	**KMR12201**	
950 4x4		X	83-86	4399856	**KMR12004**	

follow FIAT

MODELLO MODEL	ASS.ANT. FRONT AXLE	ASS.POS. REAR AXLE	ANNO YEAR	RIF ORIGINALE ORIGINAL REF	RIF CORAM CORAM REF	NOTE NOTES
PANDA Van						
0.9 - 0.9 4x4 - 0.9 Natural Power	X		12->	1587565	**KCR12001**	SI ABS
0.9 - 0.9 Natural Power	X		12->	46531160	**KCR12005**	SI ABS
0.9 - 0.9 NaTURAL Power		X	12->	46512973	**KMR12001**	SI ABS
0.9 4x4	X	X	12->	46531160	**KCR12005**	SI ABS
1.1 - 1.2	X		04->	46531160	**KCR12005**	SI ABS
1.1 - 1.2	X		04->	46423870	**KCR12008**	
1.1 - 1.2 - 1.3 D Multijet		X	04->	46512973	**KMR12001**	SI ABS
1.1 - 1.2 - 1.3 D Multijet		X	04->	46453887	**KMR12102**	
1.2 4x4		X	04->	46531160	**KCR12005**	SI ABS
1.2 4x4 - 1.3 D Multijet	X		04->	1587565	**KCR12001**	SI ABS
1.2 Bipower		X	04-nov	46512973	**KMR12001**	SI ABS
1.2 Bipower	X		04-nov	46531160	**KCR12005**	SI ABS
1.2 Bipower		X	04-nov	46453887	**KMR12102**	
1.2 Bipower	X		04-nov	46423870	**KCR12008**	
1.2 LPG	X		09->	46531160	**KCR12005**	SI ABS
1.2 LPG		X	09->	46453887	**KMR12102**	
1.2 LPG	X		09->	46423870	**KCR12008**	
1.2 LPG - 1.4 Natural Power		X	09->	46512973	**KMR12001**	SI ABS
1.2 Natural Power		X	07-nov	46512973	**KMR12001**	SI ABS
1.2 Natural Power	X		07-set	1587565	**KCR12001**	SI ABS
1.3 D Multijet 4x4	X		04-dic	1587565	**KCR12001**	SI ABS
1.3 D Multijet 4x4		X	04->	46531160	**KCR12005**	SI ABS
1.4 Natural Power	X		09->	1587565	**KCR12001**	SI ABS
1000 - 750	X		86-92	5890994	**KMR12201**	
1000 - 750		x	86-92	4399856	**KMR12004**	
1000 i.e.	X		92-04	5890994	**KMR12201**	
1000 i.e.		x	92-04	4399856	**KMR12004**	

follow FIAT

MODELLO MODEL	ASS.ANT. FRONT AXLE	ASS.POS. REAR AXLE	ANNO YEAR	RIF ORIGINALE ORIGINAL REF	RIF CORAM CORAM REF	NOTE NOTES
PANDA/PANDA CLASSIC						
1.1		X	03->	46512973	**KMR12001**	SI ABS
1.1	X		03->	46531160	**KCR12005**	SI ABS
1.1 - 1.2		X	03->	46453887	**KMR12102**	
1.1 - 1.2	X		03->	46423870	**KCR12008**	
1.2	X		mar-13	46531160	**KCR12005**	SI ABS
1.2 - 1.3 D Multijet		X	mar-13	46512973	**KMR12001**	SI ABS
1.2 4x4	X		apr-13	1587565	**KCR12001**	SI ABS
1.2 4x4		X	apr-13	46531160	**KCR12005**	SI ABS
1.2 LPG		X	set-13	46512973	**KMR12001**	SI ABS
1.2 LPG	X		set-13	46531160	**KCR12005**	SI ABS
1.2 LPG		X	set-13	46453887	**KMR12102**	
1.2 LPG	X		set-13	46423870	**KCR12008**	
1.2 Natural Power	X		07-nov	1587565	**KCR12001**	SI ABS
1.2 Natural Power		X	07-nov	46512973	**KMR12001**	SI ABS
1.3 D Multijet	X		mar-13	1587565	**KCR12001**	SI ABS
1.3 D Multijet		X	mar-13	46453887	**KMR12102**	
1.3 D Multijet 4x4	X		04->	1587565	**KCR12001**	SI ABS
1.3 D Multijet 4x4		X	04->	46531160	**KCR12005**	SI ABS
1.3 JTD Multijet 4x4	X		ott-13	1587565	**KCR12001**	SI ABS
1.3 JTD Multijet 4x4		X	ott-13	46531160	**KCR12005**	SI ABS
1.4	X		06->	1587565	**KCR12001**	SI ABS
1.4		X	06->	46512973	**KMR12001**	SI ABS
1.4		X	06->	46453887	**KMR12102**	
1.4 Natural Power	X		ott-13	1587565	**KCR12001**	SI ABS
1.4 Natural Power		X	ott-13	46512973	**KMR12001**	SI ABS
PANORAMA						
1.9 D - 2.5 D 4x4 - 2.5 TD	X		87-94	4330647	**KCR12007**	
1.9 TD	X		89-94	4330647	**KCR12007**	
2.0 - 2.5 D - 2.5 TD 4x4	X		86-94	4330647	**KCR12007**	
2.0 4x4	X		90-94	4330647	**KCR12007**	

follow FIAT

MODELLO MODEL	ASS.ANT. FRONT AXLE	ASS.POS. REAR AXLE	ANNO YEAR	RIF ORIGINALE ORIGINAL REF	RIF CORAM CORAM REF	NOTE NOTES
PUNTO						
0.9		X	13->	51787397	**KMR12002**	SI ABS
0.9 BifueL - 0.9 Twinair Turbo - 1.2 - 1.3 D Multijet		X	12->	51787397	**KMR12002**	SI ABS
1.2 16V	X		97-99	46423871	**KCR12006**	
1.2 16V		X	97-99	46453887	**KMR12102**	
1.2 16V 80	X		99-06	46527732	**KCR12003**	SI ABS
1.2 16V 80		X	99-06	46512973	**KMR12001**	SI ABS
1.2 16V 80	X		99-06	46423871	**KCR12006**	
1.2 16V 80		X	99-06	46453887	**KMR12102**	
1.2 60	X		99-10	46527732	**KCR12003**	SI ABS
1.2 60		X	99-10	46512973	**KMR12001**	SI ABS
1.2 60	X		99-10	46423871	**KCR12006**	
1.2 60		X	99-10	46453887	**KMR12102**	
1.2 Bifuel	X		07-dic	46527732	**KCR12003**	SI ABS
1.2 Bifuel		X	07-dic	46512973	**KMR12001**	SI ABS
1.2 Bifuel		X	07-dic	46453887	**KMR12102**	
1.2 Bipower	X		01-mar	46527732	**KCR12003**	SI ABS
1.2 Bipower		X	01-mar	46512973	**KMR12001**	SI ABS
1.2 Bipower	X		01-mar	46423871	**KCR12006**	
1.2 Bipower		X	01-mar	46453887	**KMR12102**	
1.2 Natural Power - 1.3 JTD 16V - 1.4		X	03-dic	46512973	**KMR12001**	SI ABS
1.2 Natural Power - 1.3 JTD 16V - 1.4		X	03-dic	46453887	**KMR12102**	
1.2 Natural Power - 1.4	X		03-dic	46527732	**KCR12003**	SI ABS
1.2 Natural Power - 1.4	X		03-dic	46423871	**KCR12006**	
1.3 D Multijet - 1.4 Turbo Multi Air	X		12->	1587565	**KCR12001**	SI ABS
1.3 JTD	X		03-dic	1587565	**KCR12001**	SI ABS
1.4 - 1.4 Bifuel - 1.4 Multi Air - 1.4 Natural Power		X	12->	51787397	**KMR12002**	SI ABS
1.4 GT Turbo		X	93-99	46453887	**KMR12102**	
1.4 GT Turbo	X		93-99	46423869	**KCR12009**	
1.4 Turbo Multi Air		X	12->	51787397	**KMR12002**	SI ABS
1.6 - 1.7 D	X		94-97	46423871	**KCR12006**	
1.6 - 1.7 D - 1.7 TD		X	94-97	46453887	**KMR12102**	
1.7 TD	X		96-99	46423871	**KCR12006**	
1.7 TD	X		94-99	46423869	**KCR12009**	
1.8 130 HGT - 1.9 DS 60 - 1.9 JTD 80		X	99-12	46512973	**KMR12001**	SI ABS
1.8 130 HGT - 1.9 DS 60 - 1.9 JTD 80		X	99-12	46453887	**KMR12102**	
1.8 130 HGT - 1.9 JTD 80	X		99-12	1587565	**KCR12001**	SI ABS
1.9 DS 60	X		99-12	46527732	**KCR12003**	SI ABS
1.9 DS 60	X		99-12	46423871	**KCR12006**	
1.9 JTD	X		01-dic	1587565	**KCR12001**	SI ABS
1.9 JTD		X	01-dic	46512973	**KMR12001**	SI ABS
1.9 JTD		X	01-dic	46453887	**KMR12102**	
1.9 JTD	X		01-dic	46423869	**KCR12009**	
1.9 JTD 80	X		99-12	46423869	**KCR12009**	
55 1.1 - 60 1.2 - 75 1.2		X	93-99	46453887	**KMR12102**	

follow FIAT

MODELLO MODEL	ASS.ANT. FRONT AXLE	ASS.POS. REAR AXLE	ANNO YEAR	RIF ORIGINALE ORIGINAL REF	RIF CORAM CORAM REF	NOTE NOTES
PUNTO Cabriolet						
60 1.2	X		94-00	46423871	**KCR12006**	
60 1.2	X		94-00	46453887	**KMR12102**	
85 16V 1.2	X		97-00	46423871	**KCR12006**	
85 16V 1.2	X		97-00	46453887	**KMR12102**	
90 1.6	X		94-97	46423871	**KCR12006**	
90 1.6	X		94-97	46453887	**KMR12102**	
PUNTO EVO						
1.2		X	09-dic	51787397	**KMR12002**	SI ABS
1.3 D Multijet - 1.4 - 1.4 16V - 1.4 LPG		X	09-dic	51787397	**KMR12002**	SI ABS
1.3 D Multijet - 1.4 16V - 1.6 D Multijet	X		08-dic	1587565	**KCR12001**	SI ABS
1.4 Natural Power - 1.6 D Multijet		X	09-dic	51787397	**KMR12002**	SI ABS
PUNTO EVO Van						
1.3 D Multijet	X		09-dic	1587565	**KCR12001**	SI ABS
1.3 D Multijet - 1.4		X	09-dic	51787397	**KMR12002**	SI ABS
1.3 JTD	X		03-mag	1587565	**KCR12001**	SI ABS
1.9 JTD	X		00-09	1587565	**KCR12001**	SI ABS
PUNTO Van						
1.1 - 1.7 D - 1.7 TD		X	96-00	46453887	**KMR12102**	
1.2 60 - 1.9 D 60	X		00-06	46527732	**KCR12003**	SI ABS
1.2 60 - 1.9 D 60	X		00-09	46423871	**KCR12006**	
1.2 60 - 1.9 D 60 - 1.9 JTD		X	00-09	46512973	**KMR12001**	SI ABS
1.2 60 - 1.9 D 60 - 1.9 JTD		X	00-09	46453887	**KMR12102**	
1.3 D Multijet - 1.4 Natural Power		X	09->	51787397	**KMR12002**	SI ABS
1.3 JTD		X	03-mag	46512973	**KMR12001**	SI ABS
1.3 JTD		X	03-mag	46453887	**KMR12102**	
1.4 - 1.4 LPG		X	12->	51787397	**KMR12002**	SI ABS
1.7 D	X		96-00	46423871	**KCR12006**	
1.7 TD	X		96-00	46423869	**KCR12009**	
1.9 JTD	X		00-09	46423869	**KCR12009**	
QUBO						
1.3 D Multijet	X		08->	1587565	**KCR12001**	SI ABS
1.3 D Multijet - 1.4		X	08->	46512973	**KMR12001**	SI ABS
1.4 Natural Power		X	09->	46512973	**KMR12001**	SI ABS

follow FIAT

MODELLO MODEL	ASS.ANT. FRONT AXLE	ASS.POS. REAR AXLE	ANNO YEAR	RIF ORIGINALE ORIGINAL REF	RIF CORAM CORAM REF	NOTE NOTES
REGATA						
100 Super 1.6 - 85 1.6		X	83-90	4399856	**KMR12004**	
60 Diesel 1.7 - 70 1.3 - 75 1.5		X	83-89	4399856	**KMR12004**	
65 Diesel 1.9		X	84-89	4399856	**KMR12004**	
80 Turbo Diesel 1.9		X	86-89	4399856	**KMR12004**	
85 1.5		X	85-87	4399856	**KMR12004**	
85 Super 1.5		X	83-85	4399856	**KMR12004**	
90 i.e. 1.6		X	87-89	4399856	**KMR12004**	
RITMO Cabriolet						
1.3		X	79-83	4399856	**KMR12004**	
100 1.6 - 50 1.3		X	85-87	4399856	**KMR12004**	
85 1.5		X	80-89	4399856	**KMR12004**	
SEDICI						
1.6 16V - 1.6 16V 4x4 - 2.0 D Multijet - 2.0 D Multijet 4x4	X		giu-14	71742699	**KCR24002**	SI ABS
1.9 D Multijet - 1.9 D Multijet 4x4	X		06-nov	71742699	**KCR24002**	SI ABS
SEICENTO/ 600						
0.9	X		97-08	46531160	**KCR12005**	SI ABS
0.9		X	97-08	4399856	**KMR12004**	
0.9	X		97-08	46423870	**KCR12008**	
1.1	X		98-10	46531160	**KCR12005**	SI ABS
1.1		X	98-10	4399856	**KMR12004**	
1.1	X		98-10	46423870	**KCR12008**	
Elettra	X		99-05	46531160	**KCR12005**	SI ABS
Elettra		X	99-05	4399856	**KMR12004**	
Elettra	X		99-05	46423870	**KCR12008**	
Elettrica	X		98-04	46531160	**KCR12005**	SI ABS
Elettrica		X	98-04	4399856	**KMR12004**	
Elettrica	X		98-04	46423870	**KCR12008**	
SEICENTO/ 600 Van						
0.9 - 1.1	X		98-10	46531160	**KCR12005**	SI ABS
0.9 - 1.1		X	98-10	4399856	**KMR12004**	
0.9 - 1.1	X		98-10	46423870	**KCR12008**	

follow FIAT

MODELLO MODEL	ASS.ANT. FRONT AXLE	ASS.POS. REAR AXLE	ANNO YEAR	RIF ORIGINALE ORIGINAL REF	RIF CORAM CORAM REF	NOTE NOTES
SIENA						
1.2		X	98-02	46512973	**KMR12001**	SI ABS
1.2		X	98-02	46453887	**KMR12102**	
1.4 - 1.4 Cat		X	96-09	46512973	**KMR12001**	SI ABS
1.4 - 1.4 Cat		X	96-09	46453887	**KMR12102**	
1.6 16V		X	98-09	46512973	**KMR12001**	SI ABS
1.6 16V		X	98-09	46453887	**KMR12102**	
STILO						
1.2 16V	X		02-giu	46527732	**KCR12003**	SI ABS
1.2 16V	X		02-giu	46836196	**KCR12004**	SI ABS
1.2 16V		X	02-giu	46512973	**KMR12001**	SI ABS
1.4 16V	X		03-giu	46836196	**KCR12004**	SI ABS
1.4 16V		X	03-giu	46512973	**KMR12001**	SI ABS
1.6 16V - 1.8 16V - 1.9 JTD	X		01-giu	46836196	**KCR12004**	SI ABS
1.6 16V - 1.9 JTD		X	01-giu	46512973	**KMR12001**	SI ABS
1.8 16V - 2.4 20V		X	01-lug	46512973	**KMR12001**	SI ABS
1.9 D Multijet	X		05-giu	46836196	**KCR12004**	SI ABS
1.9 D Multijet		X	05-giu	46512973	**KMR12001**	SI ABS
1.9 D Multijet	X		05-giu	46836200	**KCR12010**	SI ABS
1.9 JTD	X		01-giu	46836200	**KCR12010**	SI ABS
2.4 20V	X		01-lug	46836200	**KCR12010**	SI ABS
STILO Multi Wagon						
1.4 16V	X		04-ago	46836196	**KCR12004**	SI ABS
1.4 16V		X	04-ago	46554134	**KMR12003**	SI ABS
1.6 16V - 1.8 16V - 1.9 JTD	X		03-ago	46836196	**KCR12004**	SI ABS
1.6 16V - 1.8 16V - 1.9 JTD		X	03-ago	46554134	**KMR12003**	SI ABS
1.9 D Multijet	X		05-ago	46836196	**KCR12004**	SI ABS
1.9 D Multijet		X	05-ago	46554134	**KMR12003**	SI ABS
1.9 D Multijet	X		05-ago	46836200	**KCR12010**	SI ABS
1.9 JTD	X		03-ago	46836200	**KCR12010**	SI ABS
STRADA Pick-Up						
1.3 D Multijet	X		06->	1587565	**KCR12001**	SI ABS
1.3 D Multijet		X	10->	46554134	**KMR12003**	SI ABS
1.3 D Multijet	X		06->	46423869	**KCR12009**	
1.9 JTD	X		03->	1587565	**KCR12001**	SI ABS
1.9 JTD	X		03->	46423869	**KCR12009**	

follow FIAT

MODELLO MODEL	ASS.ANT. FRONT AXLE	ASS.POS. REAR AXLE	ANNO YEAR	RIF ORIGINALE ORIGINAL REF	RIF CORAM CORAM REF	NOTE NOTES
TALENTO Autobus						
1.9 D - 2.0	X		89-94	4330647	**KCR12007**	
TALENTO Furgonato						
1.9 D - 2.0	X		89-94	4330647	**KCR12007**	
TALENTO Pianale piatto						
1.9 D - 2.0	X		89-94	4330647	**KCR12007**	
TEMPRA						
1.4 i.e. - 1.9 D		X	91-96	46453887	**KMR12102**	
1.6		X	90-94	46453887	**KMR12102**	
1.6 i.e. - 1.8 i.e. - 1.9 TD - 2.0 i.e.		X	90-96	46453887	**KMR12102**	
1.8 i.e. - 1.9 TD - 2.0 i.e.	X		90-96	46423869	**KCR12009**	
2.0		X	90-93	46453887	**KMR12102**	
2.0	X		90-93	46423869	**KCR12009**	
TEMPRA SW						
1.4 i.e. - 1.9 D		X	91-96	46453887	**KMR12102**	
1.6		X	90-93	46453887	**KMR12102**	
1.6 i.e. - 1.8 i.e.		X	90-96	46453887	**KMR12102**	
1.8 i.e.	X		90-96	46423869	**KCR12009**	
1.9 TD - 2.0 i.e.		X	91-95	46453887	**KMR12102**	
1.9 TD - 2.0 i.e.	X		91-95	46423869	**KCR12009**	
2.0 i.e. 4x4	X		92-95	46423869	**KCR12009**	

follow FIAT

MODELLO MODEL	ASS.ANT. FRONT AXLE	ASS.POS. REAR AXLE	ANNO YEAR	RIF ORIGINALE ORIGINAL REF	RIF CORAM CORAM REF	NOTE NOTES
TIPO						
1.1	X		88-91	46423870	**KCR12008**	
1.1 - 1.6		X	88-91	46453887	**KMR12102**	
1.4		X	87-89	46453887	**KMR12102**	
1.4	X		87-89	46423870	**KCR12008**	
1.4 i.e.		X	89-95	46453887	**KMR12102**	
1.4 i.e.	X		89-95	46423870	**KCR12008**	
1.6 i.e.		X	88-95	46453887	**KMR12102**	
1.7 D		X	88-94	46453887	**KMR12102**	
1.8 i.e. - 1.9 TD - 2.0 i.e.		X	90-95	46453887	**KMR12102**	
1.8 i.e. - 1.9 TD - 2.0 i.e.	X		90-95	46423869	**KCR12009**	
1.8 i.e. 16V Sport		X	89-92	46453887	**KMR12102**	
1.8 i.e. 16V Sport	X		89-92	46423869	**KCR12009**	
1.9 D - 2.0 16V		X	91-95	46453887	**KMR12102**	
2.0 16V	X		91-95	46423869	**KCR12009**	
2.0 i.e. 16V Sport		X	93-95	46453887	**KMR12102**	
2.0 i.e. 16V Sport	X		93-95	46423869	**KCR12009**	
TIPO 2 Volumi						
1.3 D - 1.4 - 1.4 LPG - 1.6 - 1.6 D	X		16->	46836196	**KCR12004**	SI ABS
1.3 D - 1.4 - 1.6 - 1.6 D		X	16-20	51754196	**KMR12009**	SI ABS
TIPO 3 Volumi						
1.3 D - 1.4 - 1.6 - 1.6 D	X		15->	46836196	**KCR12004**	SI ABS
1.3 D - 1.4 - 1.6 - 1.6 D		X	15-20	51754196	**KMR12009**	SI ABS
1.4 LPG	X		16->	46836196	**KCR12004**	SI ABS
TIPO Station Wagon						
1.3 D - 1.4 - 1.4 LPG - 1.6 - 1.6 D	X		16->	46836196	**KCR12004**	SI ABS
1.3 D - 1.4 - 1.6 - 1.6 D		X	16-20	51754196	**KMR12009**	SI ABS

follow FIAT

MODELLO MODEL	ASS.ANT. FRONT AXLE	ASS.POS. REAR AXLE	ANNO YEAR	RIF ORIGINALE ORIGINAL REF	RIF CORAM CORAM REF	NOTE NOTES
UNO						
1.1	X		86-06	5937306	**KCR12012**	
1.3 Super Diesel	X		83-92	5937306	**KCR12012**	
45 0.9	X		83-92	5937306	**KCR12012**	
45 1.0	X		86-93	5937306	**KCR12012**	
45 i.e. 1.0	X		84-95	5937306	**KCR12012**	
50 1.1	X		86-93	5937306	**KCR12012**	
50 i.e. 1.1	X		92-93	5937306	**KCR12012**	
55 1.1 - 70 1.3	X		83-89	5937306	**KCR12012**	
60 1.1	X		85-92	5937306	**KCR12012**	
70 i.e 1.5	X		85-93	5937306	**KCR12012**	
70 i.e. 1.4	X		89-96	5937306	**KCR12012**	
70 S 1.4	X		88-06	5937306	**KCR12012**	
X 1/9						
1.3	X		73-79	5937306	**KCR12012**	
1.3		X	73-79	5937306	**KCR12012**	

FORD

MODELLO MODEL	ASS.ANT. FRONT AXLE	ASS.POS. REAR AXLE	ANNO YEAR	RIF ORIGINALE ORIGINAL REF	RIF CORAM CORAM REF	NOTE NOTES
B-MAX						
1.0 EcoBoost - 1.4 - 1.5 TDCi - 1.6 TDCi - 1.6 Ti	X		12->	1582282	**KCR13008**	SI ABS
1.4 LPG	X		13->	1582282	**KCR13008**	SI ABS
CAPRI						
3000	X		72-74	1492160	**KCR528**	
CAPRI II						
3.0	X		74-81	1492160	**KCR528**	
CAPRI III						
3.0	X		74-81	1492160	**KCR528**	

follow FORD

MODELLO MODEL	ASS.ANT. FRONT AXLE	ASS.POS. REAR AXLE	ANNO YEAR	RIF ORIGINALE ORIGINAL REF	RIF CORAM CORAM REF	NOTE NOTES
C-MAX						
1.6 - 1.6 TDCi - 1.8 - 1.8 Flexifuel - 1.8 TDCi - 2.0 - 2.0 TDCi		X	07-ott	1471852	**KMR13001**	
1.6 - 1.6 TDCi - 1.8 - 1.8 Flexifuel - 1.8 TDCi - 2.0 - 2.0 TDCi	X		07-ott	1223640	**KMR13003**	SI ABS
2.0 CNG		X	09-ott	1471852	**KMR13001**	
2.0 CNG	X		09-ott	1223640	**KMR13003**	SI ABS
2.0 LPG		X	08-ott	1471852	**KMR13001**	
2.0 LPG	X		08-ott	1223640	**KMR13003**	SI ABS
CONSUL						
1700 - 2000 - 2300	X		72-75	1492160	**KCR528**	
3000	X		72-74	1492160	**KCR528**	
CONSUL Coupè						
1700 - 2000 - 2300	X		72-75	1492160	**KCR528**	
3000	X		72-74	1492160	**KCR528**	
CONSUL Turnier						
1700 - 2000 - 2300 - 3000	X		72-75	1492160	**KCR528**	
ECOSPORT						
1.0 EcoBoost - 1.5 TDCi - 1.5 Ti	X		13->	1582282	**KCR13008**	SI ABS
1.5 TDCi EcoBlue 4x4		X	17->	1582282	**KCR13008**	SI ABS
ESCORT III						
1.1 - 1.3 - 1.6	X		80-85	1492160	**KCR528**	
1.3 - 1.6	X		80-85	1591389	**KCR687**	
1.6 D - 1.6 RS Turbo	X		84-85	1492160	**KCR528**	
1.6 D - 1.6 RS Turbo	X		84-85	1591389	**KCR687**	
1.6 i	X		85-85	1492160	**KCR528**	
1.6 i	X		85-85	1591389	**KCR687**	
1.6 XR3i - RS 1600i	X		82-85	1492160	**KCR528**	
1.6 XR3i - RS 1600i	X		82-85	1591389	**KCR687**	
ESCORT III Cabriolet						
1.3 - 1.6 - 1.6 i	X		83-85	1492160	**KCR528**	
1.3 - 1.6 - 1.6 i	X		83-85	1591389	**KCR687**	

follow FORD

MODELLO MODEL	ASS.ANT. FRONT AXLE	ASS.POS. REAR AXLE	ANNO YEAR	RIF ORIGINALE ORIGINAL REF	RIF CORAM CORAM REF	NOTE NOTES
ESCORT III Express						
1.1 - 1.3 - 1.6	X		81-86	1591389	**KCR687**	
1.6 D	X		84-86	1591389	**KCR687**	
ESCORT III Turnier						
1.1 - 1.6	X		80-85	1492160	**KCR528**	
1.1 - 1.6	X		80-85	1591389	**KCR687**	
1.3	X		81-85	1492160	**KCR528**	
1.3	X		81-85	1591389	**KCR687**	
1.6 D	X		84-85	1492160	**KCR528**	
1.6 D	X		84-85	1591389	**KCR687**	
ESCORT IV						
1.1 - 1.4	X		85-90	1492160	**KCR528**	
1.3 - 1.6 Turbo RS - 1.6 i	X		86-90	1492160	**KCR528**	
1.4	X		85-90	1591389	**KCR687**	
1.6 - 1.8 D	X		89-90	1492160	**KCR528**	
1.6 - 1.8 D	X		89-90	1591389	**KCR687**	
1.6 D - 1.6 Turbo RS - 1.6 i	X		86-90	1591389	**KCR687**	
1.6 D - 1.6 XR3i	X		86-89	1492160	**KCR528**	
1.6 XR3i	X		86-89	1591389	**KCR687**	
ESCORT IV Cabriolet						
1.4 - 1.6 XR3i - 1.6i	X		86-90	1492160	**KCR528**	
1.4 - 1.6 XR3i - 1.6i	X		86-90	1591389	**KCR687**	
ESCORT IV Express						
1.1 - 1.3 - 1.4 - 1.6 D	X		86-90	1591389	**KCR687**	
1.8 D	X		84-86	1591389	**KCR687**	

follow FORD

MODELLO MODEL	ASS.ANT. FRONT AXLE	ASS.POS. REAR AXLE	ANNO YEAR	RIF ORIGINALE ORIGINAL REF	RIF CORAM CORAM REF	NOTE NOTES
ESCORT IV Turnier						
1.1 - 1.4	X		85-90	1492160	**KCR528**	
1.1 - 1.4	X		85-90	1591389	**KCR687**	
1.3 - 1.4 - 1.6 16V - 1.8 16V - 1.8 D - 1.8 TD	X		95-99	1019561	**KCR1333**	
1.3 - 1.6 D - 1.6i	X		86-90	1492160	**KCR528**	
1.3 - 1.6i	X		86-90	1591389	**KCR687**	
1.6 D	X		86-89	1591389	**KCR687**	
1.6 i 16V	X		95-95	1019561	**KCR1333**	
1.8 D	X		89-90	1492160	**KCR528**	
1.8 D	X		89-90	1591389	**KCR687**	
1.8 TD	X		89-95	1019561	**KCR1333**	
ESCORT V						
1.3 - 1.4 - 1.8 D	X		90-95	1019561	**KCR1333**	
1.6	X		90-93	1019561	**KCR1333**	
1.8 16V XR3i	X		92-95	1019561	**KCR1333**	
RS 2000	X		91-95	1019561	**KCR1333**	
ESCORT V Cabriolet						
1.4	X		90-94	1019561	**KCR1333**	
1.6	X		90-93	1019561	**KCR1333**	
1.8 16V XR3i	X		92-95	1019561	**KCR1333**	
ESCORT V Tre volumi						
1.3 - 1.4 - 1.6 i 16V - 1.8 D - 1.8TD - 1.8 i 16V	X		93-95	1019561	**KCR1333**	
ESCORT V Turnier						
1.3	X		91-95	1019561	**KCR1333**	
1.4 - 1.8 D	X		90-95	1019561	**KCR1333**	
1.6	X		90-92	1019561	**KCR1333**	
1.8 16V	X		92-95	1019561	**KCR1333**	
FIESTA Cassone						
1.4	X		86-89	1591389	**KCR687**	
1.6 D	X		83-89	1591389	**KCR687**	
FIESTA I						
1.3	X		77-83	1591389	**KCR687**	
1.6 XR2	X		81-83	1591389	**KCR687**	

follow FORD

MODELLO MODEL	ASS.ANT. FRONT AXLE	ASS.POS. REAR AXLE	ANNO YEAR	RIF ORIGINALE ORIGINAL REF	RIF CORAM CORAM REF	NOTE NOTES
FIESTA II						
1.3 - 1.4	X		83-87	1591389	**KCR687**	
1.6 D - 1.6 XR2	X		83-87	1591389	**KCR687**	
FIESTA III						
1.1 - 1.3 - 1.4 - 1.8 D	X		89-95	1019561	**KCR1333**	
1.3 - 1.4 - 1.8 D	X		90-93	1019561	**KCR1333**	
1.3 Cat	X		91-97	1019561	**KCR1333**	
1.6 - 1.6 i	X		90-92	1019561	**KCR1333**	
1.6 - 1.6XR3i	X		89-94	1019561	**KCR1333**	
1.6 i 16V	X		94-95	1019561	**KCR1333**	
1.6 i 16V - 1.8 TD - 1.8 i 16V	X		92-93	1019561	**KCR1333**	
1.6 Turbo	X		90-92	1019561	**KCR1333**	
1.8 16V - 1.8 XR3i 16V	X		92-95	1019561	**KCR1333**	
1.8 TD	X		93-95	1019561	**KCR1333**	
FIESTA V						
1.25 16V		X	02-ago	1085565	**KCR13001**	
1.25 16V	X		02-ago	112547	**KCR13002**	SI ABS
1.25 16V		X	02-set	1201568	**KCR13003**	
1.25 16V	X		02-set	2S6W-1215-AA	**KCR13004**	
1.3 - 1.4 16V - 1.4 TDCi - 1.6 16V		X	01-ago	1085565	**KCR13001**	
1.3 - 1.4 16V - 1.4 TDCi - 1.6 16V	X		01-ago	112547	**KCR13002**	SI ABS
1.3 - 1.4 16V - 1.4 TDCi - 1.6 16V		X	01-ago	1201568	**KCR13003**	
1.3 - 1.4 16V - 1.4 TDCi - 1.6 16V	X		01-ago	2S6W-1215-AA	**KCR13004**	
1.6 TDCi		X	04-ago	1085565	**KCR13001**	
1.6 TDCi	X		04-ago	112547	**KCR13002**	SI ABS
1.6 TDCi		X	04-ago	1201568	**KCR13003**	
1.6 TDCi	X		04-ago	2S6W-1215-AA	**KCR13004**	
ST150		X	05-ago	1085565	**KCR13001**	
ST150	X		05-ago	112547	**KCR13002**	SI ABS
ST150		X	05-ago	1201568	**KCR13003**	
ST150	X		05-ago	2S6W-1215-AA	**KCR13004**	

follow FORD

MODELLO MODEL	ASS.ANT. FRONT AXLE	ASS.POS. REAR AXLE	ANNO YEAR	RIF ORIGINALE ORIGINAL REF	RIF CORAM CORAM REF	NOTE NOTES
FIESTA V Van						
1.3		X	03-mag	1085565	**KCR13001**	
1.3	X		03-mag	112547	**KCR13002**	SI ABS
1.3		X	03-mag	1201568	**KCR13003**	
1.3	X		03-mag	2S6W-1215-AA	**KCR13004**	
1.4 TDCI		X	03-ott	1085565	**KCR13001**	
1.4 TDCI	X		03-ott	112547	**KCR13002**	SI ABS
1.4 TDCI		X	03-ott	1201568	**KCR13003**	
1.4 TDCI	X		03-ott	2S6W-1215-AA	**KCR13004**	
FIESTA VI						
1.0 - 1.0 EcoBoost - 1.5 TDCi	X	X	12->	1582282	**KCR13008**	SI ABS
1.0 - 1.0 EcoBoost - 1.5 TDCi		X	12->	1516504	**KMR13002**	SI ABS
1.0 Sport	X	X	14->	1582282	**KCR13008**	SI ABS
1.0 Sport		X	14->	1516504	**KMR13002**	SI ABS
1.25 - 1.4 - 1.6 TDCi - 1.6 Ti	X	X	08->	1582282	**KCR13008**	SI ABS
1.25 - 1.4 - 1.6 TDCi - 1.6 Ti		X	08->	1516504	**KMR13002**	SI ABS
1.4 LPG - 1.4 TDCi	X	X	09->	1582282	**KCR13008**	SI ABS
1.4 LPG - 1.4 TDCi		X	09->	1516504	**KMR13002**	SI ABS
1.6		X	15->	1516504	**KMR13002**	SI ABS
1.6 ST	X	X	13->	1582282	**KCR13008**	SI ABS
1.6 ST		X	13->	1516504	**KMR13002**	SI ABS
1.6 ST200	X	X	16->	1582282	**KCR13008**	SI ABS
1.6 ST200		X	16->	1516504	**KMR13002**	SI ABS
FIESTA VI Van						
1.0 - 1.5 TDCi		X	12->	1516504	**KMR13002**	SI ABS
1.25 - 1.4 TDCi - 1.6 TDCi	X	X	09->	1582282	**KCR13008**	SI ABS
1.25 - 1.4 TDCi - 1.6 TDCi		X	09->	1516504	**KMR13002**	SI ABS
1.5 TDCi	X	X	12->	1582282	**KCR13008**	SI ABS
FIESTA VII						
1.0 EcoBoost - 1.1 - 1.5 TDCi	X		17->	1582282	**KCR13008**	SI ABS

follow FORD

MODELLO MODEL	ASS.ANT. FRONT AXLE	ASS.POS. REAR AXLE	ANNO YEAR	RIF ORIGINALE ORIGINAL REF	RIF CORAM CORAM REF	NOTE NOTES
FOCUS						
1.4 16V - 1.6 16V - 1.8 16V - 1.8 Turbo DI/TDDi - 2.0 16V		X	98-04	1085565	**KCR13001**	
1.4 16V - 1.6 16V - 1.8 16V - 1.8 Turbo DI/TDDi - 2.0 16V		X	98-04	1201568	**KCR13003**	
1.4 16V - 1.6 16V - 1.8 16V - 1.8 Turbo DI/TDDi - 2.0 16V	X		98-04	112547	**KCR13002**	SI ABS
1.4 16V - 1.6 16V - 1.8 16V - 1.8 Turbo DI/TDDi - 2.0 16V	X		98-04	2S6W-1215-AA	**KCR13004**	
1.8 DI / TDDi		X	99-04	1085565	**KCR13001**	
1.8 DI / TDDi		X	99-04	1201568	**KCR13003**	
1.8 DI / TDDi	X		99-04	112547	**KCR13002**	SI ABS
1.8 DI / TDDi	X		99-04	2S6W-1215-AA	**KCR13004**	
1.8 TDCi		X	01-apr	1085565	**KCR13001**	
1.8 TDCi		X	01-apr	1201568	**KCR13003**	
1.8 TDCi	X		01-apr	112547	**KCR13002**	SI ABS
1.8 TDCi	X		01-apr	2S6W-1215-AA	**KCR13004**	
ST170		X	02-apr	1085565	**KCR13001**	
ST170		X	02-apr	1201568	**KCR13003**	
ST170	X		02-apr	112547	**KCR13002**	SI ABS
ST170	X		02-apr	2S6W-1215-AA	**KCR13004**	
FOCUS C-MAX						
1.6 - 1.6 TDCi - 1.8 - 2.0 TDCi		X	03-lug	1471852	**KMR13001**	
1.6 - 1.6 TDCi - 1.8 - 2.0 TDCi	X		03-lug	1223640	**KMR13003**	SI ABS
1.6 Ti - 2.0		X	04-lug	1471852	**KMR13001**	
1.6 Ti - 2.0	X		04-lug	1223640	**KMR13003**	SI ABS
1.8 Flexifuel		X	06-lug	1471852	**KMR13001**	
1.8 Flexifuel	X		06-lug	1223640	**KMR13003**	SI ABS
1.8 TDCi		X	05-lug	1471852	**KMR13001**	
1.8 TDCi	X		05-lug	1223640	**KMR13003**	SI ABS
FOCUS II						
1.4 - 1.6 - 1.6 TDCi - 1.6 Ti - 2.0 - 2.0 TDCi		X	04-dic	1471852	**KMR13001**	
1.4 - 1.6 - 1.6 TDCi - 1.6 Ti - 2.0 - 2.0 TDCi	X		04-dic	1223640	**KMR13003**	SI ABS
1.6 LPG - 2.0 CNG		X	09-nov	1471852	**KMR13001**	
1.6 LPG - 2.0 CNG	X		09-nov	1223640	**KMR13003**	SI ABS
1.8 - 1.8 Flexifuel		X	06-dic	1471852	**KMR13001**	
1.8 - 1.8 Flexifuel	X		06-dic	1223640	**KMR13003**	SI ABS
1.8 TDCi - 2.5 ST		X	05-dic	1471852	**KMR13001**	
1.8 TDCi - 2.5 ST	X		05-dic	1223640	**KMR13003**	SI ABS
2.0 LPG		X	08-nov	1471852	**KMR13001**	
2.0 LPG	X		08-nov	1223640	**KMR13003**	SI ABS

follow FORD

MODELLO MODEL	ASS.ANT. FRONT AXLE	ASS.POS. REAR AXLE	ANNO YEAR	RIF ORIGINALE ORIGINAL REF	RIF CORAM CORAM REF	NOTE NOTES
FOCUS II Cabriolet						
1.6 - 2.0 - 2.0 TDCi		X	06-ott	1471852	**KMR13001**	
1.6 - 2.0 - 2.0 TDCi	X		06-ott	1223640	**KMR13003**	SI ABS
FOCUS II Cassone						
1.6 TDCi - 1.6 Ti-VCT		X	05-nov	1471852	**KMR13001**	
1.6 TDCi - 1.6 Ti-VCT	X		05-nov	1223640	**KMR13003**	SI ABS
2.0 TDCi		X	09-nov	1471852	**KMR13001**	
2.0 TDCi	X		09-nov	1223640	**KMR13003**	SI ABS
FOCUS II Tre volumi						
1.4 - 1.6 - 1.6 TDCi - 1.6 Ti - 1.8 TDCi - 2.0 TDCi		X	05-dic	1471852	**KMR13001**	
1.4 - 1.6 - 1.6 TDCi - 1.6 Ti - 1.8 TDCi - 2.0 TDCi	X		05-dic	1223640	**KMR13003**	SI ABS
1.8		X	06-dic	1471852	**KMR13001**	
1.8	X		06-dic	1223640	**KMR13003**	SI ABS
1.8 Flexifuel		X	06-nov	1471852	**KMR13001**	
1.8 Flexifuel	X		06-nov	1223640	**KMR13003**	SI ABS
2.0		X	05-nov	1471852	**KMR13001**	
2.0	X		05-nov	1223640	**KMR13003**	SI ABS
FOCUS II Turnier						
1.4 - 1.6 TDCi - 1.6 Ti - 1.8 TDCi - 2.0 - 2.0 TDCi		X	04-dic	1471852	**KMR13001**	
1.4 - 1.6 TDCi - 1.6 Ti - 1.8 TDCi - 2.0 - 2.0 TDCi	X		04-dic	1223640	**KMR13003**	SI ABS
1.6		X	04-nov	1471852	**KMR13001**	
1.6	X		04-nov	1223640	**KMR13003**	SI ABS
1.6 LPG		X	09-dic	1471852	**KMR13001**	
1.6 LPG	X		09-dic	1223640	**KMR13003**	SI ABS
1.8 - 1.8 Flexifuel		X	06-dic	1471852	**KMR13001**	
1.8 - 1.8 Flexifuel	X		06-dic	1223640	**KMR13003**	SI ABS
2.0 LPG		X	08-nov	1471852	**KMR13001**	
2.0 LPG	X		08-nov	1223640	**KMR13003**	SI ABS
FOCUS Tre volumi						
1.4 16V - 1.6 16V - 1.8 16V - 1.8 Turbo DI/TDDi - 2.0 16V		X	99-04	1085565	**KCR13001**	
1.4 16V - 1.6 16V - 1.8 16V - 1.8 Turbo DI/TDDi - 2.0 16V		X	99-04	1201568	**KCR13003**	
1.4 16V - 1.6 16V - 1.8 16V - 1.8 Turbo DI/TDDi - 2.0 16V	X		99-04	112547	**KCR13002**	SI ABS
1.4 16V - 1.6 16V - 1.8 16V - 1.8 Turbo DI/TDDi - 2.0 16V	X		99-04	2S6W-1215-AA	**KCR13004**	
1.8 TDCi		X	01-apr	1085565	**KCR13001**	
1.8 TDCi		X	01-apr	1201568	**KCR13003**	
1.8 TDCi	X		01-apr	112547	**KCR13002**	SI ABS
1.8 TDCi	X		01-apr	2S6W-1215-AA	**KCR13004**	

follow FORD

MODELLO MODEL	ASS.ANT. FRONT AXLE	ASS.POS. REAR AXLE	ANNO YEAR	RIF ORIGINALE ORIGINAL REF	RIF CORAM CORAM REF	NOTE NOTES
FOCUS Turnier						
1.4 16V - 1.6 16V - 1.8 16V - 1.8 DI/TDDi		X	99-04	1085565	**KCR13001**	
1.4 16V - 1.6 16V - 1.8 16V - 1.8 DI/TDDi		X	99-04	1201568	**KCR13003**	
1.4 16V - 1.6 16V - 1.8 16V - 1.8 DI/TDDi	X		99-04	112547	**KCR13002**	SI ABS
1.4 16V - 1.6 16V - 1.8 16V - 1.8 DI/TDDi	X		99-04	2S6W-1215-AA	**KCR13004**	
1.8 TDCi		X	01-apr	1085565	**KCR13001**	
1.8 TDCi		X	01-apr	1201568	**KCR13003**	
1.8 TDCi	X		01-apr	112547	**KCR13002**	SI ABS
1.8 TDCi	X		01-apr	2S6W-1215-AA	**KCR13004**	
1.8 Turbo DI/TDDi - 2.0 16V		X	99-04	1085565	**KCR13001**	
1.8 Turbo DI/TDDi - 2.0 16V		X	99-04	1201568	**KCR13003**	
1.8 Turbo DI/TDDi - 2.0 16V	X		99-04	112547	**KCR13002**	SI ABS
1.8 Turbo DI/TDDi - 2.0 16V	X		99-04	2S6W-1215-AA	**KCR13004**	
ST170		X	02-apr	1085565	**KCR13001**	
ST170		X	02-apr	1201568	**KCR13003**	
ST170	X		02-apr	112547	**KCR13002**	SI ABS
ST170	X		02-apr	2S6W-1215-AA	**KCR13004**	
FUSION						
1.25 - 1.6 TDCi		X	04-dic	1085565	**KCR13001**	
1.25 - 1.6 TDCi		X	04-dic	1201568	**KCR13003**	
1.25 - 1.6 TDCi	X		04-dic	112547	**KCR13002**	SI ABS
1.25 - 1.6 TDCi	X		04-dic	2S6W-1215-AA	**KCR13004**	
1.4 - 1.4 TDCi		X	02-dic	1085565	**KCR13001**	
1.4 - 1.4 TDCi		X	02-dic	1201568	**KCR13003**	
1.4 - 1.4 TDCi	X		02-dic	112547	**KCR13002**	SI ABS
1.4 - 1.4 TDCi	X		02-dic	2S6W-1215-AA	**KCR13004**	
1.4 LPG		X	10-dic	1085565	**KCR13001**	
1.4 LPG		X	10-dic	1201568	**KCR13003**	
1.4 LPG	X		10-dic	112547	**KCR13002**	SI ABS
1.4 LPG	X		10-dic	2S6W-1215-AA	**KCR13004**	
1.6		X	02-ago	1085565	**KCR13001**	
1.6		X	02-ago	1201568	**KCR13003**	
1.6	X		02-ago	112547	**KCR13002**	SI ABS
1.6	X		02-ago	2S6W-1215-AA	**KCR13004**	
GALAXY						
1.9 TDI - 2.0 i		X	95-06	1001719	**KCR27201**	
2.3 16V		X	97-06	1001719	**KCR27201**	
2.8 i V6		X	95-00	1001719	**KCR27201**	
2.8 V6		X	00-06	1001719	**KCR27201**	

follow FORD

MODELLO MODEL	ASS.ANT. FRONT AXLE	ASS.POS. REAR AXLE	ANNO YEAR	RIF ORIGINALE ORIGINAL REF	RIF CORAM CORAM REF	NOTE NOTES
GRANADA						
1.7	X		72-82	1492160	**KCR528**	
1.9 D - 2.1 D	X		77-82	1492160	**KCR528**	
2.0	X		75-85	1492160	**KCR528**	
2.3	X		72-85	1492160	**KCR528**	
2.5 D	X		82-85	1492160	**KCR528**	
2.6 - 3.0	X		72-76	1492160	**KCR528**	
2.8 - 2.8 i	X		77-85	1492160	**KCR528**	
GRANADA Coupè						
1.7 - 2.0	X		72-75	1492160	**KCR528**	
2.3 - 2.6 - 3.0	X		72-76	1492160	**KCR528**	
GRANADA Turnier						
1.7	X		72-81	1492160	**KCR528**	
2.0	X		75-85	1492160	**KCR528**	
2.3	X		72-85	1492160	**KCR528**	
2.5 D	X		82-85	1492160	**KCR528**	
2.8 - 2.8 i	X		77-85	1492160	**KCR528**	
KA						
1.2	X		08->	1587548	**KCR12005**	SI ABS
1.2 - 1.3 TDCi		X	08->	1570756	**KMR12001**	SI ABS
1.3 TDCi	X		08->	1587565	**KCR12001**	SI ABS
KA+						
1.2 - 1.2 Ti-VCT	X		16->	1582282	**KCR13008**	SI ABS
KA+ III						
1.2 - 1.2 Ti-VCT		X	16->	1516504	**KMR13002**	SI ABS
1.5 TDCi		X	18->	1516504	**KMR13002**	SI ABS
ORION I						
1.3 - 1.6 - 1.6i	X		83-86	1492160	**KCR528**	
1.3 - 1.6 - 1.6i	X		83-86	1591389	**KCR687**	
1.6 D	X		84-86	1492160	**KCR528**	
1.6 D	X		84-86	1591389	**KCR687**	

follow FORD

MODELLO MODEL	ASS.ANT. FRONT AXLE	ASS.POS. REAR AXLE	ANNO YEAR	RIF ORIGINALE ORIGINAL REF	RIF CORAM CORAM REF	NOTE NOTES
ORION II						
1.3 - 1.4 - 1.6	X		85-90	1492160	**KCR528**	
1.4 - 1.6	X		85-90	1591389	**KCR687**	
1.4 Cat	X		87-90	1492160	**KCR528**	
1.4 Cat	X		87-90	1591389	**KCR687**	
1.6 D	X		85-89	1492160	**KCR528**	
1.6 D	X		85-89	1591389	**KCR687**	
1.6 i - 1.6 i Cat	X		86-90	1492160	**KCR528**	
1.6 i - 1.6 i Cat	X		86-90	1591389	**KCR687**	
1.8 D	X		89-90	1492160	**KCR528**	
1.8 D	X		89-90	1591389	**KCR687**	
P 100 I						
1.6	X		82-87	1492160	**KCR528**	
TOURNEO CONNECT						
1.8 16V - 1.8 TDCi	X		feb-13	1484266	**KCR13006**	
1.8 TDCi/TDDi/DI	X		feb-13	1484266	**KCR13006**	
TOURNEO COURIER Kombi						
1.0 EcoBoost - 1.5 TDCi - 1.6 TDCi	X		14->	1582282	**KCR13008**	SI ABS
1.0 EcoBoost - 1.5 TDCi - 1.6 TDCi	X		14->	1582282	**KCR13008**	SI ABS
1.5 EcoBlue	X		18->	1582282	**KCR13008**	SI ABS
TRANSIT Autobus						
2.0 - 2.5 DI - 2.5 TD	X		91-00	1053115	**KCR13005**	
2.0 - 2.5 DI - 2.5 TD		X	91-00	5025900	**KCR13007**	
2.0 CNG	X		94-00	1053115	**KCR13005**	
2.0 CNG		X	94-00	5025900	**KCR13007**	
2.0 DI - 2.4 DI	X		00-06	1201300	**KMR13004**	
2.0 i - 2.9 i	X		91-94	1053115	**KCR13005**	
2.0 i - 2.9 i		X	91-94	5025900	**KCR13007**	
2.0 TDCi	X		02-giu	1201300	**KMR13004**	
2.4 TDCi	X		04-giu	1201300	**KMR13004**	
2.4 TDE	X		01-giu	1201300	**KMR13004**	
TRANSIT CONNECT						
1.8 16V - 1.8 Di - 1.8 TDCi	X		feb-13	1484266	**KCR13006**	

follow FORD

MODELLO MODEL	ASS.ANT. FRONT AXLE	ASS.POS. REAR AXLE	ANNO YEAR	RIF ORIGINALE ORIGINAL REF	RIF CORAM CORAM REF	NOTE NOTES
TRANSIT COURIER Kombi						
1.0 EcoBoost - 1.5 TDCi - 1.6 TDCi	X		14->	1582282	**KCR13008**	SI ABS
1.5 EcoBlue	X		18->	1582282	**KCR13008**	SI ABS
TRANSIT Furgonato						
2.0 - 2.5 DI - 2.5 TD	X		91-00	1053115	**KCR13005**	
2.0 - 2.5 DI - 2.5 TD		X	91-00	5025900	**KCR13007**	
2.0 DI - 2.4 DI - 2.4 DI RWD	X		00-06	1201300	**KMR13004**	
2.0 i	X		91-94	1053115	**KCR13005**	
2.0 i		X	91-94	5025900	**KCR13007**	
2.0 TD	X		00-03	1201300	**KMR13004**	
2.0 TDCi	X		02-giu	1201300	**KMR13004**	
2.3 16V RWD - 2.3 BiFuel	X		01-giu	1201300	**KMR13004**	
2.4 TDCi	X		04-giu	1201300	**KMR13004**	
2.4 TDE	X		01-giu	1201300	**KMR13004**	
2.5 TDI	X		94-00	1053115	**KCR13005**	
2.5 TDI		X	94-00	5025900	**KCR13007**	
TRANSIT Pianale piatto						
2.0 - 2.5 DI - 2.5 TD	X		91-00	1053115	**KCR13005**	
2.0 - 2.5 DI - 2.5 TD		X	91-00	5025900	**KCR13007**	
2.0 DI - 2.4 DI	X		00-06	1201300	**KMR13004**	
2.0 TDCi	X		02-giu	1201300	**KMR13004**	
2.3 16V - 2.4 TDE	X		01-giu	1201300	**KMR13004**	
2.4 TDCi	X		04-giu	1201300	**KMR13004**	
TRANSIT TOURNEO						
2.0 - 2.4 D - 2.5 DI - 2.5 TD	X		94-00	1053115	**KCR13005**	
2.0 - 2.4 D - 2.5 DI - 2.5 TD		X	94-00	5025900	**KCR13007**	

IRISBUS

MODELLO MODEL	ASS.ANT. FRONT AXLE	ASS.POS. REAR AXLE	ANNO YEAR	RIF ORIGINALE ORIGINAL REF	RIF CORAM CORAM REF	NOTE NOTES
DAILY TOURYS						
16, 19	X		06->	42470845	**KCR12801**	

IVECO

MODELLO MODEL	ASS.ANT. FRONT AXLE	ASS.POS. REAR AXLE	ANNO YEAR	RIF ORIGINALE ORIGINAL REF	RIF CORAM CORAM REF	NOTE NOTES
DAILY CITYS Autobus						
50C/E - 50C14G Natural Power	X	X	15-16	42558516	**KCR12802**	
50C15 - 50C17	X	X	14-16	42558516	**KCR12802**	
DAILY II Autobus						
A 40-10 - A 40-12 - A 45-10 - A 45-12	X		96-99	42470845	**KCR12801**	
A 40-10 - A 40-12 - A 45-10 - A 45-12	X		96-99	42558516	**KCR12802**	
DAILY II Cassone						
35-10	X		89-99	42558516	**KCR12802**	
35-12	X		95-99	42558516	**KCR12802**	
35-8	X		91-98	42558516	**KCR12802**	
40-10 4x4	X		97-99	42470845	**KCR12801**	
40-10 4x4	X		97-99	42558516	**KCR12802**	
49-12 V	X		96-99	42470845	**KCR12801**	
49-12 V	X		96-99	42558516	**KCR12802**	
DAILY II Pianale piatto						
35-10 - 35-12 - 49-10 - 49-12	X		96-99	42470845	**KCR12801**	
35-10 - 35-12 - 49-10 - 49-12	X		96-99	42558516	**KCR12802**	
35-8	X		98-99	42470845	**KCR12801**	
35-8	X		98-99	42558516	**KCR12802**	
40-10 W 4x4	X		97-99	42470845	**KCR12801**	
40-10 W 4x4	X		97-99	42558516	**KCR12802**	
DAILY II Ribaltabile						
35-10 K	X		97-99	42470845	**KCR12801**	
35-10 K	X		97-99	42558516	**KCR12802**	
35-12 K	X		96-98	42470845	**KCR12801**	
35-12 K	X		96-98	42558516	**KCR12802**	
35-8 K	X		98-99	42470845	**KCR12801**	
35-8 K	X		98-99	42558516	**KCR12802**	
49-10 K - 49-12 K	X		96-99	42470845	**KCR12801**	
49-10 K - 49-12 K	X		96-99	42558516	**KCR12802**	

follow IVECO

MODELLO MODEL	ASS.ANT. FRONT AXLE	ASS.POS. REAR AXLE	ANNO YEAR	RIF ORIGINALE ORIGINAL REF	RIF CORAM CORAM REF	NOTE NOTES
DAILY III Autobus						
35 S 12, 35 C 12, 40 C 12	X		03-giu	42470845	**KCR12801**	
35 S 13, 40 C 13, 50 C 13 - 40 C 11, 50 C 11 - 40 C 15, 50 C 15	X		99-06	42470845	**KCR12801**	
35 S 14, 50 C 14 - 40 C 17, 50 C 17	X		04-giu	42470845	**KCR12801**	
40 C 11, 50 C 11 - 40 C 15, 50 C 15	X		99-06	42558516	**KCR12802**	
40 C 17, 50 C 17	X		04-giu	42558516	**KCR12802**	
50 C 11 Natural Power	X		02-giu	42470845	**KCR12801**	
50 C 11 Natural Power	X		02-giu	42558516	**KCR12802**	
DAILY III Cassone						
2.8 CNG - 35 S 11 V, 35 C 11 V - 35 S 13V, 35 C 13 V	X		99-07	42470845	**KCR12801**	
2.8 CNG - 35 S 11 V, 35 C 11 V - 35 S 13V, 35 C 13 V	X		99-07	42558516	**KCR12802**	
29 L 12 V - 35 C 12 V, 35 S 12 V - 35 S 15 V, 35 C 15 V	X		02-lug	42558516	**KCR12802**	
35 C 12 V, 35 S 12 V - 35 S 15 V, 35 C 15 V	X		02-lug	42470845	**KCR12801**	
35 C 14 - 40 C 14 - 50 C 14 - 50 C 17	X		04-giu	42470845	**KCR12801**	
35 C 14 - 40 C 14 - 50 C 14 - 50 C 17	X		04-giu	42558516	**KCR12802**	
35 S 14 - 35 C 17, 35 S 17 - 40 C 17, 40 S 17	X		05-giu	42470845	**KCR12801**	
35 S 14 - 35 C 17, 35 S 17 - 40 C 17, 40 S 17	X		05-giu	42558516	**KCR12802**	
35 S 9 V, 35 C 9 V - 50 C 11 - 50 C 13	X		99-07	42470845	**KCR12801**	
35 S 9 V, 35 C 9 V - 50 C 11 - 50 C 13	X		99-07	42558516	**KCR12802**	
40 C 13 - 45 C 14	X		99-06	42470845	**KCR12801**	
40 C 13 - 45 C 14	X		99-06	42558516	**KCR12802**	
40 C 15 - 50 C 15	X		01-giu	42470845	**KCR12801**	
40 C 15 - 50 C 15	X		01-giu	42558516	**KCR12802**	
DAILY III Pianale piatto						
35 C 10 V, 35 S 10 V - 35 C 12, 35 S 12	X		02-giu	42470845	**KCR12801**	
35 C 10 V, 35 S 10 V - 35 C 12, 35 S 12	X		02-giu	42558516	**KCR12802**	
35 C 14 - 40 C 14 - 50 C 14 - 50 C 17	X		04-giu	42470845	**KCR12801**	
35 C 14 - 40 C 14 - 50 C 14 - 50 C 17 - 65 C 14	X		04-giu	42558516	**KCR12802**	
35 C 15 - 35 C 9, 35 S 9 - 40 C 15 - 50 C 15	X		01-giu	42470845	**KCR12801**	
35 C 15 - 35 C 9, 35 S 9 - 40 C 15 - 50 C 15	X		01-giu	42558516	**KCR12802**	
35 S 11, 35 C 11 - 35 S 13, 35 C 13 - 35 S 9, 35 C 9 - 40 C 13	X		99-06	42470845	**KCR12801**	
35 S 11, 35 C 11 - 35 S 13, 35 C 13 - 35 S 9, 35 C 9 - 40 C 13	X		99-06	42558516	**KCR12802**	
35 S 14 - 35 C 17, 35 S 17 - 40 C 17, 40 S 17	X		05-giu	42470845	**KCR12801**	
35 S 14 - 35 C 17, 35 S 17 - 40 C 17, 40 S 17	X		05-giu	42558516	**KCR12802**	
50 C 11 - 50 C 11 Natural Power - 50 C 13 -	X		99-06	42470845	**KCR12801**	
50 C 11 - 50 C 11 Natural Power - 50 C 13 -	X		99-06	42558516	**KCR12802**	
DAILY IV Autobus						
35S14, 35S14 /P	X		06-nov	42470845	**KCR12801**	

follow IVECO

MODELLO MODEL	ASS.ANT. FRONT AXLE	ASS.POS. REAR AXLE	ANNO YEAR	RIF ORIGINALE ORIGINAL REF	RIF CORAM CORAM REF	NOTE NOTES
DAILY IV Cassone						
29L10 V29L12 V, 29L12 V/P - 35C10, 35S10	X		06-nov	42470845	**KCR12801**	
29L14 C, 29L14 C/P, 29L14 V, 29L14 V/P	X		06-nov	42470845	**KCR12801**	
35C10, 35S10 - 35C12 V, 35C12 V/P, 35S12 V, 35S12 V/P	X		06-nov	42558516	**KCR12802**	
35C11 V, 35S11 V - 35C13 V, 35C13 V/P, 35S13 V, 35S13 V/P	X		07-nov	42470845	**KCR12801**	
35C11 V, 35S11 V - 35C13 V, 35C13 V/P, 35S13 V, 35S13 V/P	X		07-nov	42558516	**KCR12802**	
35C12 V, 35C 12 V/P, 35S13 V, 35S12 V/P	X		06-nov	42470845	**KCR12801**	
35C14 GV, 35C14 GV/P, 35S14 GV, 35S14 GV/P	X		07-nov	42470845	**KCR12801**	
35C14 GV, 35C14 GV/P, 35S14 GV, 35S14 GV/P	X		07-nov	42558516	**KCR12802**	
35C14 V, 35C14 V/P, 35S14 V, 35S14 V/P	X		09-nov	42470845	**KCR12801**	
35C14 V, 35C14 V/P, 35S14 V, 35S14 V/P	X		09-nov	42558516	**KCR12802**	
35C15 V, 35C15 V/P	X		06-nov	42470845	**KCR12801**	
35C15 V, 35C15 V/P	X		06-nov	42558516	**KCR12802**	
35C17 V, 35C17 V/P, 35S17 V, 35S17 V/P	X		07-nov	42558516	**KCR12802**	
35C18 V, 35C18 V/P, 35S18 V, 35S18 V/P	X		07-nov	42470845	**KCR12801**	
35C18 V, 35C18 V/P, 35S18 V, 35S18 V/P	X		06-nov	42558516	**KCR12802**	
35S14 C, 35S14 C/P, 35S14 V, 35S14 V/P, 35C14 V	X		06-nov	42470845	**KCR12801**	
40C10 V - 40C12 V, 40C14 V/P	X		06-nov	42470845	**KCR12801**	
40C10 V - 40C12 V, 40C14 V/P	X		06-nov	42558516	**KCR12802**	
40C11 V - 40C13 V, 40C13 V/P - 40C14 GV, 40C14 GV/P	X		07-nov	42470845	**KCR12801**	
40C11 V - 40C13 V, 40C13 V/P - 40C14 GV, 40C14 GV/P	X		07-nov	42558516	**KCR12802**	
40C14 V, 40C14 V/P - 50C14 V, 50C14 V/P	X		09-nov	42470845	**KCR12801**	
40C14 V, 40C14 V/P - 50C14 V, 50C14 V/P	X		09-nov	42558516	**KCR12802**	
40C15 V, 40C15 V/P - 40C18 V, 40C18 V/P - 45C15 V	X		06-nov	42470845	**KCR12801**	
40C15 V, 40C15 V/P - 40C18 V, 40C18 V/P - 45C15 V	X		06-nov	42558516	**KCR12802**	
40C17 V, 40C17 V/P - 45C17 V, 45C17 V/P	X		07-nov	42470845	**KCR12801**	
40C17 V, 40C17 V/P - 45C17 V, 45C17 V/P	X		07-nov	42558516	**KCR12802**	
45C18 - 50C15 V, 50C15 V/P - 50C18 V, 50C18 V/P	X		06-nov	42470845	**KCR12801**	
45C18 - 50C15 V, 50C15 V/P - 50C18 V, 50C18 V/P - 60C15 V	X		06-nov	42558516	**KCR12802**	
50C14 GV, 50C14 GV/P - 50C17 V, 50C17 V/P	X		07-nov	42470845	**KCR12801**	
50C14 GV, 50C14 GV/P - 50C17 V, 50C17 V/P	X		07-nov	42558516	**KCR12802**	
60C15V - 60C18 - 65C15 - 65C18	X		06-nov	42470845	**KCR12801**	
60C17 V, 60C17 V/P	X		07-nov	42558516	**KCR12802**	
60C17 V, 60C17 V/P - 65C17 V, 65C17 V/P	X		07-nov	42470845	**KCR12801**	
65C14V, 65C14 V/P - 70C14V, 70C14 V/P	X		09-nov	42470845	**KCR12801**	
70C17 V, 70C17 V/P	X		07-nov	42470845	**KCR12801**	

follow IVECO

MODELLO MODEL	ASS.ANT. FRONT AXLE	ASS.POS. REAR AXLE	ANNO YEAR	RIF ORIGINALE ORIGINAL REF	RIF CORAM CORAM REF	NOTE NOTES
DAILY IV Pianale piatto						
35C10, 35S10 - 35C12, 35S12 - 35C14, 35S14 35S14 /P	X		06-nov	42470845	**KCR12801**	
35C10, 35S10 - 35C12, 35S12 - 35C14, 35S14 35S14 /P	X		06-nov	42558516	**KCR12802**	
35C11, 35S11, 35S11 D, 35S11 /P	X		07-nov	42470845	**KCR12801**	
35C11, 35S11, 35S11 D, 35S11 /P	X		07-nov	42558516	**KCR12802**	
35C13, 35C13 /P, 35S13 D, 35S13 /P	X		07-nov	42470845	**KCR12801**	
35C13, 35C13 /P, 35S13 D, 35S13 /P	X		07-nov	42558516	**KCR12802**	
35C14 G, 35C14 G/P, 35S14 G, 35S14 G/P, 35C14 GD	X		07-nov	42470845	**KCR12801**	
35C14 G, 35C14 G/P, 35S14 G, 35S14 G/P, 35C14 GD	X		07-nov	42558516	**KCR12802**	
35C14, 35C14 /P, 35S14 /P, 35S14 D, 35S14 D/P	X		09-nov	42470845	**KCR12801**	
35C14, 35C14 /P, 35S14 /P, 35S14 D, 35S14 D/P	X		09-nov	42558516	**KCR12802**	
35C15 - 35C18, 35S18 - 40C10 - 40C12 - 40C15 - 40C18	X		06-nov	42470845	**KCR12801**	
35C15 - 35C18, 35S18 - 40C10 - 40C12 - 40C15 - 40C18	X		06-nov	42558516	**KCR12802**	
35C17, 35C17 /P, 35S17, 35S17 /P, 35S17D	X		07-nov	42558516	**KCR12802**	
35S17 W, 35S17 WD	X		07-nov	42558516	**KCR12802**	
40C11, 40C11 D - 40C13, 40C13 /P - 40C14 G, 40C14 G/P	X		07-nov	42470845	**KCR12801**	
40C11, 40C11 D - 40C13, 40C13 /P - 40C14 G, 40C14 G/P	X		07-nov	42558516	**KCR12802**	
40C14, 40C14 /P - 45C14, 45C14 /P - 50C14, 50C14 /P	X		09-nov	42470845	**KCR12801**	
40C14, 40C14 /P - 45C14, 45C14 /P - 50C14, 50C14 /P	X		09-nov	42558516	**KCR12802**	
40C17, 40C17 /P - 45C17, 45C17 /P - 50C17, 50C17 /P	X		07-nov	42470845	**KCR12801**	
40C17, 40C17 /P - 45C17, 45C17 /P - 50C17, 50C17 /P	X		07-nov	42558516	**KCR12802**	
45C15 - 45C18, 45C18/P, 45C18 D, 45C18 D/P - 50C15	X		06-nov	42470845	**KCR12801**	
45C15 - 45C18, 45C18/P, 45C18 D, 45C18 D/P - 50C15	X		06-nov	42558516	**KCR12802**	
50C14 G, 50C14 G/P - 50C14 GD, 50C14 GD/P	X		07-nov	42470845	**KCR12801**	
50C14 G, 50C14 G/P - 50C14 GD, 50C14 GD/P	X		07-nov	42558516	**KCR12802**	
50C17, 50C17 /P - 55S17 W, 55S17 WD	X		07-nov	42558516	**KCR12802**	
50C18	X		06-nov	42470845	**KCR12801**	
50C18	X		06-nov	42558516	**KCR12802**	
60C14, 60C14 /P - 65C14, 65C14 /P - 70C14, 70C14 /P	X		09-nov	42558516	**KCR12802**	
60C15, 60C15 /P, 60C15 D, 60C15 D/P - 60C18	X		06-nov	42558516	**KCR12802**	
60C17, 60C17 /P - 65C14 G, 65C14 G/P, 65C14 GD, 65C14GD/P	X		07-nov	42558516	**KCR12802**	
65C15, 65C15 /P, 65C15 D, 65C15 D/P - 65C18	X		06-nov	42558516	**KCR12802**	
65C17, 65C17 /P - 70C17, 70C17 /P	X		07-nov	42558516	**KCR12802**	
70C15	X		08-nov	42558516	**KCR12802**	

follow IVECO

MODELLO MODEL	ASS.ANT. FRONT AXLE	ASS.POS. REAR AXLE	ANNO YEAR	RIF ORIGINALE ORIGINAL REF	RIF CORAM CORAM REF	NOTE NOTES
DAILY IV Ribaltabile						
35C10 K	X		06-nov	42470845	**KCR12801**	
35C10 K	X		06-nov	42558516	**KCR12802**	
35C11 K, 35C11 DK, 35S11 K, 35S11 DK	X		07-nov	42470845	**KCR12801**	
35C11 K, 35C11 DK, 35S11 K, 35S11 DK	X		07-nov	42558516	**KCR12802**	
35C12 - 35C15 - 35C18 - 50C15 - 50C18 - 60C15 - 60C18	X		06-nov	42470845	**KCR12801**	
35C12 - 35C15 - 35C18 - 50C15 - 50C18 - 60C15 - 60C18	X		06-nov	42558516	**KCR12802**	
35C13 K, 35C13 DK, 35S13 K, 35S13 DK	X		07-nov	42470845	**KCR12801**	
35C13 K, 35C13 DK, 35S13 K, 35S13 DK	X		07-nov	42558516	**KCR12802**	
35C14 K, 35C14 DK, 35S14K, 35S14 DK	X		09-nov	42470845	**KCR12801**	
35C14 K, 35C14 DK, 35S14K, 35S14 DK	X		09-nov	42558516	**KCR12802**	
35C17 K, 35C17 DK, 35S17 K, 35S17 DK	X		07-nov	42470845	**KCR12801**	
35C17 K, 35C17 DK, 35S17 K, 35S17 DK	X		07-nov	42558516	**KCR12802**	
35S14 K, 35S14 DK - 40C17K, 40C17 DK	X		07-nov	42470845	**KCR12801**	
35S14 K, 35S14 DK - 40C17K, 40C17 DK	X		07-nov	42558516	**KCR12802**	
40C14 K, 40C14 DK - 50C14 K, 50C14 DK	X		09-nov	42470845	**KCR12801**	
40C14 K, 40C14 DK - 50C14 K, 50C14 DK	X		09-nov	42558516	**KCR12802**	
50C17 K, 50C17 DK - 60C17K, 60C17 DK	X		07-nov	42470845	**KCR12801**	
50C17 K, 50C17 DK - 60C17K, 60C17 DK	X		07-nov	42558516	**KCR12802**	
60C14K, 60C14 DK - 65C14K, 60C14 DK	X		09-nov	42470845	**KCR12801**	
60C14K, 60C14 DK - 65C14K, 60C14 DK	X		09-nov	42558516	**KCR12802**	
65C17K, 65C17 DK, 65C17 KK	X		07-nov	42470845	**KCR12801**	
65C17K, 65C17 DK, 65C17 KK	X		07-nov	42558516	**KCR12802**	
70C14K, 70C14 DK, 70C14 KK	X		09-nov	42470845	**KCR12801**	
70C14K, 70C14 DK, 70C14 KK	X		09-nov	42558516	**KCR12802**	
70C17 K, 70C17 DC, 70C17 KK	X		07-nov	42470845	**KCR12801**	
70C17 K, 70C17 DC, 70C17 KK	X		07-nov	42558516	**KCR12802**	
DAILY LINE Autobus						
40C15, 50C15, 60C15	X	X	14-16	42558516	**KCR12802**	
40C18, 50C18, 60C18	X	X	16->	42558516	**KCR12802**	
50C/E	X	X	15->	42558516	**KCR12802**	
50C14 Natural Power	X	X	14->	42558516	**KCR12802**	
DAILY TOURYS Autobus						
50C17, 65C17	X	X	14-16	42558516	**KCR12802**	
50C18, 65C18	X	X	16->	42558516	**KCR12802**	

follow IVECO

MODELLO MODEL	ASS.ANT. FRONT AXLE	ASS.POS. REAR AXLE	ANNO YEAR	RIF ORIGINALE ORIGINAL REF	RIF CORAM CORAM REF	NOTE NOTES
DAILY V Cassone						
29L11 V, 35C11 V, 35S11 V, 40C11 V	X		nov-14	42470845	**KCR12801**	
29L11 V, 35C11 V, 35S11 V, 40C11 V	X		nov-14	42558516	**KCR12802**	
29L13 V, 35C13 V, 35S13 V, 40C13 V	X		nov-14	42470845	**KCR12801**	
29L13 V, 35C13 V, 35S13 V, 40C13 V	X		nov-14	42558516	**KCR12802**	
29L15 V, 35S15 V, 35C15L V, 40C15L V, 50C15L V	X		nov-14	42470845	**KCR12801**	
29L15 V, 35S15 V, 35C15L V, 40C15L V, 50C15L V	X		nov-14	42558516	**KCR12802**	
35C15 V, 40C15L V, 45C15 V, 50C15 V, 60C15 V, 65C15 V	X		nov-14	42470845	**KCR12801**	
35C15 V, 40C15L V, 45C15 V, 50C15 V, 60C15 V, 65C15 V	X		nov-14	42558516	**KCR12802**	
35C17 V, 35S17L V, 40C17 V, 45C17 V, 50C17 V, 60C17 V	X		nov-14	42470845	**KCR12801**	
35C17 V, 35S17L V, 40C17 V, 45C17 V, 50C17 V, 60C17 V	X		nov-14	42558516	**KCR12802**	
35C21 V, 35S21L V, 40C21 V, 45C21 V, 50C21 V	X		nov-14	42470845	**KCR12801**	
35C21 V, 35S21L V, 40C21 V, 45C21 V, 50C21 V	X		nov-14	42558516	**KCR12802**	
35S, 35C Electric - 50 C Electric	X		nov-14	42470845	**KCR12801**	
35S, 35C Electric - 50 C Electric	X		nov-14	42558516	**KCR12802**	
Nat. Power 35S14, 35C14, 40C14, 50C14, 65C14, 70C14	X		nov-14	42470845	**KCR12801**	
Nat. Power 35S14, 35C14, 40C14, 50C14, 65C14, 70C14	X		nov-14	42558516	**KCR12802**	
DAILY V Pianale piatto						
26L11, 26L11D, 35C11D, 35S11, 40C11	X		nov-14	42470845	**KCR12801**	
26L11, 26L11D, 35C11D, 35S11, 40C11	X		nov-14	42558516	**KCR12802**	
29L13, 29L13D, 35C13D, 40C13	X		nov-14	42470845	**KCR12801**	
29L13, 29L13D, 35C13D, 40C13	X		nov-14	42558516	**KCR12802**	
29L15 V, 35S15, 35C15L V, 40C15L V, 50C15L V	X		nov-14	42470845	**KCR12801**	
29L15 V, 35S15, 35C15L V, 40C15L V, 50C15L V	X		nov-14	42558516	**KCR12802**	
35C15, 35C15D, 35S15, 40C15, 45C15, 50C15, 60C15, 65C15	X		nov-14	42470845	**KCR12801**	
35C15, 35C15D, 35S15, 40C15, 45C15, 50C15, 60C15, 65C15	X		nov-14	42558516	**KCR12802**	
35C17, 35C17D, 35S17, 40C17, 45C17, 50C17, 60C17, 70C17	X		nov-14	42470845	**KCR12801**	
35C17, 35C17D, 35S17, 40C17, 45C17, 50C17, 60C17, 70C17	X		nov-14	42558516	**KCR12802**	
35C21, 35S21, 40C21, 45C21, 50C21, 60C21, 70C21	X		nov-14	42470845	**KCR12801**	
35C21, 35S21, 40C21, 45C21, 50C21, 60C21, 70C21	X		nov-14	42558516	**KCR12802**	
Nat. Power 35S14, 35C14, 40C14, 50C14, 65C14, 70C14	X		nov-14	42470845	**KCR12801**	
Nat. Power 35S14, 35C14, 40C14, 50C14, 65C14, 70C14	X		nov-14	42558516	**KCR12802**	
DAILY V Ribaltabile						
35C11K, 35S11DKP - 35C13K, 35S13DKP	X		nov-14	42470845	**KCR12801**	
35C11K, 35S11DKP - 35C13K, 35S13DKP	X		nov-14	42558516	**KCR12802**	
35C15K, 35S15DKP, 50C15K, 60C15K, 65C15DK, 70C15K	X		nov-14	42470845	**KCR12801**	
35C15K, 35S15DKP, 50C15K, 60C15K, 65C15DK, 70C15K	X		nov-14	42558516	**KCR12802**	
35C17K, 35S17DKP, 50C17K, 65C17DK, 70C17K	X		nov-14	42470845	**KCR12801**	
35C17K, 35S17DKP, 50C17K, 65C17DK, 70C17K	X		nov-14	42558516	**KCR12802**	

follow IVECO

MODELLO MODEL	ASS.ANT. FRONT AXLE	ASS.POS. REAR AXLE	ANNO YEAR	RIF ORIGINALE ORIGINAL REF	RIF CORAM CORAM REF	NOTE NOTES
DAILY VI Cassone						
33S12, 35S12 - 33S14, 35S14 - 33S16, 35S16 - 35S/E	X		16->	42470845	**KCR12801**	
33S12, 35S12 - 33S14, 35S14 - 33S16, 35S16 - 35S/E	X		16->	42558516	**KCR12802**	
35S15, 35C15, 40C15, 50C15 - 35S18, 35C18, 40C18, 50C18	X		16->	42470845	**KCR12801**	
35S15, 35C15, 40C15, 50C15 - 35S18, 35C18, 40C18, 50C18	X	X	16->	42558516	**KCR12802**	
40C15, 50C15, 65C15 - 40C17, 50C17, 65C17	X		14-16	42470845	**KCR12801**	
40C15, 50C15, 65C15 - 40C17, 50C17, 65C17	X	X	14-16	42558516	**KCR12802**	
45C/E, 50C/E - Natural Power 35S14, 35C14	X		16->	42470845	**KCR12801**	
45C/E, 50C/E - Natural Power 35S14, 35C14	X	X	16->	42558516	**KCR12802**	
DAILY VI Furgonato						
33S11, 35S11, 35C11 - 33S13, 35S13, 35C13	X		14-16	42470845	**KCR12801**	
33S12, 35S12, 35C12 - 33S14, 35S14, 35C14	X		16->	42470845	**KCR12801**	
33S12, 35S12, 35C12 - 33S14, 35S14, 35C14	X	X	16->	42558516	**KCR12802**	
33S15, 35S15, 35C15	X		14-16	42470845	**KCR12801**	
33S16, 35S16, 35C16 - 35S/E - 40C/E, 50C/E	X		16->	42470845	**KCR12801**	
33S16, 35S16, 35C16 - 35S/E - 40C/E, 50C/E	X	X	16->	42558516	**KCR12802**	
35S15, 35C15, 40C15, 50C15, 65C15, 70C15	X		14->	42470845	**KCR12801**	
35S15, 35C15, 40C15, 50C15, 65C15, 70C15	X	X	14->	42558516	**KCR12802**	
35S17, 35C17, 40C17, 50C17, 55C17, 65C17, 70C17	X		14-16	42470845	**KCR12801**	
35S17, 35C17, 40C17, 50C17, 55C17, 65C17, 70C17	X	X	14-16	42558516	**KCR12802**	
35S18, 35C18, 40C18, 50C18, 65C18, 70C18	X		16->	42470845	**KCR12801**	
35S18, 35C18, 40C18, 50C18, 65C18, 70C18	X	X	16->	42558516	**KCR12802**	
35S21, 35C21, 40C21, 50C21, 65C21, 70C21	X		14->	42470845	**KCR12801**	
35S21, 35C21, 40C21, 50C21, 65C21, 70C21	X		14->	42558516	**KCR12802**	
45C/E, 50C/E	X	X	16->	42558516	**KCR12802**	
Nat. Power 35S14, 35C14, 40C14, 50C14, 65C14, 70C14	X		14->	42470845	**KCR12801**	
Nat. Power 35S14, 35C14, 40C14, 50C14, 65C14, 70C14	X	X	14->	42558516	**KCR12802**	

follow IVECO

MODELLO MODEL	ASS.ANT. FRONT AXLE	ASS.POS. REAR AXLE	ANNO YEAR	RIF ORIGINALE ORIGINAL REF	RIF CORAM CORAM REF	NOTE NOTES
DAILY VI Pianale piatto						
33S11, 35S11, 35C11 - 33S13, 35S13, 35C13	X		14-16	42470845	**KCR12801**	
33S12, 35S12, 35C12 - 33S14, 35S14, 35C14	X		16->	42470845	**KCR12801**	
33S12, 35S12, 35C12 - 33S14, 35S14, 35C14	X	X	16->	42558516	**KCR12802**	
33S15, 35S15, 35C15	X		14-16	42470845	**KCR12801**	
33S15, 35S15, 35C15	X		14-16	42558516	**KCR12802**	
33S16, 35S16, 35C16 - 35S/E, 35C/E - 40C/E, 50C/E	X		16->	42470845	**KCR12801**	
33S16, 35S16, 35C16 - 35S/E, 35C/E - 40C/E, 50C/E	X	X	16->	42558516	**KCR12802**	
35S14, 35S15, 35C15, 40S14, 40C15, 50C15, 65C15, 70C15	X		14-16	42470845	**KCR12801**	
35S14, 35S15, 35C15, 40S14, 40C15, 50C15, 65C15, 70C15	X	X	14-16	42558516	**KCR12802**	
35S15, 35C15, 40C15, 50C15, 65C15, 70C15, 72C15	X		16->	42470845	**KCR12801**	
35S15, 35C15, 40C15, 50C15, 65C15, 70C15, 72C15	X	X	16->	42558516	**KCR12802**	
35S17, 35C17, 40C17, 45S17, 45C17, 50C17, 55C17, 65C17	X		14->	42470845	**KCR12801**	
35S17, 35C17, 40C17, 45S17, 45C17, 50C17, 55C17, 65C17	X	X	14-16	42558516	**KCR12802**	
35S17, 55S17 4x4	X	X	15-16	42558516	**KCR12802**	
35S18, 35C18, 40C18, 50C18, 65C18, 70C18, 72C18	X		16->	42470845	**KCR12801**	
35S18, 35C18, 40C18, 50C18, 65C18, 70C18, 72C18	X	X	16->	42558516	**KCR12802**	
35S18, 55S18 4x4	X	X	16->	42558516	**KCR12802**	
35S21, 35C21, 40C21, 50C21, 65C21, 70C21	X		14->	42470845	**KCR12801**	
35S21, 35C21, 40C21, 50C21, 65C21, 70C21	X	X	14->	42558516	**KCR12802**	
45 C/E, 50C/E	X	X	16->	42558516	**KCR12802**	
Nat. Power 35S14, 35C14, 40C14, 50C14, 65C14, 70C14	X		14->	42470845	**KCR12801**	
Nat. Power 35S14, 35C14, 40C14, 50C14, 65C14, 70C14	X	X	14->	42558516	**KCR12802**	
MASSIF Pick-up						
3.0 HPI - 3.0 HPT	X	X	08-nov	42558516	**KCR12802**	
MASSIF Single Cab						
3.0 HPI - 3.0 HPT	X	X	08-nov	42558516	**KCR12802**	
MASSIF Station Wagon						
3.0 HPI - 3.0 HPT	X	X	08-nov	42558516	**KCR12802**	

KIA

MODELLO MODEL	ASS.ANT. FRONT AXLE	ASS.POS. REAR AXLE	ANNO YEAR	RIF ORIGINALE ORIGINAL REF	RIF CORAM CORAM REF	NOTE NOTES
CARNIVAL I						
2.5 V6 - 2.9 Tdi	X		99-01	OK552-33-047	**KCR14101**	

follow KIA

MODELLO MODEL	ASS.ANT. FRONT AXLE	ASS.POS. REAR AXLE	ANNO YEAR	RIF ORIGINALE ORIGINAL REF	RIF CORAM CORAM REF	NOTE NOTES
CARNIVAL II						
2.5 V6 - 2.9 CRDi	X		01-giu	OK552-33-047	**KCR14101**	
SORENTO I						
2.4 - 2.5 CRDi - 3.5 V6 4WD	X		02->	OK552-33-047	**KCR14101**	
3.3 V6	X		06->	OK552-33-047	**KCR14101**	
3.3 V6 4WD	X		07->	OK552-33-047	**KCR14101**	

LADA

MODELLO MODEL	ASS.ANT. FRONT AXLE	ASS.POS. REAR AXLE	ANNO YEAR	RIF ORIGINALE ORIGINAL REF	RIF CORAM CORAM REF	NOTE NOTES
110						
1.5 - 1.5 16V	X		95-05	2108-3103020	**KCR21302**	
1.6	X		00-12	2108-3103020	**KCR21302**	
2.0 i	X		96-00	2108-3103020	**KCR21302**	
Wankel	X		97-04	2108-3103020	**KCR21302**	
111						
1.5	X		96-09	2108-3103020	**KCR21302**	
1.5 16V	X		95-05	2108-3103020	**KCR21302**	
1.6	X		04-set	2108-3103020	**KCR21302**	
112						
1.5 - 1.5 16V	X		95-05	2108-3103020	**KCR21302**	
1.6	X		05-nov	2108-3103020	**KCR21302**	
KALINA Due volumi						
1.4 16V - 1.4 16V LPG		X	ago-13	2108-3104020	**KCR21301**	
1.6		X	apr-13	2108-3104020	**KCR21301**	
KALINA Station wagon						
1.4 16V - 1.4 16V LPG		X	ago-13	2108-3104020	**KCR21301**	
1.6		X	lug-13	2108-3104020	**KCR21301**	
KALINA Tre volumi						
1.4 16V		X	giu-13	2108-3104020	**KCR21301**	
1.4 16V LPG		X	ago-13	2108-3104020	**KCR21301**	
1.6		X	apr-13	2108-3104020	**KCR21301**	

follow LADA

MODELLO MODEL	ASS.ANT. FRONT AXLE	ASS.POS. REAR AXLE	ANNO YEAR	RIF ORIGINALE ORIGINAL REF	RIF CORAM CORAM REF	NOTE NOTES
PRIORA Due volumi						
1.6		X	ago-15	2108-3104020	**KCR21301**	
1.6 LPG		X	ago-13	2108-3104020	**KCR21301**	
PRIORA Station wagon						
1.6		X	set-15	2108-3104020	**KCR21301**	
PRIORA Tre volumi						
1.6		X	lug-18	2108-3104020	**KCR21301**	
1.6 LPG		X	set-16	2108-3104020	**KCR21301**	
SAMARA						
1100		X	88-99	2108-3104020	**KCR21301**	
1100	X		88-99	2108-3103020	**KCR21302**	
1300		X	87-99	2108-3104020	**KCR21301**	
1300	X		87-99	2108-3103020	**KCR21302**	
1500		X	87-96	2108-3104020	**KCR21301**	
1500	X		87-96	2108-3103020	**KCR21302**	
SAMARA Tre volumi						
1100		X	91-99	2108-3104020	**KCR21301**	
1100	X		91-99	2108-3103020	**KCR21302**	
1300		X	89-06	2108-3104020	**KCR21301**	
1300	X		89-06	2108-3103020	**KCR21302**	
1500		X	91-06	2108-3104020	**KCR21301**	
1500	X		91-06	2108-3103020	**KCR21302**	

LANCIA

MODELLO MODEL	ASS.ANT. FRONT AXLE	ASS.POS. REAR AXLE	ANNO YEAR	RIF ORIGINALE ORIGINAL REF	RIF CORAM CORAM REF	NOTE NOTES
A 112						
0.9 Junior		X	81-86	4399856	**KMR12004**	
0.9 Junior	X		81-86	5937306	**KCR12012**	
1.0 Abarth	X		78-84	5937306	**KCR12012**	
1.0 LX		X	84-86	4399856	**KMR12004**	
1.0 LX	X		84-86	5937306	**KCR12012**	

follow LANCIA

MODELLO MODEL	ASS.ANT. FRONT AXLE	ASS.POS. REAR AXLE	ANNO YEAR	RIF ORIGINALE ORIGINAL REF	RIF CORAM CORAM REF	NOTE NOTES
DEDRA						
1.6 16V - 1.8 16V LE - 1.8 GT 16V		X	96-99	46453887	**KMR12102**	
1.6 i.e. - 1.8 i.e. - 1.9 TDS - 2.0 i.e.		X	89-99	46453887	**KMR12102**	
1.6 LE Cat - 2.0 16V		X	94-99	46453887	**KMR12102**	
1.8 i.e. - 1.9 TDS - 2.0 i.e.	X		89-99	46423869	**KCR12009**	
2.0 16V	X		94-99	46423869	**KCR12009**	
2.0 HF Integrale	X		90-94	46423869	**KCR12009**	
2.0 i.e. Turbo		X	91-99	46453887	**KMR12102**	
2.0 i.e. Turbo	X		91-99	46423869	**KCR12009**	
2.0 i.e. Turbo Integrale	X		90-91	46423869	**KCR12009**	
2.0 Turbo		X	90-94	46453887	**KMR12102**	
2.0 Turbo	X		90-94	46423869	**KCR12009**	
DEDRA SW						
1.6 - 1.8 i.e. - 1.9 TDS - 2.0 16V		X	94-99	46453887	**KMR12102**	
1.6 16V - 1.8 16V LE - 1.8 GT 16V		X	96-99	46453887	**KMR12102**	
1.6 16V - 1.8 16V LE - 1.8 GT 16V	X		96-99	46423869	**KCR12009**	
1.8 i.e. - 1.9 TDS - 2.0 16V - 2.0 Integrale	X		94-99	46423869	**KCR12009**	
DELTA I						
1.3 - 1.5		X	79-92	4399856	**KMR12004**	
DELTA II						
1.4 i.e.	X		94-99	7555466	**KCR12006**	
1.4 i.e. - 1.9 TD		X	94-99	46453887	**KMR12102**	
1.6 i.e.	X		93-99	7555466	**KCR12006**	
1.6 i.e. - 1.8 i.e. - 2.0 16V - 2.0 16V Turbo		X	93-99	46453887	**KMR12102**	
1.6 i.e. 16V	X		96-99	7555466	**KCR12006**	
1.6 i.e. 16V - 1.8 i.e. 16V - 1.8 i.e. 16V GT - 2.0 16V Turbo		X	96-99	46453887	**KMR12102**	
1.8 i.e. - 2.0 16V	X		93-99	46423869	**KCR12009**	
1.8 i.e. 16V - 1.8 i.e. 16V GT	X		96-99	46423869	**KCR12009**	
1.9 TD	X		94-99	46423869	**KCR12009**	

follow LANCIA

MODELLO MODEL	ASS.ANT. FRONT AXLE	ASS.POS. REAR AXLE	ANNO YEAR	RIF ORIGINALE ORIGINAL REF	RIF CORAM CORAM REF	NOTE NOTES
DELTA III						
1.4 - 1.6 D Multijet	X		ago-14	46836196	**KCR12004**	SI ABS
1.4 - 1.6 D Multijet - 2.0 D Multijet		X	ago-14	60816007	**KMR12001**	SI ABS
1.4 16V	X		ott-14	46836196	**KCR12004**	SI ABS
1.4 16V		X	ott-14	60816007	**KMR12001**	SI ABS
1.4 Bifuel	X		nov-14	46836196	**KCR12004**	SI ABS
1.4 Bifuel		X	nov-14	60816007	**KMR12001**	SI ABS
1.8 - 1.9 D Multijet		X	set-14	60816007	**KMR12001**	SI ABS
1.8 - 1.9 D Multijet	X		set-14	46836200	**KCR12010**	SI ABS
2.0 D Multijet	X		ago-14	46836200	**KCR12010**	SI ABS
LYBRA						
1.6	X		00-05	1587565	**KCR12001**	SI ABS
1.6		X	00-05	60816007	**KMR12001**	SI ABS
1.6 16V - 1.8 16V	X		99-05	1587565	**KCR12001**	SI ABS
1.6 16V - 1.8 16V - 1.9 JTD - 2.0 20V - 2.4 JTD		X	99-05	60816007	**KMR12001**	SI ABS
LYBRA SW						
1.6	X		00-05	1587565	**KCR12001**	SI ABS
1.6		X	00-05	60816007	**KMR12001**	SI ABS
1.6 16V - 1.8 16V	X		99-05	1587565	**KCR12001**	SI ABS
1.6 16V - 1.8 16V - 1.9 JTD - 2.0 20V - 2.4 JTD		X	99-05	60816007	**KMR12001**	SI ABS
MUSA						
1.3 D Multijet - 1.4	X		04-dic	1587565	**KCR12001**	SI ABS
1.3 D Multijet - 1.4		X	04-dic	60816007	**KMR12001**	SI ABS
1.4 LPG	X		10-dic	46527732	**KCR12003**	SI ABS
1.4 LPG		X	10-dic	60816007	**KMR12001**	SI ABS
1.6 D Multijet - 1.9 D Multijet	X		08-dic	1587565	**KCR12001**	SI ABS
1.6 D Multijet - 1.9 D Multijet		X	08-dic	60816007	**KMR12001**	SI ABS
PRISMA						
1.3		X	83-89	4399856	**KMR12004**	
1.5		X	83-92	4399856	**KMR12004**	
THESIS						
2.0 Turbo - 2.4 - 2.4 JTD - 3.0 V6	X		02-set	51813925	**KMR12105**	SI ABS
2.4 D Multijet	X		06-set	51813925	**KMR12105**	SI ABS
3.2 V6	X		03-set	51813925	**KMR12105**	SI ABS

follow LANCIA

MODELLO MODEL	ASS.ANT. FRONT AXLE	ASS.POS. REAR AXLE	ANNO YEAR	RIF ORIGINALE ORIGINAL REF	RIF CORAM CORAM REF	NOTE NOTES
Y						
1.1	X		95-03	7555466	**KCR12006**	
1.1		X	95-03	46453887	**KMR12102**	
1.2 - 1.4 12V	X		96-03	7555466	**KCR12006**	
1.2 - 1.4 12V		X	96-03	46453887	**KMR12102**	
1.2 16V	X		97-03	7555466	**KCR12006**	
1.2 16V		X	97-03	46453887	**KMR12102**	
Y10						
1.0 - 1.0 Turbo	X		85-89	5890994	**KMR12201**	
1.0 - 1.0 Turbo		X	85-89	4399856	**KMR12004**	
1.0 Fire	X		85-91	5890995	**KMR12202**	
1.0 Fire		X	85-91	4399856	**KMR12004**	
1.0 Fire Catalytic-Conv	X		87-92	5890996	**KMR12203**	
1.0 Fire Catalytic-Conv		X	87-92	4399856	**KMR12004**	
1.0 Fire Trazione integrale	X		86-90	5890997	**KMR12204**	
1.0 Fire Trazione integrale		X	86-90	4400918	**KMR12005**	
1.1 Fire		X	95-95	4399856	**KMR12004**	
1.1 Fire - 1.1 Fire Trazione integrale	X		95-95	5890998	**KMR12205**	
1.1 Fire Trazione integrale		X	95-95	4400918	**KMR12005**	
1.1 i.e. Fire - 1.1 i.e. Fire Trazione integrale	X		89-95	5890999	**KMR12206**	
1.1 i.e. Fire - 1.3 i.e.		X	89-95	4399856	**KMR12004**	
1.1 i.e. Fire Trazione integrale		X	89-95	4400918	**KMR12005**	
1.3 i.e.	X		87-95	5890994	**KMR12201**	
YPSILON						
0.9 CNG - 0.9 TwinAir	X		11->	1587565	**KCR12001**	SI ABS
0.9 CNG - 0.9 TwinAir - 1.2 Bi-fuel		X	11->	60816007	**KMR12001**	SI ABS
1.1	X		95-03	46527732	**KCR12003**	SI ABS
1.1		X	95-03	60816007	**KMR12001**	SI ABS
1.2 - 1.2 Bi-fueL	X		11->	1587548	**KCR12005**	SI ABS
1.2 - 1.4 16V	X		96-11	46527732	**KCR12003**	SI ABS
1.2 - 1.4 16V		X	96-11	60816007	**KMR12001**	SI ABS
1.2 16V	X		97-03	46527732	**KCR12003**	SI ABS
1.2 16V		X	97-03	60816007	**KMR12001**	SI ABS
1.3 D Multijet	X		07->	1587565	**KCR12001**	SI ABS
1.3 D Multijet - 1.4		X	06-nov	60816007	**KMR12001**	SI ABS
1.3 JTD	X		03-nov	1587565	**KCR12001**	SI ABS
1.3 JTD		X	03-nov	60816007	**KMR12001**	SI ABS
1.4	X		06-nov	46527732	**KCR12003**	SI ABS
1.4 12V		X	96-03	60816007	**KMR12001**	SI ABS
1.4 LPG	X		10-nov	46527732	**KCR12003**	SI ABS
1.4 LPG		X	10-nov	60816007	**KMR12001**	SI ABS

LAND ROVER

MODELLO MODEL	ASS.ANT. FRONT AXLE	ASS.POS. REAR AXLE	ANNO YEAR	RIF ORIGINALE ORIGINAL REF	RIF CORAM CORAM REF	NOTE NOTES
FREELANDER						
1.8 16V 4x4	X	X	98-06	LR041425	**KCR25201**	
2.0 Td4 4x4	X	X	01-giu	LR041425	**KCR25201**	
2.6 V6 4x4	X	X	00-06	LR041425	**KCR25201**	
FREELANDER 2						
2.2 SD4 4x4 - 2.2 eD4		X	ott-14	LR041425	**KCR25201**	
2.2 TD4 4x4 - 3.2 4x4		X	giu-14	LR041425	**KCR25201**	
FREELANDER Soft Top						
1.8 i 16V 4x4 - 2.0 DI 4x4	X	X	98-06	LR041425	**KCR25201**	

MAZDA

MODELLO MODEL	ASS.ANT. FRONT AXLE	ASS.POS. REAR AXLE	ANNO YEAR	RIF ORIGINALE ORIGINAL REF	RIF CORAM CORAM REF	NOTE NOTES
121 III						
1.25 - 1.3 - 1.8 D		X	96-03	1019561	**KCR1333**	SI ABS
2						
1.25 - 1.4 - 1.4 CD - 1.6		X	03-lug	D350-26-151B	**KCR13001**	
1.25 - 1.4 - 1.4 CD - 1.6	X		03-lug	D351-33-047A	**KCR13002**	SI ABS
1.25 - 1.4 - 1.4 CD - 1.6	X		03-lug	D350-33-047A	**KCR13004**	
1.3 - 1.5	X		lug-15	D351-33-047-A	**KCR13008**	SI ABS
1.3 MZR	X		ott-15	D351-33-047-A	**KCR13008**	SI ABS
1.4 MZR-CD - 1.6 MZR-CD	X		ago-15	D351-33-047-A	**KCR13008**	SI ABS
1.5 MZR - 1.6 MZ-CD	X		nov-15	D351-33-047-A	**KCR13008**	SI ABS

MERCEDES-BENZ

MODELLO MODEL	ASS.ANT. FRONT AXLE	ASS.POS. REAR AXLE	ANNO YEAR	RIF ORIGINALE ORIGINAL REF	RIF CORAM CORAM REF	NOTE NOTES
124 Coupè						
220 CE - 320 CE	X		92-93	9815805	**KCR941**	
230 CE	X		87-92	9815805	**KCR941**	
230 CE Cat - 300 CE-24	X		89-92	9815805	**KCR941**	
300 CE	X		87-93	9815805	**KCR941**	

follow MERCEDES-BENZ

MODELLO MODEL	ASS.ANT. FRONT AXLE	ASS.POS. REAR AXLE	ANNO YEAR	RIF ORIGINALE ORIGINAL REF	RIF CORAM CORAM REF	NOTE NOTES
124 T-Model						
200 E - 220 TE - 280 TE - 320 TE	X		92-93	9815805	**KCR941**	
200 T	X		85-90	9815805	**KCR941**	
200 T D	X		85-91	9815805	**KCR941**	
200 TE	X		88-93	9815805	**KCR941**	
230 TE	X		85-92	9815805	**KCR941**	
250 T D	X		85-93	9815805	**KCR941**	
300 T D - 300 T Turbo-D	X		86-93	9815805	**KCR941**	
300 TE	X		86-92	9815805	**KCR941**	
300 TE-24	X		89-92	9815805	**KCR941**	
124 Tre volumi						
200	X		85-90	9815805	**KCR941**	
200 D - 230 E - 300 D	X		84-93	9815805	**KCR941**	
200 E - 250 Turbo-D	X		88-93	9815805	**KCR941**	
220 E - 280 E - 320 E	X		92-93	9815805	**KCR941**	
230 E Cat	X		89-93	9815805	**KCR941**	
250 D	X		85-93	9815805	**KCR941**	
260 E - 300 E	X		85-92	9815805	**KCR941**	
300 E-24	X		88-92	9815805	**KCR941**	
300 Turbo-D	X		86-93	9815805	**KCR941**	
190						
E 2.3-16	X		84-88	9815805	**KCR941**	
E 2.5-16	X		88-93	9815805	**KCR941**	
E 2.5-16 Evolution	X		89-93	9815805	**KCR941**	
CITAN Combi						
108 CDI - 109 CDI	X		12->	4153340700	**KCR21101**	SI ABS
111 CDI - 112	X		13->	4153340700	**KCR21101**	SI ABS
CITAN Furgonato						
108 CDI - 109 CDI	X		12->	4153340700	**KCR21101**	SI ABS
111 CDI - 112	X		13->	4153340700	**KCR21101**	SI ABS
CITAN Mixto						
109 CDI	X		12->	4153340700	**KCR21101**	SI ABS
111 CDI	X		13->	4153340700	**KCR21101**	SI ABS

follow MERCEDES-BENZ

MODELLO MODEL	ASS.ANT. FRONT AXLE	ASS.POS. REAR AXLE	ANNO YEAR	RIF ORIGINALE ORIGINAL REF	RIF CORAM CORAM REF	NOTE NOTES
CLASSE A						
A 150 - A 160 CDI - A 170 - A 180 CDI - A 200 - A 200 CDI	X		04-dic	1699810006	**KCR19002**	
A 160 - A 180	X		09-dic	1699810006	**KCR19002**	
A 160 CDI		X	98-04	1689810327	**KCR19001**	
A 170 CDI		X	98-01	1689810327	**KCR19001**	
A 200 TURBO	X		05-dic	1699810006	**KCR19002**	
E-CELL	X		10-dic	1699810006	**KCR19002**	
CLASSE B						
B 150 - B 170 - B 180 CDI - B 200 - B 200 CDI - B 200 TURBO	X		05-nov	1699810006	**KCR19002**	
B 170 NGT - B 180 NGT	X		08-nov	1699810006	**KCR19002**	
B 180	X		09-nov	1699810006	**KCR19002**	
CLASSE C						
C 180	X		00-02	29803002	**KCR19003**	
C 180 Kompressor	X		02-lug	29803002	**KCR19003**	
C 200 CDI - C 200 Kompressor - C 220 CDI - C 240 - C 270 CDI	X		00-07	29803002	**KCR19003**	
C 200 CGI Kompressor - C 30 CDI AMG	X		03-lug	29803002	**KCR19003**	
C 230 - C 280 - C 320 CDI - C 350	X		05-lug	29803002	**KCR19003**	
C 230 Kompressor - C 55 AMG	X		04-lug	29803002	**KCR19003**	
C 32 AMG Kompressor	X		01-lug	29803002	**KCR19003**	
C 320	X		00-07	29803002	**KCR19003**	
CLASSE C Coupé						
C 180 - C 200 CGI - C 200 CDI - C 250 - C 250 CDI - C 350	X		11->	29803002	**KCR19003**	
CLASSE C Sportcoupe						
C 160 Kompressor - C 180 Kompressor -	X		02-ago	29803002	**KCR19003**	
C 180	X		01-feb	29803002	**KCR19003**	
C 200 CDI - C 200 CGI Kompressor	X		03-ago	29803002	**KCR19003**	
C 200 Kompressor - C 220 CDI - C230 Kompressor	X		01-ago	29803002	**KCR19003**	
C 230 - C 350	X		05-ago	29803002	**KCR19003**	
C 320 - C 30 CDI AMG - C 32 AMG Kompressor	X		02-ago	29803002	**KCR19003**	

follow MERCEDES-BENZ

MODELLO MODEL	ASS.ANT. FRONT AXLE	ASS.POS. REAR AXLE	ANNO YEAR	RIF ORIGINALE ORIGINAL REF	RIF CORAM CORAM REF	NOTE NOTES
CLASSE C T-Model						
C 180	X		01-feb	29803002	**KCR19003**	
C 180	X		dic-14	29803002	**KCR19003**	
C 180 CDI - C 350 CGI	X		nov-14	29803002	**KCR19003**	
C 180 CGI	X		set-14	29803002	**KCR19003**	
C 180 Kompressor	X		feb-14	29803002	**KCR19003**	
C 200 CDI - C 200 Kompressor - C 220 CDI	X		gen-14	29803002	**KCR19003**	
C 200 CGI	X		lug-14	29803002	**KCR19003**	
C 200 CGI Kompressor - C 30 CDI AMG	X		03-lug	29803002	**KCR19003**	
C 230 Kompressor - C 55 AMG	X		04-lug	29803002	**KCR19003**	
C 240 - C 270 CDI - C 320 - C 32 AMG Kompressor	X		01-lug	29803002	**KCR19003**	
C 250 CDI - C 250 CGI - C 350 CDI	X		set-14	29803002	**KCR19003**	
C230 - C 280 - C 320 CDI - C 350	X		mag-14	29803002	**KCR19003**	
CLASSE CLC						
CLC 160	X		09-nov	29803002	**KCR19003**	
CLC 180 Kompressor - CL 200 CDI - CLC Kompressor	X		08-nov	29803002	**KCR19003**	
CLC 220 CDI - CLC 230 - CLC 350	X		08-nov	29803002	**KCR19003**	
CLASSE E						
E 200 - E 200 D - E 220 - E 250 D - E 250 Turbo-D - E 280	X		93-95	9815805	**KCR941**	
E 300 D - E 300Turbo-D - E 320	X		93-95	9815805	**KCR941**	
CLASSE E Cabriolet						
E 200 - E 220	X		93-98	9815805	**KCR941**	
E 200 - E 250 - E 350 BlueTEC - E 400	X		13-16	29803002	**KCR19003**	
E 200 CGI - E 220 CDI / BlueTEC / d - E 250 CDI / BlueTEC / d	X		ott-16	29803002	**KCR19003**	
E 250 CGI - E 500	X		ott-16	29803002	**KCR19003**	
E 300	X		nov-16	29803002	**KCR19003**	
E 320 - E 350 BlueTEC / d	X		14-16	29803002	**KCR19003**	
E 350	X		nov-14	29803002	**KCR19003**	
E 350 CDI	X		ott-13	29803002	**KCR19003**	
E 350 CGI	X		ott-14	29803002	**KCR19003**	

KIT RUOTA
WHEEL BEARING KITS
KITS ROULEMENTS ROUES

follow MERCEDES-BENZ

MODELLO MODEL	ASS.ANT. FRONT AXLE	ASS.POS. REAR AXLE	ANNO YEAR	RIF ORIGINALE ORIGINAL REF	RIF CORAM CORAM REF	NOTE NOTES
CLASSE E Coupé						
E 200 - E 220 - E 320	X		93-97	9815805	**KCR941**	
E 200 - E 250 - E 350 4matic - E 350 BlueTEC - E 400	X		13-16	29803002	**KCR19003**	
E 200 CGI - E 220 CDI / d	X		ott-16	29803002	**KCR19003**	
E 220 CDI	X		ott-14	29803002	**KCR19003**	
E 250 CDI / BlueTEC / d - E 250 CGI - E 500	X		set-16	29803002	**KCR19003**	
E 300	X		nov-16	29803002	**KCR19003**	
E 320 - E 350 BlueTEC / d	X		14-16	29803002	**KCR19003**	
E 350	X		nov-14	29803002	**KCR19003**	
E 350 CDI	X		set-13	29803002	**KCR19003**	
E 350 CGI	X		09-nov	29803002	**KCR19003**	
E 36 AMG	X		94-97	9815805	**KCR941**	
E 36 T AMG	X		94-96	9815805	**KCR941**	
CLASSE E T-Model						
E 200 T - E 220 T - E 250 TD - E 250 Turbo D - E 280 T	X		93-96	9815805	**KCR941**	
E 300 T Turbo-D - E 300 TD - E 320 T	X		93-96	9815805	**KCR941**	
CLASSE SL						
300 SL - 560 SL	X		85-89	9815805	**KCR941**	
420 SL	X		86-89	9815805	**KCR941**	
500 SL	X		80-89	9815805	**KCR941**	
CLK						
200 CDI - 280 - 320 CDI - 350	X		05-set	29803002	**KCR19003**	
200 CGI	X		03-set	29803002	**KCR19003**	
200 Kompressor - 240 - 270 CDI - 320 - 500 - 55 AMG	X		02-set	29803002	**KCR19003**	
63 AMG	X		giu-99	29803002	**KCR19003**	
CLK Cabriolet						
CLK 200 CGI - CLK 200 Kompressor	X		03-ott	29803002	**KCR19003**	
CLK 240 - CLK 320 - CLK 500	X		03-ott	29803002	**KCR19003**	
CLK 280 - CLK 320 CDI - CLK 350	X		05-ott	29803002	**KCR19003**	
CLK 55 AMG	X		02-ott	29803002	**KCR19003**	
CLK 63 AMG	X		06-ott	29803002	**KCR19003**	
CLK AMG DTM	X		04-mag	29803002	**KCR19003**	
SLC						
180 - 200 - 300 - AMG SLC 43	X		16->	29803002	**KCR19003**	
250 d	X		16-17	29803002	**KCR19003**	

follow MERCEDES-BENZ

MODELLO MODEL	ASS.ANT. FRONT AXLE	ASS.POS. REAR AXLE	ANNO YEAR	RIF ORIGINALE ORIGINAL REF	RIF CORAM CORAM REF	NOTE NOTES
SLK						
200 - 250	X		11->	29803002	**KCR19003**	
200 Kompressor	X		04-nov	29803002	**KCR19003**	
250 CDI / d	X		12->	29803002	**KCR19003**	
280	X		05-nov	29803002	**KCR19003**	
300	X		09-nov	29803002	**KCR19003**	
300	X		15->	29803002	**KCR19003**	
350 - 55 AMG	X		04->	29803002	**KCR19003**	

MG

MODELLO MODEL	ASS.ANT. FRONT AXLE	ASS.POS. REAR AXLE	ANNO YEAR	RIF ORIGINALE ORIGINAL REF	RIF CORAM CORAM REF	NOTE NOTES
MG ZT						
1.8 16V - 1.8 T 16V	X		03-mag	GHK 1692	**KCR25201**	
160 - 190	X		01-mag	GHK 1692	**KCR25201**	
180 - 2.0 CDTi	X		02-mag	GHK 1692	**KCR25201**	
MG ZT-T						
1.8 16V - 1.8 T 16V	X		03-mag	GHK 1692	**KCR25201**	
160 - 190	X		01-mag	GHK 1692	**KCR25201**	
180 - 2.0 CDTi	X		02-mag	GHK 1692	**KCR25201**	

MINI

MODELLO MODEL	ASS.ANT. FRONT AXLE	ASS.POS. REAR AXLE	ANNO YEAR	RIF ORIGINALE ORIGINAL REF	RIF CORAM CORAM REF	NOTE NOTES
MINI						
Cooper - One	X		01-giu	31222318454	**KMR01101**	SI ABS
Cooper S	X		02-giu	31222318454	**KMR01101**	SI ABS
John Cooper Works	X		06-giu	31222318454	**KMR01101**	SI ABS
One D - Works	X		03-giu	31222318454	**KMR01101**	SI ABS
MINI Cabriolet						
Cooper	X		04-ago	31222318454	**KMR01101**	SI ABS
Cooper S - John Cooper Works - One	X		04-lug	31222318454	**KMR01101**	SI ABS

NISSAN

MODELLO MODEL	ASS.ANT. FRONT AXLE	ASS.POS. REAR AXLE	ANNO YEAR	RIF ORIGINALE ORIGINAL REF	RIF CORAM CORAM REF	NOTE NOTES
INTERSTAR Autobus						
dCI 100 - dCI 140	X		03->	40210-00Q41F	**KCR20006**	
dCI 100 - dCI 140		X	03->	43210-00Q0K	**KCR20005**	
dCI 115 - dCI 80	X		02-giu	40210-00Q41F	**KCR20006**	
dCI 115 - dCI 80		X	02-giu	43210-00Q0K	**KCR20005**	
dCI 120 - dCI 150	X		06->	40210-00Q41F	**KCR20006**	
dCI 120 - dCI 150		X	06->	43210-00Q0K	**KCR20005**	
dCI 90	X		02->	40210-00Q41F	**KCR20006**	
dCI 90		X	02->	43210-00Q0K	**KCR20005**	
INTERSTAR Furgonato						
dCI 100		X	04->	43210-00Q0K	**KCR20005**	
dCI 100 - dCI 140	X		03->	40210-00Q41F	**KCR20006**	
dCI 100 - dCI 140		X	03->	43210-00Q0K	**KCR20005**	
dCI 100 - dCi 140	X		04->	40210-00Q41F	**KCR20006**	
dCI 115	X		02->	40210-00Q41F	**KCR20006**	
dCI 115		X	02->	43210-00Q0K	**KCR20005**	
dCI 115	X		03->	40210-00Q41F	**KCR20006**	
dCI 115 - dCi 140		X	03->	43210-00Q0K	**KCR20005**	
dCI 120 - dCI 150	X		06->	40210-00Q41F	**KCR20006**	
dCI 120 - dCI 150		X	06->	43210-00Q0K	**KCR20005**	
dCI 120 - dCI 150	X		06->	40210-00Q41F	**KCR20006**	
dCI 120 - dCI 150		X	06->	43210-00Q0K	**KCR20005**	
dCI 80	X		02-giu	40210-00Q41F	**KCR20006**	
dCI 80		X	02-giu	43210-00Q0K	**KCR20005**	
dCI 90	X		02->	40210-00Q41F	**KCR20006**	
dCI 90		X	02->	43210-00Q0K	**KCR20005**	
JUKE						
1.2 DIG-T - 1.6 DIG-T NISMO RS - 1.6 DIG-T NISMO RS 4x4	X		14->	40202-1KA0A	**KMR21301**	SI ABS
1.5 dCi - 1.6 - 1.6 DIG-T - 1.6 DIG-T 4x4	X		10->	40202-1KA0A	**KMR21301**	SI ABS
1.6 DIG-T NISMO - 1.6 DIG-T NISMO 4x4	X		13-14	40202-1KA0A	**KMR21301**	SI ABS
KUBISTAR Furgonato						
1.2 - 1.5 dCi - 1.6 16V	X		03->	40210-00Q1D	**KCR21004**	
1.2 16V	X		06->	40210-00Q1D	**KCR21004**	
dCi 85	X		06-set	40210-00Q1D	**KCR21004**	
LEAF						
Electric	X		10->	40202-1KA0A	**KMR21301**	SI ABS

follow NISSAN

MODELLO MODEL	ASS.ANT. FRONT AXLE	ASS.POS. REAR AXLE	ANNO YEAR	RIF ORIGINALE ORIGINAL REF	RIF CORAM CORAM REF	NOTE NOTES
MICRA C+C III						
1.4 16V - 1.6 160 SR		X	05->	6001548986	**KCR21001**	
1.4 16V - 1.6 160 SR	X		05->	40210-AX000	**KCR21101**	SI ABS
MICRA I						
1.0		X	82-89	40210-21000	**KCR21201**	
MICRA III						
1.0 16V - 1.2 16V - 1.4 16V - 1.5 dCi		X	03-ott	6001548986	**KCR21001**	
1.0 16V - 1.2 16V - 1.4 16V - 1.5 dCi	X		03-ott	40210-AX000	**KCR21101**	SI ABS
160 SR		X	05-ott	6001548986	**KCR21001**	
160 SR	X		05-ott	40210-AX000	**KCR21101**	SI ABS
NOTE						
1.4 - 1.5 dCi - 1.6		X	06-dic	6001548986	**KCR21001**	
1.4 - 1.5 dCi - 1.6	X		06-dic	40210-AX000	**KCR21101**	SI ABS
1.4 LPG	X		giu-13	40210-AX000	**KCR21101**	SI ABS
NT500						
35.15, 35.15 HD		X	13->	43210 LC42A	**KCR12802**	
NV400 Autobus						
dCi 100	X		nov-14	40210-00Q0H	**KCR21303**	SI ABS
dCi 110 - dCi 150	X		14->	40210-00Q0H	**KCR21303**	SI ABS
dCi 125	X		nov-16	40210-00Q0H	**KCR21303**	SI ABS
dCi 135 - dCi 160	X		14-16	40210-00Q0H	**KCR21303**	SI ABS
dCi 145	X		11->	40210-00Q0H	**KCR21303**	SI ABS
dCi 170	X		15->	40210-00Q0H	**KCR21303**	SI ABS
NV400 Furgonato						
dCi 100 - dCi 145 RWD	X		nov-14	40210-00Q0H	**KCR21303**	SI ABS
dCi 110 - dCi 135 - dCi 150	X		14->	40210-00Q0H	**KCR21303**	SI ABS
dCi 125 - dCi 125 RWD	X		nov-16	40210-00Q0H	**KCR21303**	SI ABS
dCi 130 - dCi 130 RWD - dCi 170	X		16->	40210-00Q0H	**KCR21303**	SI ABS
dCi 135 RWD - dCi 150 RWD - dCi 165 - dCi 165 RWD	X		14-16	40210-00Q0H	**KCR21303**	SI ABS
dCi 145	X		11->	40210-00Q0H	**KCR21303**	SI ABS
dCi 180	X		20->	40210-00Q0H	**KCR21303**	SI ABS

follow NISSAN

MODELLO MODEL	ASS.ANT. FRONT AXLE	ASS.POS. REAR AXLE	ANNO YEAR	RIF ORIGINALE ORIGINAL REF	RIF CORAM CORAM REF	NOTE NOTES
NV400 Pianale piatto						
dCi 100 - dCi 135	X		nov-14	40210-00Q0H	**KCR21303**	SI ABS
dCi 110 - dCi 165 RWD - dCi 150	X		14->	40210-00Q0H	**KCR21303**	SI ABS
dCi 125 - dCi 125 RWD	X		nov-16	40210-00Q0H	**KCR21303**	SI ABS
dCi 130 - dCi 170	X		16->	40210-00Q0H	**KCR21303**	SI ABS
dCi 145 - dCi 145 RWD	X		11->	40210-00Q0H	**KCR21303**	SI ABS
dCi 150 RWD - dCi 165	X		14-16	40210-00Q0H	**KCR21303**	SI ABS
dCi 180	X		20->	40210-00Q0H	**KCR21303**	SI ABS
PIXO						
1.0		X	09->	43210-4A00A	**KCR24001**	
PRIMASTAR Autobus						
1.9 dCi 100 - 1.9 dCi 80	X		02->	40210-00Q0E	**KCR21005**	
2.0 - dCi 100 - dCi 80	X		01->	40210-00Q0E	**KCR21005**	
2.0 -2.5 dCi 140	X		03->	40210-00Q0E	**KCR21005**	
2.0 dCi 90 - 2.0 dCi 115 - 2.5 dCi 150	X		06->	40210-00Q0E	**KCR21005**	
dCi 140	X		03->	40210-00Q0E	**KCR21005**	
dCi 90 - dCi 120 - dCi 150	X		06->	40210-00Q0E	**KCR21005**	
PULSAR 2 volumi						
1.2 DIG-T - 1.5 dCi	X		14->	40202-1KA0A	**KMR21301**	SI ABS
1.6 DIG-T	X		15->	40202-1KA0A	**KMR21301**	SI ABS
QASHQAI / QASHQAI +2 I						
1.5 dCi - 1.6 - 2.0 - 2.0 dCi		X	lug-13	43202-4BA0A	**KMR21302**	SI ABS
1.5 dCi - 1.6 - 2.0 - 2.0 Trazione integrale	X		lug-13	40202-1KA0A	**KMR21301**	SI ABS
1.6 dCi		X	nov-13	43202-4BA0A	**KMR21302**	SI ABS
1.6 dCi - 1.6 dCi Trazione integrale	X		nov-13	40202-1KA0A	**KMR21301**	SI ABS
2.0 dCi - 2.0 dCi Trazione integrale	X		lug-13	40202-1KA0A	**KMR21301**	SI ABS
X-TRAIL						
1.3 DIG-T - 1.7 dCi		X	19->	43202-4BA0A	**KMR21302**	SI ABS
1.6 dCi		X	14->	43202-4BA0A	**KMR21302**	SI ABS
1.6 DIG-T		X	15->	43202-4BA0A	**KMR21302**	SI ABS
2.0 4x4 - 2.0 FWD - 2.0 dCi - 2.0 dCi 4x4 - 2.5 4x4	X		lug-13	40202-1KA0A	**KMR21301**	SI ABS
2.0 4x4 - 2.0 FWD - 2.0 dCi 4x4 - 2.5 4x4		X	lug-13	43202-4BA0A	**KMR21302**	SI ABS
2.0 dCi		X	07->	43202-4BA0A	**KMR21302**	SI ABS

OPEL

MODELLO MODEL	ASS.ANT. FRONT AXLE	ASS.POS. REAR AXLE	ANNO YEAR	RIF ORIGINALE ORIGINAL REF	RIF CORAM CORAM REF	NOTE NOTES
ADAM						
1.0	X		14-18	1587565	**KCR12001**	SI ABS
1.0	X		14-18	1603337	**KCR20001**	SI ABS
1.2 - 1.4	X		dic-19	1587565	**KCR12001**	SI ABS
1.2 - 1.4	X		dic-19	1603337	**KCR20001**	SI ABS
1.4 LPG	X		13-18	1587565	**KCR12001**	SI ABS
1.4 LPG	X		13-18	1603337	**KCR20001**	SI ABS
1.4 S	X		14-19	1587565	**KCR12001**	SI ABS
AGILA						
1.0		X	03-lug	4700322	**KCR20002**	
1.0 - 1.3 CDTi		X	03-lug	4700323	**KCR20003**	
1.0 12V - 1.2 16V		X	00-07	4700323	**KCR20003**	
1.0 12V - 1.2 16V		X	00-07	4700322	**KCR20002**	
1.2 16V Twinport		X	04-lug	4700322	**KCR20002**	
1.2 16V Twinport		X	04-lug	4700323	**KCR20003**	
ASCONA B						
1.2	X		76-79	11054489	**KCR21007**	
1.2 S	X		75-79	11054489	**KCR21007**	
1.3 N - 1.3 S - 2.0 E	X		79-81	11054489	**KCR21007**	
1.6 N - 1.6 S - 1.9 S	X		75-81	11054489	**KCR21007**	
1.9 N	X		76-81	11054489	**KCR21007**	
2.0 D	X		78-81	11054489	**KCR21007**	
2.0 N . 2.0 S	X		77-81	11054489	**KCR21007**	
ASCONA C						
1.3 N		X	81-86	11054489	**KCR21007**	
1.3 S - 1.6		X	81-88	11054489	**KCR21007**	
1.6 D		X	82-88	11054489	**KCR21007**	
1.6 i - 1.8 - 2.0 i GT		X	87-88	11054489	**KCR21007**	
1.6 i Cat - 2.0 i - 2.0 i Cat		X	86-88	11054489	**KCR21007**	
1.6 S		X	81-86	11054489	**KCR21007**	
1.8 E		X	85-86	11054489	**KCR21007**	
1.8 i		X	82-86	11054489	**KCR21007**	

follow OPEL

MODELLO MODEL	ASS.ANT. FRONT AXLE	ASS.POS. REAR AXLE	ANNO YEAR	RIF ORIGINALE ORIGINAL REF	RIF CORAM CORAM REF	NOTE NOTES
ASCONA C 2 volumi						
1.3 N		X	81-86	11054489	**KCR21007**	
1.3 S - 1.6		X	81-88	11054489	**KCR21007**	
1.6 D		X	82-88	11054489	**KCR21007**	
1.6 i - 1.8 - 2.0 i GT		X	87-88	11054489	**KCR21007**	
1.6 i Cat - 2.0 i - 2.0 i Cat		X	86-88	11054489	**KCR21007**	
1.6 S		X	81-86	11054489	**KCR21007**	
1.8 E		X	85-86	11054489	**KCR21007**	
1.8 i		X	82-86	11054489	**KCR21007**	
ASTRA G 2 volumi						
1.2 16V - 1.4 16V - 1.6 - 1.6 16V	X		98-05	13123486	**KMR20003**	SI ABS
1.7 CDTI	X		03-mag	13123486	**KMR20003**	SI ABS
1.7 DTI 16V	X		00-05	13123486	**KMR20003**	SI ABS
1.7 TD	X		98-00	13123486	**KMR20003**	SI ABS
1.8 16V - 2.0 16V - 2.0 DI	X		98-05	13123488	**KMR20004**	SI ABS
1.8 16V - 2.0 16V - 2.0 DI		X	98-05	1604002	**KMR20002**	SI ABS
2.0 16V OPC	X		99-02	13123488	**KMR20004**	SI ABS
2.0 16V OPC		X	99-02	1604002	**KMR20002**	SI ABS
2.0 DTI 16V	X		99-05	13123488	**KMR20004**	SI ABS
2.0 DTI 16V		X	99-05	1604002	**KMR20002**	SI ABS
2.0 OPC - 2.2 DTI	X		02-mag	13123488	**KMR20004**	SI ABS
2.0 OPC - 2.2 DTI		X	02-mag	1604002	**KMR20002**	SI ABS
2.2 16V	X		00-05	13123488	**KMR20004**	SI ABS
2.2 16V		X	00-05	1604002	**KMR20002**	SI ABS
ASTRA G Cabriolet						
1.6	X		03-mag	13123486	**KMR20003**	SI ABS
1.6 16V	X		01-mag	13123486	**KMR20003**	SI ABS
1.8 16V - 2.2 16V		X	01-mag	1604002	**KMR20002**	SI ABS
1.8 16V - 2.2 16V - 2.2 DTI	X		01-mag	13123488	**KMR20004**	SI ABS
2.0 16V Turbo - 2.0 OPC	X		02-mag	13123488	**KMR20004**	SI ABS
2.0 16V Turbo - 2.0 OPC - 2.2 DTI		X	02-mag	1604002	**KMR20002**	SI ABS

follow OPEL

MODELLO MODEL	ASS.ANT. FRONT AXLE	ASS.POS. REAR AXLE	ANNO YEAR	RIF ORIGINALE ORIGINAL REF	RIF CORAM CORAM REF	NOTE NOTES
ASTRA G Cassone						
1.4	X		98-05	13123488	**KMR20004**	SI ABS
1.4		X	98-05	1604002	**KMR20002**	SI ABS
1.6		X	98-04	1604002	**KMR20002**	SI ABS
1.6 - 1.7 CDTI	X		98-04	13123488	**KMR20004**	SI ABS
1.6 - 1.7 TD	X		99-05	13123486	**KMR20003**	SI ABS
1.7 CDTI		X	03-apr	1604002	**KMR20002**	SI ABS
1.7 DTI 16V	X		00-05	13123486	**KMR20003**	SI ABS
2.0 DI	X		99-05	13123488	**KMR20004**	SI ABS
2.0 DI		X	99-05	1604002	**KMR20002**	SI ABS
2.0 DTI	X		00-05	13123488	**KMR20004**	SI ABS
2.0 DTI		X	00-05	1604002	**KMR20002**	SI ABS
ASTRA G CLASSIC						
1.4 16V - 1.7 CDTI	X		04-set	13123486	**KMR20003**	SI ABS
1.6	X		06-ago	13123486	**KMR20003**	SI ABS
1.6 16V	X		04-giu	13123486	**KMR20003**	SI ABS
ASTRA G CLASSIC Caravan						
1.4 16V	X		04-lug	13123486	**KMR20003**	SI ABS
1.6 - 1.7 CDTI	X		04-set	13123486	**KMR20003**	SI ABS
ASTRA G CLASSIC Tre volumi						
1.4 16V	X		04-set	13123486	**KMR20003**	SI ABS
1.6 16V	X		04-ago	13123486	**KMR20003**	SI ABS
ASTRA G coupé						
1.6 16V	X		00-05	13123486	**KMR20003**	SI ABS
1.8 16V - 2.0 16V Turbo - 2.2 16V	X		00-05	13123488	**KMR20004**	SI ABS
1.8 16V - 2.0 16V Turbo - 2.2 16V		X	00-05	1604002	**KMR20002**	SI ABS
2.2 DTI	X		02-mag	13123488	**KMR20004**	SI ABS
2.2 DTI		X	02-mag	1604002	**KMR20002**	SI ABS

follow OPEL

MODELLO MODEL	ASS.ANT. FRONT AXLE	ASS.POS. REAR AXLE	ANNO YEAR	RIF ORIGINALE ORIGINAL REF	RIF CORAM CORAM REF	NOTE NOTES
ASTRA G Station wagon						
1.2 16V - 1.4 16V - 1.6 - 1.6 16V	X		98-04	13123486	**KMR20003**	SI ABS
1.6 CNG - 1.7 CDTI	X		03-apr	13123486	**KMR20003**	SI ABS
1.7 DTI 16V	X		00-04	13123486	**KMR20003**	SI ABS
1.7 TD	X		98-00	13123486	**KMR20003**	SI ABS
1.8 16V - 2.0 16V - 2.0 DI	X		98-04	13123488	**KMR20004**	SI ABS
1.8 16V - 2.0 16V - 2.0 DI		X	98-05	1604002	**KMR20002**	SI ABS
2.0 DTI 16V	X		99-04	13123488	**KMR20004**	SI ABS
2.0 DTI 16V		X	99-04	1604002	**KMR20002**	SI ABS
2.0 OPC - 2.2 DTI	X		02-apr	13123488	**KMR20004**	SI ABS
2.0 OPC - 2.2 DTI		X	02-apr	1604002	**KMR20002**	SI ABS
2.2 16V	X		01-apr	13123488	**KMR20004**	SI ABS
2.2 16V		X	01-apr	1604002	**KMR20002**	SI ABS
ASTRA G Tre volumi						
1.2 16V - 1.4 16V - 1.6 16V	X		98-05	13123486	**KMR20003**	SI ABS
1.4	X		07-set	13123486	**KMR20003**	SI ABS
1.6	X		98-09	13123486	**KMR20003**	SI ABS
1.6 LPG	X		02-mag	13123486	**KMR20003**	SI ABS
1.7 CDTI	X		03-set	13123486	**KMR20003**	SI ABS
1.7 DTI 16V	X		00-05	13123486	**KMR20003**	SI ABS
1.7 TD	X		98-00	13123486	**KMR20003**	SI ABS
1.8 16V - 2.0 16V - 2.0 DI	X		98-05	13123488	**KMR20004**	SI ABS
1.8 16V - 2.0 16V - 2.0 DI		X	98-05	1604002	**KMR20002**	SI ABS
2.0 DTI 16V	X		99-05	13123488	**KMR20004**	SI ABS
2.0 DTI 16V		X	99-05	1604002	**KMR20002**	SI ABS
2.2 16V	X		01-mag	13123488	**KMR20004**	SI ABS
2.2 16V		X	01-mag	1604002	**KMR20002**	SI ABS
2.2 DTI	X		02-mag	13123488	**KMR20004**	SI ABS
2.2 DTI		X	02-mag	1604002	**KMR20002**	SI ABS
ASTRA H						
1.2 - 1.3 CDTI		X	05-ott	1604316	**KMR20006**	SI ABS
1.3 CDTI	X		05-ott	13110964	**KMR20001**	SI ABS
1.4 - 1.6 - 1.7 CDTI - 1.8 - 1.9 CDTI - 1.9 CDTI 16V - 2.0 Turbo		X	04-ott	1604316	**KMR20006**	SI ABS
1.4 - 1.6 - 1.7 CDTI - 1.8 - 1.9 CDTI - 2.0 Turbo	X		04-ott	13110964	**KMR20001**	SI ABS
1.4 LPG	X		09-ott	13110964	**KMR20001**	SI ABS
1.4 LPG		X	09-ott	1604316	**KMR20006**	SI ABS
1.6 Turbo	X		07-ott	13110964	**KMR20001**	SI ABS
1.6 Turbo		X	07-ott	1604316	**KMR20006**	SI ABS
1.7 CDTI	X		lug-14	1603841	**KMR20007**	SI ABS
1.9 CDTI - 1.9 CDTI 16V - 2.0 Turbo	X		04-ott	1603841	**KMR20007**	SI ABS

follow OPEL

MODELLO MODEL	ASS.ANT. FRONT AXLE	ASS.POS. REAR AXLE	ANNO YEAR	RIF ORIGINALE ORIGINAL REF	RIF CORAM CORAM REF	NOTE NOTES
ASTRA H Cassone						
1.3 CDTI	X		05-ott	13110964	**KMR20001**	SI ABS
1.3 CDTI		X	05-ott	1604316	**KMR20006**	SI ABS
1.4 EcoTec	X		04-dic	13110964	**KMR20001**	SI ABS
1.4 EcoTec		X	04-dic	1604316	**KMR20006**	SI ABS
1.6 EcoTec	X		06-ott	13110964	**KMR20001**	SI ABS
1.6 EcoTec		X	06-ott	1604316	**KMR20006**	SI ABS
1.7 CDTI	X		04-ott	13110964	**KMR20001**	SI ABS
1.7 CDTI	X		07-ott	1603841	**KMR20007**	SI ABS
1.7 CDTI - 1.9 CDTI - 1.9 CDTI 16V		X	04-ott	1604316	**KMR20006**	SI ABS
1.9 CDTI	X		05-ott	1603841	**KMR20007**	SI ABS
1.9 CDTI 16V	X		04-ott	1603841	**KMR20007**	SI ABS
ASTRA H CLASSIC 2 volumi						
1.3 CDTI - 1.4 - 1.6 - 1.7 CDTI	X		09->	13110964	**KMR20001**	SI ABS
1.3 CDTI - 1.4 - 1.6 - 1.7 CDTI		X	09->	1604316	**KMR20006**	SI ABS
1.7 CDTI	X		09->	1603841	**KMR20007**	SI ABS
1.8	X		13->	13110964	**KMR20001**	SI ABS
1.8		X	13->	1604316	**KMR20006**	SI ABS
ASTRA H CLASSIC Station wagon						
1.4 - 1.7 CDTI	X		09->	13110964	**KMR20001**	SI ABS
1.4 - 1.7 CDTI		X	09->	1604316	**KMR20006**	SI ABS
1.6	X		giu-14	13110964	**KMR20001**	SI ABS
1.6		X	giu-14	1604316	**KMR20006**	SI ABS
1.7 CDTI - 1.7 CDTi	X		09->	1603841	**KMR20007**	SI ABS
1.8	X		dic-15	13110964	**KMR20001**	SI ABS
1.8		X	dic-15	1604316	**KMR20006**	SI ABS
ASTRA H CLASSIC Tre volumi						
1.6		X	set-14	1604316	**KMR20006**	SI ABS
1.7 CDTI	X		09->	13110964	**KMR20001**	SI ABS
1.7 CDTI		X	09->	1604316	**KMR20006**	SI ABS
1.7 CDTI - 1.7 CDTi	X		09->	1603841	**KMR20007**	SI ABS
1.8	X		07-dic	13110964	**KMR20001**	SI ABS
1.8		X	07-dic	1604316	**KMR20006**	SI ABS

follow OPEL

MODELLO MODEL	ASS.ANT. FRONT AXLE	ASS.POS. REAR AXLE	ANNO YEAR	RIF ORIGINALE ORIGINAL REF	RIF CORAM CORAM REF	NOTE NOTES
ASTRA H GTC						
1.3 CDTI - 1.4 - 1.6 - 1.7 CDTI -1.8		X	05-ott	1604316	**KMR20006**	SI ABS
1.3 CDTI - 1.4 - 1.6 - 1.7 CDTI -1.8 - 1.9 CDTI - 2.0 Turbo	X		05-ott	13110964	**KMR20001**	SI ABS
1.6 Turbo	X		07-ott	13110964	**KMR20001**	SI ABS
1.6 Turbo		X	07-ott	1604316	**KMR20006**	SI ABS
1.7 CDTI	X		07-ott	1603841	**KMR20007**	SI ABS
1.9 CDTI - 1.9 CDTI 16V - 2.0 Turbo	X		05-ott	1603841	**KMR20007**	SI ABS
1.9 CDTI - 1.9 CDTI 16V - 2.0 Turbo		X	05-ott	1604316	**KMR20006**	SI ABS
ASTRA H Station wagon						
1.3 CDTI	X		05-ott	13110964	**KMR20001**	SI ABS
1.3 CDTI		X	05-ott	1604316	**KMR20006**	SI ABS
1.4 - 1.6 - 1.7 CDTI - 1.9 CDTI - 1.9 CDTI 16V - 2.0 Turbo		X	04-ott	1604316	**KMR20006**	SI ABS
1.4 - 1.7 CDTI - 1.9 CDTI - 2.0 Turbo	X		04-ott	13110964	**KMR20001**	SI ABS
1.4 LPG - 1.6 LPG	X		09-ott	13110965	**KMR20002**	SI ABS
1.4 LPG - 1.6 LPG		X	09-ott	1604316	**KMR20006**	SI ABS
1.6	X		apr-14	13110964	**KMR20001**	SI ABS
1.6 LPG		X	09-ott	1604316	**KMR20006**	SI ABS
1.6 Turbo	X		07-ott	13110964	**KMR20001**	SI ABS
1.6 Turbo		X	07-ott	1604316	**KMR20006**	SI ABS
1.7 CDTI	X		lug-14	1603841	**KMR20007**	SI ABS
1.8	X		mag-14	13110964	**KMR20001**	SI ABS
1.8		X	apr-14	1604316	**KMR20006**	SI ABS
1.9 CDTI	X		05-ott	1603841	**KMR20007**	SI ABS
1.9 CDTI 16V - 2.0 Turbo	X		04-ott	1603841	**KMR20007**	SI ABS
ASTRA H Tre volumi						
1.3 CDTI - 1.4		X	07-ott	1604316	**KMR20006**	SI ABS
1.4	X		07-ott	13110964	**KMR20001**	SI ABS
1.6 - 1.7 CDTi		X	lug-14	1604316	**KMR20006**	SI ABS
1.7 CDTi	X		lug-14	13110964	**KMR20001**	SI ABS
1.8	X		07-dic	13110964	**KMR20001**	SI ABS
1.8		X	07-dic	1604316	**KMR20006**	SI ABS
ASTRA H TwinTop						
1.6 - 1.8 - 1.9 CDTi - 2.0 Turbo		X	07-dic	1604316	**KMR20006**	SI ABS
1.6 - 1.8 - 2.0 Turbo	X		05-ott	13110964	**KMR20001**	SI ABS
1.6 Turbo	X		07-ott	13110964	**KMR20001**	SI ABS
1.6 Turbo		X	07-ott	1604316	**KMR20006**	SI ABS
2.0 Turbo	X		05-ott	1603841	**KMR20007**	SI ABS

follow OPEL

MODELLO MODEL	ASS.ANT. FRONT AXLE	ASS.POS. REAR AXLE	ANNO YEAR	RIF ORIGINALE ORIGINAL REF	RIF CORAM CORAM REF	NOTE NOTES
ASTRA J						
1.3 CDTI - 1.4 - 1.4 Turbo - 1.6	X		set-15	13502829	**KMR20009**	SI ABS
1.4 LPG - 1.6 SIDI - 2.0 BiTurbo CDTI	X		dic-15	13502829	**KMR20009**	SI ABS
1.6 CDTi	X		13-15	13502829	**KMR20009**	SI ABS
1.6 Turbo - 1.6 Turbo 4x4 - 1.7 CDTI - 2.0 CDTI	X		set-15	13502829	**KMR20009**	SI ABS
ASTRA J Cassone						
1.6 CDTi	X		14-15	13502829	**KMR20009**	SI ABS
1.7 CDTi	X		dic-15	13502829	**KMR20009**	SI ABS
ASTRA J GTC						
1.4 - 1.7 CDTI - 1.8 - 2.0 CDTI	X		nov-15	13502829	**KMR20009**	SI ABS
1.6	X		11->	13502829	**KMR20009**	SI ABS
1.6 CDTI	X		14->	13502829	**KMR20009**	SI ABS
1.6 SIDI - 2.0	X		12->	13502829	**KMR20009**	SI ABS
2.0 BiTurbo CDTI	X		dic-15	13502829	**KMR20009**	SI ABS
ASTRA J Sport Tourer						
1.3 CDTI	X		ott-14	13502829	**KMR20009**	SI ABS
1.4 - 1.4 Turbo - 1.6 - 1.6 Turbo - 1.7 CDTI - 2.0 CDTI	X		ott-15	13502829	**KMR20009**	SI ABS
1.4 LPG	X		nov-15	13502829	**KMR20009**	SI ABS
1.6 CDTi	X		13-15	13502829	**KMR20009**	SI ABS
1.6 SIDI - 2.0 BiTurbo CDTI	X		dic-15	13502829	**KMR20009**	SI ABS
ASTRA J Tre volumi						
1.3 CDTI - 1.4 - 1.4 Turbo - 1.7 CDTI	X		dic-15	13502829	**KMR20009**	SI ABS
1.4 LPG - 1.6 CDTi	X		14->	13502829	**KMR20009**	SI ABS
1.6 - 1.6 Turbo	X		12->	13502829	**KMR20009**	SI ABS
1.6 SIDI	X		dic-16	13502829	**KMR20009**	SI ABS
CASCADA						
1.4 - 1.4 Turbo - 1.6 - 2.0 CDTI	X		13-18	13502829	**KMR20009**	SI ABS
1.6 SIDI	X		13-19	13502829	**KMR20009**	SI ABS

follow OPEL

MODELLO MODEL	ASS.ANT. FRONT AXLE	ASS.POS. REAR AXLE	ANNO YEAR	RIF ORIGINALE ORIGINAL REF	RIF CORAM CORAM REF	NOTE NOTES
COMBO Cassone						
1.3 CDTI - 1.4 - 1.6 CDTI	X		12->	328011	**KCR12004**	SI ABS
1.3 CDTI 16V	X		05-dic	328980	**KCR20004**	
1.4 - 1.4 CNG - 1.6 CDTI - 2.0 CDTI	X		12->	328012	**KCR12010**	SI ABS
1.4 16V	X		05->	328980	**KCR20004**	
1.6 - 1.6 CNG 16V	X		05->	328980	**KCR20004**	
1.7 CDTI 16V		X	04->	1604002	**KMR20002**	SI ABS
1.7 DI 16V - 1.7 DTI 16V	X		01->	328980	**KCR20004**	
COMBO Combi						
1.3 CDTI - 1.4 - 1.6 CDTI	X		12->	328011	**KCR12004**	SI ABS
1.4 - 1.4 CNG - 1.6 CDTI - 2.0 CDTI	X		12->	328012	**KCR12010**	SI ABS
COMBO Tour						
1.3 CDTI 16V - 1.4	X		04-nov	328980	**KCR20004**	
1.6	X		01-giu	328980	**KCR20004**	
1.6 CNG	X		05-nov	328980	**KCR20004**	
1.7 CDTI 16V		X	04-nov	1604002	**KMR20002**	SI ABS
1.7 DI 16V - 1.7 DTI 16V	X		01-apr	328980	**KCR20004**	
CORSA A 2 volumi						
1.0		X	82-93	11054489	**KCR21007**	
1.2 - 1.2 S		X	82-90	11054489	**KCR21007**	
1.2 i -		X	89-93	11054489	**KCR21007**	
1.2 N - 1.4 S - 1.4 i		X	90-93	11054489	**KCR21007**	
1.3		X	85-89	11054489	**KCR21007**	
1.3 i		X	86-90	11054489	**KCR21007**	
1.3 S		X	82-89	11054489	**KCR21007**	
1.4 Si		X	91-93	11054489	**KCR21007**	
1.5 D		X	87-93	11054489	**KCR21007**	
1.5 TD - 1.6 GSI		X	88-93	11054489	**KCR21007**	
1.6 GSI Cat		X	92-93	11054489	**KCR21007**	
CORSA A Furgonato						
1.0 - 1.3		X	86-89	11054489	**KCR21007**	
1.2		X	86-94	11054489	**KCR21007**	
1.5 D		X	87-89	11054489	**KCR21007**	

follow OPEL

MODELLO MODEL	ASS.ANT. FRONT AXLE	ASS.POS. REAR AXLE	ANNO YEAR	RIF ORIGINALE ORIGINAL REF	RIF CORAM CORAM REF	NOTE NOTES
CORSA A TR						
1.0		X	82-92	11054489	**KCR21007**	
1.2 i - 1.4 S - 1. 4i		X	89-93	11054489	**KCR21007**	
1.2 N - 1.3		X	85-87	11054489	**KCR21007**	
1.2 S		X	82-93	11054489	**KCR21007**	
1.3 S		X	82-87	11054489	**KCR21007**	
1.5		X	87-92	11054489	**KCR21007**	
1.5 TD		X	87-93	11054489	**KCR21007**	
CORSA B						
1.0 i 12V - 1. 7 D		X	96-00	11054489	**KCR21007**	
1.2 i - 1.4 Si - 1.4 i - 1.5 D - 1.5 TD - 1.6 GSI 16V		X	93-00	11054489	**KCR21007**	
1.2 i 16V		X	98-00	11054489	**KCR21007**	
1.4 i 16V - 1.6 i 16V		X	94-00	11054489	**KCR21007**	
CORSA B Furgonato						
1.4 i - 1.7 D		X	99-00	11054489	**KCR21007**	
CORSA B STATION WAGON						
1.4 i 16V - 1.7 D		X	99-02	11054489	**KCR21007**	
CORSA C						
1.0 - 1.2 - 1.4 - 1.7 DI - 1.7 DTI - 1.8	X		00-09	328980	**KCR20004**	
1.2 Twinport	X		04-set	328980	**KCR20004**	
1.3 CDTI - 1.4 Twinport	X		03-set	328980	**KCR20004**	
CORSA C Furgonato						
1.2 - 1.3 CDTI 16V	X		05-giu	328980	**KCR20004**	
1.2 16V - 1.7 DI 16V - 1.7 DTI 16V	X		00-03	328980	**KCR20004**	
1.4	X		03-dic	328980	**KCR20004**	
CORSA D						
1.0 -1.2 - 1.2 LPG - 1.4 - 1.4 LPG	X		giu-14	1603337	**KCR20001**	SI ABS
1.3 CDTi - 1.6 Turbo - 1.7 CDTI	X		giu-14	1587565	**KCR12001**	SI ABS
1.4	X		dic-14	1587565	**KCR12001**	SI ABS

follow OPEL

MODELLO MODEL	ASS.ANT. FRONT AXLE	ASS.POS. REAR AXLE	ANNO YEAR	RIF ORIGINALE ORIGINAL REF	RIF CORAM CORAM REF	NOTE NOTES
CORSA D Van						
1.0 - 1.2	X		giu-14	1603337	**KCR20001**	SI ABS
1.3 CDTI	X		giu-14	1587565	**KCR12001**	SI ABS
CORSA E						
1.0 - 1.2 - 1.4	X		14->	1603337	**KCR20001**	SI ABS
1.0 - 1.3 CDTI	X		14->	1587565	**KCR12001**	SI ABS
1.4 Turbo	X		14-19	1587565	**KCR12001**	SI ABS
1.5	X		15->	1603337	**KCR20001**	SI ABS
1.6 Turbo	X		15->	1587565	**KCR12001**	SI ABS
CORSA E Van						
1.2	X		15->	1603337	**KCR20001**	SI ABS
1.3 CDTI	X		14->	1587565	**KCR12001**	SI ABS
1.4	X		14->	1603337	**KCR20001**	SI ABS
CORSA F						
1.2 - 1.5 - CORSA-e	X		19->	3557914	**KCR10002**	SI ABS
CROSSLAND X						
1.2 - 1.2 LPG - 1.6 Turbo D	X		17->	3557914	**KCR10002**	SI ABS
1.5 Turbo D	X		18->	3557914	**KCR10002**	SI ABS
INSIGNIA A						
1.4		X	nov-17	13502785	**KMR20008**	SI ABS
1.4 LPG		X	dic-17	13502785	**KMR20008**	SI ABS
1.6 - 1.6 Turbo - 1.8 - 2.0 Biturbo CDTI - 2.0 CDTI		X	ago-17	13502785	**KMR20008**	SI ABS
1.6 CDTi		X	15-17	13502785	**KMR20008**	SI ABS
1.6 SIDI		X	13-17	13502785	**KMR20008**	SI ABS
2.0 Biturbo CDTI 4x4		X	set-17	13502785	**KMR20008**	SI ABS
2.0 CDTI 4x4 - 2.0 E85 Turbo		X	ott-17	13502785	**KMR20008**	SI ABS
2.0 Turbo - 2.0 Turbo 4x4 - 2.0 V6 Turbo 4x4		X		13502785	**KMR20008**	SI ABS
INSIGNIA A Country Tourer						
1.6 CDTi		X	15-17	13502785	**KMR20008**	SI ABS
1.6 SIDI		X	14-17	13502785	**KMR20008**	SI ABS
2.0 CDTi		X	ago-17	13502785	**KMR20008**	SI ABS
2.0 CDTi - 2.0 CDTi 4x4 - 2.0 Turbo 4x4		X	13-17	13502785	**KMR20008**	SI ABS

follow OPEL

MODELLO MODEL	ASS.ANT. FRONT AXLE	ASS.POS. REAR AXLE	ANNO YEAR	RIF ORIGINALE ORIGINAL REF	RIF CORAM CORAM REF	NOTE NOTES
INSIGNIA A Sport Tourer						
1.4		X	nov-13	13502785	**KMR20008**	SI ABS
1.4 LPG		X	dic-13	13502785	**KMR20008**	SI ABS
1.6		X	08-dic	13502785	**KMR20008**	SI ABS
1.6 CDTi		X	15-17	13502785	**KMR20008**	SI ABS
1.6 SIDI		X	13-14	13502785	**KMR20008**	SI ABS
1.6 Turbo		X	set-13	13502785	**KMR20008**	SI ABS
1.8 - 2.0 Turbo 4x4 - 2.8 V6 Turbo 4x4		X	ago-13	13502785	**KMR20008**	SI ABS
2.0 Biturbo CDTI - 2.0 Biturbo CDTI 4x4		X	ago-17	13502785	**KMR20008**	SI ABS
2.0 CDTI - 2.0 Turbo		X	ago-14	13502785	**KMR20008**	SI ABS
2.0 CDTI 4x4		X	ott-16	13502785	**KMR20008**	SI ABS
2.0 E85 Turbo		X	10-nov	13502785	**KMR20008**	SI ABS
2.8 V6 Turbo OPC 4x4		X	set-15	13502785	**KMR20008**	SI ABS
INSIGNIA A Tre volumi						
1.4		X	nov-17	13502785	**KMR20008**	SI ABS
1.4 LPG		X	dic-17	13502785	**KMR20008**	SI ABS
1.6 - 1.6 Turbo - 1.8 - 2.0 Biturbo CDTI - 2.0 Biturbo CDTI 4x4		X	ago-17	13502785	**KMR20008**	SI ABS
1.6 CDTi		X	15-17	13502785	**KMR20008**	SI ABS
1.6 SIDI		X	13-17	13502785	**KMR20008**	SI ABS
2.0 CDTI - 2.0 Turbo - 2.0 Turbo 4x4 - 2.0 Turbo E85		X	ago-17	13502785	**KMR20008**	SI ABS
2.0 CDTI 4x4		X	ott-17	13502785	**KMR20008**	SI ABS
2.8 V6 Turbo 4x4		X	ago-17	13502785	**KMR20008**	SI ABS
2.8 V6 Turbo OPC 4x4		X	set-17	13502785	**KMR20008**	SI ABS
KADETT C						
1.0	X		74-79	11054489	**KCR21007**	
1.2 - 1.2 S	X		73-79	11054489	**KCR21007**	
1.6 S	X		76-79	11054489	**KCR21007**	
KADETT C City						
1.0 - 1.2	X		75-79	11054489	**KCR21007**	
1.2 S	X		73-79	11054489	**KCR21007**	
1.6 S	X		77-79	11054489	**KCR21007**	
KADETT C Coupé						
1.0	X		74-79	11054489	**KCR21007**	
1.2 - 1.2 S	X		73-79	11054489	**KCR21007**	
1.6 S - 2.0 E Rallye - 2.0 GT/E	X		77-79	11054489	**KCR21007**	
1.9 GT/E	X		75-77	11054489	**KCR21007**	

follow OPEL

MODELLO MODEL	ASS.ANT. FRONT AXLE	ASS.POS. REAR AXLE	ANNO YEAR	RIF ORIGINALE ORIGINAL REF	RIF CORAM CORAM REF	NOTE NOTES
KADETT C Station wagon						
1.0	X		74-79	11054489	**KCR21007**	
1.2 - 1.2 S	X		73-79	11054489	**KCR21007**	
1.6 S	X		77-79	11054489	**KCR21007**	
KADETT D						
1.0		X	79-82	11054489	**KCR21007**	
1.2 - 1.2 S - 1.3 N - 1.3 S		X	79-84	11054489	**KCR21007**	
1.6 D		X	82-84	11054489	**KCR21007**	
1.6 S		X	81-84	11054489	**KCR21007**	
1.8 GT/E		X	83-84	11054489	**KCR21007**	
KADETT D Station wagon						
1.2		X	79-82	11054489	**KCR21007**	
1.2 S - 1.3 N - 1.3 S		X	79-84	11054489	**KCR21007**	
1.6 D		X	82-84	11054489	**KCR21007**	
1.6 S		X	81-84	11054489	**KCR21007**	
KADETT E						
1.2 - 1.8 i		X	84-86	11054489	**KCR21007**	
1.3 i Cat		X	85-91	11054489	**KCR21007**	
1.3 N - 1.6 D		X	84-89	11054489	**KCR21007**	
1.3 S		X	84-87	11054489	**KCR21007**	
1.4 S - 1.4 i		X	90-91	11054489	**KCR21007**	
1.5 TD		X	88-91	11054489	**KCR21007**	
1.6 S - 1.6 i		X	86-91	11054489	**KCR21007**	
1.7 D		X	89-91	11054489	**KCR21007**	
1.8		X	87-90	11054489	**KCR21007**	
1.8 i		X	89-92	11054489	**KCR21007**	
1.8 S		X	87-91	11054489	**KCR21007**	
2.0 i - 2.0 i Cat		X	87-92	11054489	**KCR21007**	

follow OPEL

MODELLO MODEL	ASS.ANT. FRONT AXLE	ASS.POS. REAR AXLE	ANNO YEAR	RIF ORIGINALE ORIGINAL REF	RIF CORAM CORAM REF	NOTE NOTES
KADETT E 2 volumi						
1.2 - 1.8 GSI		X	84-86	11054489	**KCR21007**	
1.3 i Cat - 1.8 i		X	85-91	11054489	**KCR21007**	
1.3 N		X	84-91	11054489	**KCR21007**	
1.3 S		X	84-87	11054489	**KCR21007**	
1.4 i		X	90-91	11054489	**KCR21007**	
1.4 i		X	90-91	11054489	**KCR21007**	
1.4 S		X	89-91	11054489	**KCR21007**	
1.4 S		X	90-93	11054489	**KCR21007**	
1.5 TD		X	88-91	11054489	**KCR21007**	
1.6 D		X	84-89	11054489	**KCR21007**	
1.6 i		X	86-93	11054489	**KCR21007**	
1.6 S - 1.6 i - 1.6 i Cat - 2.0 GSI - 2.0 GSI Cat		X	86-91	11054489	**KCR21007**	
1.7 D		X	89-91	11054489	**KCR21007**	
1.8 E		X	85-86	11054489	**KCR21007**	
1.8 i		X	89-92	11054489	**KCR21007**	
1.8 S - 2.0 GSI 16V		X	87-91	11054489	**KCR21007**	
2.0 - 2.0 GSI		X	90-92	11054489	**KCR21007**	
2.0 - 2.0 i Cat		X	86-93	11054489	**KCR21007**	
2.0 i - 2.0 i Cat		X	87-92	11054489	**KCR21007**	
KADETT E Cabriolet						
1.3 S - 1.6 i Cat		X	87-93	11054489	**KCR21007**	
KADETT E Furgonato						
1.2		X	84-86	11054489	**KCR21007**	
1.3 N		X	84-89	11054489	**KCR21007**	
1.4 i		X	90-91	11054489	**KCR21007**	
1.6 D		X	84-88	11054489	**KCR21007**	
1.6 i		X	89-93	11054489	**KCR21007**	
1.7 D		X	88-92	11054489	**KCR21007**	
1.8 i		X	84-92	11054489	**KCR21007**	

follow OPEL

MODELLO MODEL	ASS.ANT. FRONT AXLE	ASS.POS. REAR AXLE	ANNO YEAR	RIF ORIGINALE ORIGINAL REF	RIF CORAM CORAM REF	NOTE NOTES
KADETT E Station wagon						
1.2 - 1.8 i		X	84-86	11054489	**KCR21007**	
1.3 i Cat - 1.8 i		X	85-91	11054489	**KCR21007**	
1.3 N		X	84-91	11054489	**KCR21007**	
1.3 S		X	84-87	11054489	**KCR21007**	
1.4 S - 1.4 i		X	90-91	11054489	**KCR21007**	
1.5 TD		X	88-91	11054489	**KCR21007**	
1.6 - 1.6 i - 1.6 i Cat		X	86-91	11054489	**KCR21007**	
1.6 D		X	84-89	11054489	**KCR21007**	
1.7 D		X	89-91	11054489	**KCR21007**	
1.8 E		X	85-86	11054489	**KCR21007**	
1.8 S - 2.0 i - 2.0 i Cat		X	87-91	11054489	**KCR21007**	
MANTA B						
1.3 N	X		79-80	11054489	**KCR21007**	
1.3 S	X		81-86	11054489	**KCR21007**	
1.6 N	X		75-80	11054489	**KCR21007**	
1.6 S	X		75-81	11054489	**KCR21007**	
1.8 S	X		82-87	11054489	**KCR21007**	
1.9 E	X		75-77	11054489	**KCR21007**	
1.9 N	X		76-81	11054489	**KCR21007**	
2.0	X		77-80	11054489	**KCR21007**	
2.0 E	X		77-88	11054489	**KCR21007**	
2.0 S	X		77-84	11054489	**KCR21007**	
MANTA B CC						
1.3 N	X		79-80	11054489	**KCR21007**	
1.3 S	X		79-86	11054489	**KCR21007**	
1.6 N	X		75-80	11054489	**KCR21007**	
1.8 S	X		82-87	11054489	**KCR21007**	
1.9 N	X		76-81	11054489	**KCR21007**	
2.0	X		77-80	11054489	**KCR21007**	
2.0 E	X		77-88	11054489	**KCR21007**	
2.0 S	X		77-84	11054489	**KCR21007**	

follow OPEL

MODELLO MODEL	ASS.ANT. FRONT AXLE	ASS.POS. REAR AXLE	ANNO YEAR	RIF ORIGINALE ORIGINAL REF	RIF CORAM CORAM REF	NOTE NOTES
MERIVA A Space wagon						
1.3 CDTI - 1.6 - 1.7 CDTI - 1.7 DTI - 1.8		X	03-ott	1604002	**KMR20002**	SI ABS
1.3 CDTI - 1.6 - 1.7 DTI - 1.8	X		03-ott	328980	**KCR20004**	
1.4 16V Twinport - 1.4 Twinport LPG	X		04-ott	328980	**KCR20004**	
1.4 16V Twinport - 1.4 Twinport LPG		X	04-ott	1604002	**KMR20002**	SI ABS
1.6 16V	X		03-giu	328980	**KCR20004**	
1.6 16V		X	04-ott	1604002	**KMR20002**	SI ABS
1.6 Turbo		X	05-ott	1604002	**KMR20002**	SI ABS
MERIVA B Space wagon						
1.3 CDTI		X	ott-14	1604316	**KMR20006**	SI ABS
1.4 - 1.7 CDTI		X	ott-17	1604316	**KMR20006**	SI ABS
1.4 LPG		X	nov-17	1604316	**KMR20006**	SI ABS
1.6 CDTI		X	14-17	1604316	**KMR20006**	SI ABS
1.6 CDTi		X	13-17	1604316	**KMR20006**	SI ABS
MOVANO B Autobus						
2.3 CDTI FWD	X		10->	4419183	**KCR21303**	
MOVANO B Furgonato						
2.3 CDTI FWD - 2.3 CDTI RWD	X		10->	4419183	**KCR21303**	
MOVANO B Pianale piatto						
2.3 CDTI FWD - 2.3 CDTI RWD	X		10->	4419183	**KCR21303**	
MOVANO B Ribaltabile						
2.3 CDTI FWD - 2.3 CDTI RWD	X		10->	4419183	**KCR21303**	
MOVANO Combi						
1.9 DTI - 2.2 DTI		X	00->	4303044	**KCR20005**	
2.5 CDTI		X	06->	4303044	**KCR20005**	
2.5 D - 2.8 DTI		X	98-00	4303044	**KCR20005**	
2.5 DTI		X	01->	4303044	**KCR20005**	
3.0 DTi		X	03->	4303044	**KCR20005**	

follow OPEL

MODELLO MODEL	ASS.ANT. FRONT AXLE	ASS.POS. REAR AXLE	ANNO YEAR	RIF ORIGINALE ORIGINAL REF	RIF CORAM CORAM REF	NOTE NOTES
MOVANO Furgonato						
1.9 DTI - 2.2 DTI		X	00->	4303044	**KCR20005**	
2.2 DTI	X		00->	4403023	**KCR20006**	
2.5 CDTI - 2.5 DTi - 3.0 DTI	X		03->	4403023	**KCR20006**	
2.5 CDTI - 2.5 DTi - 3.0 DTI		X	03->	4303044	**KCR20005**	
2.5 D	X		99-00	4403023	**KCR20006**	
2.5 D		X	99-00	4303044	**KCR20005**	
2.5 DTI	X		01->	4403023	**KCR20006**	
2.5 DTI		X	01->	4303044	**KCR20005**	
2.8 DTI	X		99-01	4403023	**KCR20006**	
2.8 DTI		X	99-01	4303044	**KCR20005**	
MOVANO Pianale piatto						
2.2 DTI	X		00->	4403023	**KCR20006**	
2.2 DTI		X	00->	4303044	**KCR20005**	
2.5 CDTI		X	06->	4303044	**KCR20005**	
2.5 CDTI - 2.5 DTi - 3.0 DTI	X		03->	4403023	**KCR20006**	
2.5 D	X		99-00	4403023	**KCR20006**	
2.5 D		X	98-00	4303044	**KCR20005**	
2.5 DTI	X		01->	4403023	**KCR20006**	
2.5 DTI		X	01->	4303044	**KCR20005**	
2.5 DTi - 3.0 DTI		X	03->	4303044	**KCR20005**	
2.8 DTI	X		98-01	4403023	**KCR20006**	
2.8 DTI		X	98-01	4303044	**KCR20005**	
MOVANO Ribaltabile						
2.2 DTI	X		00->	4403023	**KCR20006**	
2.2 DTI		X	00->	4303044	**KCR20005**	
2.5 CDTI	X		06->	4403023	**KCR20006**	
2.5 CDTI		X	06->	4303044	**KCR20005**	
2.5 D	X		99-00	4403023	**KCR20006**	
2.5 D		X	99-00	4303044	**KCR20005**	
2.5 DTI	X		01->	4403023	**KCR20006**	
2.5 DTI - 3.0 DTI		X	03->	4303044	**KCR20005**	
2.8 DTI	X		98-01	4403023	**KCR20006**	
2.8 DTI		X	99-01	4303044	**KCR20005**	
3.0 DTI	X		03->	4403023	**KCR20006**	

follow OPEL

MODELLO MODEL	ASS.ANT. FRONT AXLE	ASS.POS. REAR AXLE	ANNO YEAR	RIF ORIGINALE ORIGINAL REF	RIF CORAM CORAM REF	NOTE NOTES
REKORD D						
1.7 - 2.1 D	X		72-77	11054489	**KCR21007**	
1.7 S - 1.9 S	X		72-75	11054489	**KCR21007**	
1.9 -2.0	X		75-77	11054489	**KCR21007**	
2.0 D	X		74-77	11054489	**KCR21007**	
REKORD D Coupé						
1.7 S -1.9 S	X		72-75	11054489	**KCR21007**	
1.9 - 2.0	X		75-77	11054489	**KCR21007**	
REKORD D Station wagon						
1.7 - 2.1 D	X		72-77	11054489	**KCR21007**	
1.7 S - 1.9 S	X		72-75	11054489	**KCR21007**	
1.9 -2.0	X		75-77	11054489	**KCR21007**	
2.0 D	X		74-77	11054489	**KCR21007**	
REKORD E						
1.7 - 1.9 - 2.0	X		77-82	11054489	**KCR21007**	
1.8 - 1.8 S	X		82-86	11054489	**KCR21007**	
1.8 E	X		85-86	11054489	**KCR21007**	
2.0 E	X		77-84	11054489	**KCR21007**	
2.0 S	X		77-86	11054489	**KCR21007**	
2.2 E	X		84-86	11054489	**KCR21007**	
REKORD E Station wagon						
1.7 - 1.9 - 2.0	X		77-82	11054489	**KCR21007**	
1.8 - 1.8 S	X		82-86	11054489	**KCR21007**	
1.8 E	X		85-86	11054489	**KCR21007**	
2.0 E	X		77-84	11054489	**KCR21007**	
2.0 S	X		77-86	11054489	**KCR21007**	
2.2 E	X		84-86	11054489	**KCR21007**	

follow OPEL

MODELLO MODEL	ASS.ANT. FRONT AXLE	ASS.POS. REAR AXLE	ANNO YEAR	RIF ORIGINALE ORIGINAL REF	RIF CORAM CORAM REF	NOTE NOTES
SIGNUM 2 volumi						
1.8 - 2.0 Turbo - 2.2 direct - 3.0 V6 CDTI		X	03-ago	1604314	**KMR20005**	SI ABS
1.8 - 3.0 V6 CDTI - 3.2 V6	X		03-mag	1603143	**KMR12006**	SI ABS
1.9 CDTI	X		04-ago	1603143	**KMR12006**	SI ABS
1.9 CDTI		X	04-ago	1604314	**KMR20005**	SI ABS
2.0 DTI - 2.2 DTI	X		03-apr	1603143	**KMR12006**	SI ABS
2.0 DTI - 2.2 DTI		X	03-apr	1604314	**KMR20005**	SI ABS
2.0 Turbo - 2.2 direct	X		03-ago	1603143	**KMR12006**	SI ABS
2.8 V6 Turbo		X	05-ago	1604314	**KMR20005**	SI ABS
3.2 V6		X	03-mag	1604314	**KMR20005**	SI ABS
TIGRA						
1.4 16V		X	94-00	11054489	**KCR21007**	
1.6 16V		X	94-98	11054489	**KCR21007**	
TIGRA TwinTop						
1.3 CDTI - 1.4 - 1.8	X		04-ott	328980	**KCR20004**	
VECTRA A						
1.4 S - 2.0 i		X	88-92	11054489	**KCR21007**	
1.6		X	88-93	11054489	**KCR21007**	
1.6 i - 1.7 D - 2.0 i Cat		X	88-95	11054489	**KCR21007**	
1.7 TD - 1.8 i Cat		X	90-95	11054489	**KCR21007**	
1.8 S		X	88-90	11054489	**KCR21007**	
2.5 V6		X	93-95	1604002	**KMR20002**	SI ABS
VECTRA A 2 volumi						
1.4 S		X	88-92	11054489	**KCR21007**	
1.6 i Cat - 1.7 D - 2.0 i Cat - 2.0 i GT		X	88-95	11054489	**KCR21007**	
1.6 S		X	88-93	11054489	**KCR21007**	
1.7 TD - 1.8 i Cat		X	90-95	11054489	**KCR21007**	
1.8 i		X	88-90	11054489	**KCR21007**	
1.8 S		X	88-89	11054489	**KCR21007**	
2.5 V6		X	93-95	1604002	**KMR20002**	SI ABS

follow OPEL

MODELLO MODEL	ASS.ANT. FRONT AXLE	ASS.POS. REAR AXLE	ANNO YEAR	RIF ORIGINALE ORIGINAL REF	RIF CORAM CORAM REF	NOTE NOTES
VECTRA B						
1.6 i - 1.6 i 16V - 1.8 i 16V		X	95-02	1604002	**KMR20002**	SI ABS
2.0 DI 16V		X	96-02	1604002	**KMR20002**	SI ABS
2.0 DTI 16V		X	97-02	1604002	**KMR20002**	SI ABS
2.0 i 16V - 2.5 i V6		X	95-00	1604002	**KMR20002**	SI ABS
2.2 DTI 16V - 2.2 i 16V - 2.6 i V6		X	00-02	1604002	**KMR20002**	SI ABS
i 500 2.5		X	98-00	1604002	**KMR20002**	SI ABS
VECTRA B 2 volumi						
1.6 i - 1.6 i 16V - 1.8 i 16V		X	95-02	1604002	**KMR20002**	SI ABS
1.8 i FlexFuel		X	99-00	1604002	**KMR20002**	SI ABS
2.0 DI 16V		X	96-00	1604002	**KMR20002**	SI ABS
2.0 DTI 16V		X	97-03	1604002	**KMR20002**	SI ABS
2.0 i 16V		X	95-03	1604002	**KMR20002**	SI ABS
2.2 DTI 16V - 2.2 i 16V - 2.6 i V6		X	00-03	1604002	**KMR20002**	SI ABS
2.5 i V6		X	95-00	1604002	**KMR20002**	SI ABS
VECTRA B Station wagon						
1.6 i - 2.0 DI 16V - 2.5 i V6		X	96-00	1604002	**KMR20002**	SI ABS
1.6 i 16V		X	96-02	1604002	**KMR20002**	SI ABS
1.8 i 16V - 2.0 i 16V		X	96-03	1604002	**KMR20002**	SI ABS
2.0 DTI 16V		X	97-03	1604002	**KMR20002**	SI ABS
2.2 DTI 16V - 2.2 i 16V - 2.6 i V6		X	00-03	1604002	**KMR20002**	SI ABS
i 500 2.5		X	98-00	1604002	**KMR20002**	SI ABS
VECTRA C						
1.6 - 2.8 V6 Turbo - 3.0 CDTi		X	05-ago	1604314	**KMR20005**	SI ABS
1.6 16V	X		04-mag	1603143	**KMR12006**	SI ABS
1.6 16V		X	04-mag	1604314	**KMR20005**	SI ABS
1.8 - 1.8 16V - 2.2 16V	X		02-ago	1603143	**KMR12006**	SI ABS
1.8 - 1.8 16V - 2.2 16V		X	02-ago	1604314	**KMR20005**	SI ABS
1.9 CDTI	X		04-set	1603143	**KMR12006**	SI ABS
1.9 CDTI		X	04-set	1604314	**KMR20005**	SI ABS
2.0 16V Turbo - 2.2 DGi	X		03-ago	1603143	**KMR12006**	SI ABS
2.0 16V Turbo - 2.2 DGi		X	03-ago	1604314	**KMR20005**	SI ABS
2.0 DTI 16V - 3.2 V6	X		02-giu	1603143	**KMR12006**	SI ABS
2.0 DTI 16V - 3.2 V6		X	02-giu	1604314	**KMR20005**	SI ABS
2.2 DTI 16V	X		02-apr	1603143	**KMR12006**	SI ABS
2.2 DTI 16V		X	02-apr	1604314	**KMR20005**	SI ABS
2.8 V6 Turbo OPC		X	06-ago	1604314	**KMR20005**	SI ABS
3.0 CDTI	X		03-mag	1603143	**KMR12006**	SI ABS
3.0 CDTI		X	03-mag	1604314	**KMR20005**	SI ABS

follow OPEL

MODELLO MODEL	ASS.ANT. FRONT AXLE	ASS.POS. REAR AXLE	ANNO YEAR	RIF ORIGINALE ORIGINAL REF	RIF CORAM CORAM REF	NOTE NOTES
VECTRA C GTS						
1.6 -1.8 - 2.8 V6 Turbo - 3.0 CDTi		X	05-ago	1604314	**KMR20005**	SI ABS
1.8 16V - 2.2 16V - 2.2 DTI 16V	X		02-ago	1603143	**KMR12006**	SI ABS
1.8 16V - 2.2 16V - 2.2 DTI 16V		X	02-ago	1604314	**KMR20005**	SI ABS
1.9 CDTI	X		04-set	1603143	**KMR12006**	SI ABS
1.9 CDTI		X	04-set	1604314	**KMR20005**	SI ABS
2.0 16V Turbo - 2.2 DGi	X		03-ago	1603143	**KMR12006**	SI ABS
2.0 16V Turbo - 2.2 DGi		X	03-ago	1604314	**KMR20005**	SI ABS
2.0 DTI 16V	X		02-mag	1603143	**KMR12006**	SI ABS
2.0 DTI 16V		X	02-mag	1604314	**KMR20005**	SI ABS
3.0 CDTI	X		03-mag	1603143	**KMR12006**	SI ABS
3.0 CDTI		X	03-mag	1604314	**KMR20005**	SI ABS
3.2 V6	X		02-giu	1603143	**KMR12006**	SI ABS
3.2 V6		X	02-giu	1604314	**KMR20005**	SI ABS
VECTRA C Station wagon						
1.6 - 2.8 V6 Turbo - 3.0 CDTi		X	05-ago	1604314	**KMR20005**	SI ABS
1.6 16V	X		04-mag	1603143	**KMR12006**	SI ABS
1.6 16V		X	04-mag	1604314	**KMR20005**	SI ABS
1.8	X		03-giu	1603143	**KMR12006**	SI ABS
1.8 - 2.0 Turbo - 2.2 direct		X	03-ago	1604314	**KMR20005**	SI ABS
1.9 CDTI	X		04-set	1603143	**KMR12006**	SI ABS
1.9 CDTI		X	04-set	1604314	**KMR20005**	SI ABS
2.0 DTI - 2.2 DTI - 3.0 V6 CDTI - 3.2 V6	X		03-mag	1603143	**KMR12006**	SI ABS
2.0 DTI - 2.2 DTI - 3.0 V6 CDTI - 3.2 V6		X	03-mag	1604314	**KMR20005**	SI ABS
2.0 Turbo - 2.2 direct	X		03-ago	1603143	**KMR12006**	SI ABS
VIVARO A Combi						
1.9 DI - 1.9 DTI - 2.0 16V	X		01->	4412598	**KCR21005**	
2.0 CDTI - 2.0 ECOTEC - 2.5CDTI	X		06->	4412598	**KCR21005**	
2.5 DTI	X		03->	4412598	**KCR21005**	
VIVARO A Furgonato						
1.9 DI - 1.9 DTI - 2.0 16V	X		01->	4412598	**KCR21005**	
2.0 CDTI - 2.0 ECOTEC - 2.5CDTI	X		06->	4412598	**KCR21005**	
2.5 DTI	X		03->	4412598	**KCR21005**	
VIVARO A Pianale piatto						
1.9 Di -	X		01->	4412598	**KCR21005**	
1.9 DTI - 2.0 CDTI - 2.0 ECOTEC - 2.5CDTI	X		06->	4412598	**KCR21005**	
2.0 16V - 2.5 DTI	X		03->	4412598	**KCR21005**	

follow OPEL

MODELLO MODEL	ASS.ANT. FRONT AXLE	ASS.POS. REAR AXLE	ANNO YEAR	RIF ORIGINALE ORIGINAL REF	RIF CORAM CORAM REF	NOTE NOTES
ZAFIRA / ZAFIRA FAMILY B						
1.6 - 1.6 CNG - 1.8 - 1.9 CDTI	X		mag-15	13110964	**KMR20001**	SI ABS
1.6 - 1.8 - 1.9 CDTI		X	ott-14	1604316	**KMR20006**	SI ABS
1.6 CNG - 1.9 CDTI	X		mag-15	1603841	**KMR20007**	SI ABS
1.6 CNG Turbo	X		ott-15	1603841	**KMR20007**	SI ABS
1.6 FlexFuel	X		ott-15	1603841	**KMR20007**	SI ABS
1.7 CDTI	X		ago-15	1603841	**KMR20007**	SI ABS
1.7 CDTI		X	ago-15	1604316	**KMR20006**	SI ABS
1.8 LPG	X		set-15	13110964	**KMR20001**	SI ABS
1.8 LPG		X	set-15	1604316	**KMR20006**	SI ABS
2.0	X		05-ott	13110964	**KMR20001**	SI ABS
2.0	X		05-ott	1603841	**KMR20007**	SI ABS
2.0		X	05-ott	1604316	**KMR20006**	SI ABS
2.2	X		05-dic	13110964	**KMR20001**	SI ABS
2.2	X		05-dic	1603841	**KMR20007**	SI ABS
2.2		X	05-ott	1604316	**KMR20006**	SI ABS
ZAFIRA A MPV/Space wagon						
1.6	X		03-mag	13123488	**KMR20004**	SI ABS
1.6		X	03-mag	1604002	**KMR20002**	SI ABS
1.6 16V - 1.8 16V - 2.0 DI 16V	X		99-05	13123488	**KMR20004**	SI ABS
1.6 16V - 1.8 16V - 2.0 DI 16V		X	99-05	1604002	**KMR20002**	SI ABS
1.6 CNG - 2.0 OPC	X		01-mag	13123488	**KMR20004**	SI ABS
1.6 CNG - 2.0 OPC		X	01-mag	1604002	**KMR20002**	SI ABS
2.0 DTI 16V - 2.2 16V	X		00-05	13123488	**KMR20004**	SI ABS
2.0 DTI 16V - 2.2 16V		X	00-05	1604002	**KMR20002**	SI ABS
2.2 DTI 16V	X		02-mag	13123488	**KMR20004**	SI ABS
2.2 DTI 16V		X	02-mag	1604002	**KMR20002**	SI ABS
ZAFIRA B Cassone/Limousine						
1.6 CNG Turbo	X		set-15	1603841	**KMR20007**	SI ABS
1.6 CNG VAN - 1.8 VAN - 1.9 CDTI VAN	X		mag-15	13110964	**KMR20001**	SI ABS
1.6 CNG VAN - 1.9 CDTI VAN	X		mag-15	1603841	**KMR20007**	SI ABS
1.7 CDTI VAN	X		ago-15	1603841	**KMR20007**	SI ABS
1.7 CDTI VAN		X	ago-15	1604316	**KMR20006**	SI ABS
1.8 VAN - 1.9 CDTI VAN		X	mag-15	1604316	**KMR20006**	SI ABS
2.0 VAN	X		05-ott	13110964	**KMR20001**	SI ABS
2.0 VAN	X		05-ott	1603841	**KMR20007**	SI ABS
2.0 VAN		X	05-ott	1604316	**KMR20006**	SI ABS

follow OPEL

MODELLO MODEL	ASS.ANT. FRONT AXLE	ASS.POS. REAR AXLE	ANNO YEAR	RIF ORIGINALE ORIGINAL REF	RIF CORAM CORAM REF	NOTE NOTES
ZAFIRA TOURER C						
1.4 - 1.4 LPG - 1.6 CNG - 1.8 - 2.0 CDTi	X		11->	13502829	**KMR20009**	SI ABS
1.6	X		12->	13502829	**KMR20009**	SI ABS
1.6 CDTI - 1.6 SIDI - 2.0 BiTurbo CDTI	X		13->	13502829	**KMR20009**	SI ABS

PEUGEOT

MODELLO MODEL	ASS.ANT. FRONT AXLE	ASS.POS. REAR AXLE	ANNO YEAR	RIF ORIGINALE ORIGINAL REF	RIF CORAM CORAM REF	NOTE NOTES
1007						
1.4 - 1.4 16V - 1.4 Hdi - 1.6 16V	X		05->	3350.72	**KCR10001**	SI ABS
1.4 - 1.4 16V - 1.4 Hdi - 1.6 16V		X	05->	3730.21	**KCR10005**	
1.6 Hdi	X		07->	3350.72	**KCR10001**	SI ABS
1.6 Hdi		X	07->	3730.21	**KCR10005**	
106 I						
1.0 - 1.1 - 1.4		X	91-96	3748.17	**KCR10103**	
1.3 - 1.6		X	93-96	3748.17	**KCR10103**	
1.4 D - 1.5 D		X	94-96	3748.17	**KCR10103**	
106 II						
1.0 i		X	96-01	3730.21	**KCR10101**	
1.0 i	X		96-01	3350.32	**KCR10004**	
1.0 i - 1.5 D		X	96-01	3748.17	**KCR10103**	
1.1 i - 1.4 i - 1.5 D - 1.6 S16 Electric	X		96-04	3350.32	**KCR10004**	
1.1 i - 1.4 i - 1.5 D - Electric		X	96-04	3730.21	**KCR10101**	
1.6 i		X	96-99	3730.21	**KCR10101**	
1.6 i		X	96-99	3748.17	**KCR10103**	
1.6 i	X		96-01	3350.32	**KCR10004**	
106 Van II Cassone						
1.0 - 1.5 D		X	96-01	3730.21	**KCR10101**	
1.0 - 1.5 D		X	96-01	3748.17	**KCR10103**	
1.0 - 1.5 D	X		96-01	3350.32	**KCR10004**	
107						
1.0 - 1.4 Hdi	X		mag-14	6822.JL	**KCR26001**	SI ABS
1.0 - 1.4 Hdi		X	mag-14	3748.85	**KMR10001**	

follow PEUGEOT

MODELLO MODEL	ASS.ANT. FRONT AXLE	ASS.POS. REAR AXLE	ANNO YEAR	RIF ORIGINALE ORIGINAL REF	RIF CORAM CORAM REF	NOTE NOTES
108						
1.0 72	X		18->	6822.JL	**KCR26001**	SI ABS
1.0 72		X	18->	3748.85	**KMR10001**	
1.0 Vti - 1.2	X		14->	6822.JL	**KCR26001**	SI ABS
1.0 Vti - 1.2		X	14->	3748.85	**KMR10001**	
2008 I						
1.2 PureTech 82	X		18-19	3350.72	**KCR10001**	SI ABS
1.2 PureTech 82	X		18-19	1606623580	**KCR10002**	SI ABS
1.2 THP 110/PureTech 110 - 1.6 BlueHDi 75	X		15->	3350.72	**KCR10001**	SI ABS
1.2 THP 110/PureTech 110 - 1.6 BlueHDi 75	X		15->	1606623580	**KCR10002**	SI ABS
1.2 THP 130/PureTech 130 - 1.6 BlueHDi 100	X		15->	3350.72	**KCR10001**	SI ABS
1.2 THP 130/PureTech 130 - 1.6 BlueHDi 100	X		15->	1606623580	**KCR10002**	SI ABS
1.2 Vti	X		13-18	3350.72	**KCR10001**	SI ABS
1.2 Vti	X		13-18	1606623580	**KCR10002**	SI ABS
1.4 Hdi - 1.6 Hdi - 1.6 Vti	X		13->	3350.72	**KCR10001**	SI ABS
1.4 Hdi - 1.6 Hdi - 1.6 Vti	X		13->	1606623580	**KCR10002**	SI ABS
1.5 BlueHDi 100 - 1.5 BlueHDi 120	X		18->	3350.72	**KCR10001**	SI ABS
1.5 BlueHDi 100 - 1.5 BlueHDi 120	X		18->	1606623580	**KCR10002**	SI ABS
1.6 BlueHDi - 1.6 BlueHDi 120	X		14->	3350.72	**KCR10001**	SI ABS
1.6 BlueHDi - 1.6 BlueHDi 120	X		14->	1606623580	**KCR10002**	SI ABS
205 Furgonato						
1.1		X	83-90	3748.17	**KCR10103**	
1.4		X	83-87	3748.17	**KCR10103**	
1.7 Diesel		X	94-97	3748.17	**KCR10103**	
1.8 D		X	83-90	3748.17	**KCR10103**	
205 I						
1.0 - 1.1 - 1.4 - 1.6 GTI - 1.7 Diesel		X	83-87	3748.17	**KCR10103**	
1.6		X	86-87	3748.17	**KCR10103**	
205 I Cabriolet						
1.1 CJ		X	89-94	3748.17	**KCR10103**	
1.4 CJ		X	88-94	3748.17	**KCR10103**	
1.4 CJ Cat		X	89-93	3748.17	**KCR10103**	
1.4 CT		X	86-88	3748.17	**KCR10103**	
1.6 CJ		X	92-94	3748.17	**KCR10103**	
1.6 CTI		X	86-90	3748.17	**KCR10103**	
1.9 CTI		X	87-94	3748.17	**KCR10103**	
1.9 CTi		X	87-90	3748.17	**KCR10103**	

follow PEUGEOT

MODELLO MODEL	ASS.ANT. FRONT AXLE	ASS.POS. REAR AXLE	ANNO YEAR	RIF ORIGINALE ORIGINAL REF	RIF CORAM CORAM REF	NOTE NOTES
205 II						
1.0 - 1.1 - 1.4 - 1.6 - 1.7 Diesel - 1.9 Diesel		X	87-98	3748.17	**KCR10103**	
1.3 Rallye		X	87-90	3748.17	**KCR10103**	
1.4 Cat		X	87-93	3748.17	**KCR10103**	
1.6 Aut.		X	90-98	3748.17	**KCR10103**	
1.6 GTI		X	87-89	3748.17	**KCR10103**	
1.8 XDT		X	90-97	3748.17	**KCR10103**	
206 Due volumi						
1.1		X	98-00	3748.17	**KCR10103**	
1.1 - 1.6 i		X	98-00	3730.21	**KCR10101**	
1.1 - 1.6 i	X		98-00	3350.32	**KCR10004**	
1.1 i		X	98-07	3730.21	**KCR10101**	
1.1 i	X		98-07	3350.32	**KCR10004**	
1.4 16V		X	03-ago	3730.21	**KCR10101**	
1.4 16V	X		03-ago	3350.32	**KCR10004**	
1.4 Hdi eco 70		X	01-set	3730.21	**KCR10101**	
1.4 Hdi eco 70	X		01-set	3350.32	**KCR10004**	
1.4 i		X	98-12	3730.21	**KCR10101**	
1.4 i	X		98-12	3350.32	**KCR10004**	
1.4 LPG		X	06-lug	3730.21	**KCR10101**	
1.4 LPG	X		06-lug	3350.32	**KCR10004**	
1.9 D		X	98-01	3730.21	**KCR10101**	
1.9 D	X		98-01	3350.32	**KCR10004**	
2.0 HDI 90		X	99-09	3730.21	**KCR10101**	
206 SW						
1.1 - 1.4 Hdi	X		02->	3350.32	**KCR10004**	
1.1 - 1.4 Hdi - 1.6 16V - 2.0 Hdi		X	02->	3730.21	**KCR10101**	
1.4	X		02-lug	3350.32	**KCR10004**	
1.4 - 2.0 16V		X	02-lug	3730.21	**KCR10101**	
1.4 16V		X	03->	3730.21	**KCR10101**	
1.4 16V	X		03->	3350.32	**KCR10004**	
1.6 Hdi 110		X	04->	3730.21	**KCR10101**	
206 Tre volumi						
1.4		X	07->	3730.21	**KCR10101**	
1.4 - 1.6 16V	X		07->	3350.32	**KCR10004**	
1.4 Hdi eco 70		X	08->	3730.21	**KCR10101**	
1.4 Hdi eco 70	X		08->	3350.32	**KCR10004**	

follow PEUGEOT

MODELLO MODEL	ASS.ANT. FRONT AXLE	ASS.POS. REAR AXLE	ANNO YEAR	RIF ORIGINALE ORIGINAL REF	RIF CORAM CORAM REF	NOTE NOTES
206+						
1.1 - 1.1 LPG - 1.4 Hdi eco 70 - 1.4 i		X	set-13	3730.21	**KCR10101**	
1.1 - 1.1 LPG - 1.4 Hdi eco 70 - 1.4 i		X	set-13	3350.32	**KCR10004**	
207 CC						
1.6 16V	X		lug-13	3350.72	**KCR10001**	SI ABS
1.6 16V	X		lug-13	1606623580	**KCR10002**	SI ABS
207 SW						
1.4	X		07-dic	3350.72	**KCR10001**	SI ABS
1.4 16V - 1.6 16V	X		lug-13	3350.72	**KCR10001**	SI ABS
1.4 16V - 1.6 16V - 1.6 Hdi	X		lug-13	1606623580	**KCR10002**	SI ABS
1.4 LPG - 1.6 16V RC - 1.6 16V Turbo	X		07-dic	1606623580	**KCR10002**	SI ABS
207/207+						
1.4 - 1.4 Hdi	X		giu-15	3350.72	**KCR10001**	SI ABS
1.4 16V	X		giu-13	3350.72	**KCR10001**	SI ABS
1.4 16V	X		lug-13	1606623580	**KCR10002**	SI ABS
1.4 Hdi	X		giu-15	1606623580	**KCR10002**	SI ABS
1.6 16V - 1.6 16V Turbo - 1.6 Hdi	X		giu-13	1606623580	**KCR10002**	SI ABS
1.6 16V Vti	X		07-dic	3350.72	**KCR10001**	SI ABS
1.6 16V Vti - 1.6 16V RC	X		07-dic	1606623580	**KCR10002**	SI ABS
1.6 Hdi 110	X		09-dic	1606623580	**KCR10002**	SI ABS

follow PEUGEOT

MODELLO MODEL	ASS.ANT. FRONT AXLE	ASS.POS. REAR AXLE	ANNO YEAR	RIF ORIGINALE ORIGINAL REF	RIF CORAM CORAM REF	NOTE NOTES
208 I						
1.0 - 1.2 Vti - 1.4 Hdi - 1.4 Vti - 1.6 - 1.6 Gti - 1.6 Hdi	X		12->	3350.72	**KCR10001**	SI ABS
1.0 - 1.2 Vti 72 - 1.4 Hdi - 1.4 Vti - 1.6 - 1.6 Gti - 1.6 Hdi	X		12->	1606623580	**KCR10002**	SI ABS
1.0 - 1.2 Vti 82 - 1.4 Hdi - 1.4 Vti - 1.6 - 1.6 Gti - 1.6 Hdi		X	12->	3748.A1	**KCR10003**	
1.2 GPL - 1.6 BlueHDi 100 - 1.6 THP 165	X		15->	3350.72	**KCR10001**	SI ABS
1.2 GPL - 1.6 BlueHDi 100 - 1.6 THP 165	X		15->	1606623580	**KCR10002**	SI ABS
1.2 GPL - 1.6 BlueHDi 100 - 1.6 THP 165		X	15->	3748.A1	**KCR10003**	
1.2 PureTech 82 - 1.5 BlueHDi 100	X		18->	3350.72	**KCR10001**	SI ABS
1.2 PureTech 82 - 1.5 BlueHDi 100	X		18->	1606623580	**KCR10002**	SI ABS
1.2 PureTech 82 - 1.5 BlueHDi 100		X	18->	3748.A1	**KCR10003**	
1.2 THP 110 - 1.4 GPL - 1.6 BlueHDi 120	X		13->	3350.72	**KCR10001**	SI ABS
1.2 THP 110 - 1.4 GPL - 1.6 BlueHDi 120	X		13->	1606623580	**KCR10002**	SI ABS
1.2 THP 110 - 1.4 GPL - 1.6 BlueHDi 120		X	13->	3748.A1	**KCR10003**	
1.2 Vti 68 / PureTech 68	X		16->	3350.72	**KCR10001**	SI ABS
1.2 Vti 68 / PureTech 68	X		16->	1606623580	**KCR10002**	SI ABS
1.2 Vti 68 / PureTech 68		X	16->	3748.A1	**KCR10003**	
1.6 Hdi / BlueHDi 75	X		13->	3350.72	**KCR10001**	SI ABS
1.6 Hdi / BlueHDi 75	X		13->	1606623580	**KCR10002**	SI ABS
1.6 Hdi / BlueHDi 75		X	13->	3748.A1	**KCR10003**	
3008 MPV						
1.2	X		15-16	1606623580	**KCR10002**	SI ABS
1.6 BlueHDi 120	X		14-16	1606623580	**KCR10002**	SI ABS
1.6 Hdi - 1.6 THP - 1.6 Vti - 2.0 Hdi	X		set-16	1606623580	**KCR10002**	SI ABS
2.0 Hdi 150/BlueHDi 150	X		set-16	1606623580	**KCR10002**	SI ABS
2.0 Hdi Hybrid4	X		nov-16	1606623580	**KCR10002**	SI ABS
301						
1.1 Vti 82 - 1.6 BlueHDi 100	X		14->	3350.72	**KCR10001**	SI ABS
1.1 Vti 82 - 1.6 BlueHDi 100		X	14->	3748.A1	**KCR10003**	

follow PEUGEOT

MODELLO MODEL	ASS.ANT. FRONT AXLE	ASS.POS. REAR AXLE	ANNO YEAR	RIF ORIGINALE ORIGINAL REF	RIF CORAM CORAM REF	NOTE NOTES
306						
1.1 - 1.4 SL	X		94-01	3350.32	**KCR10004**	
1.1 - 1.4 SL - 1.8 ST - 1.9 SLD - 1.9 SRDT - 2.0 S16 - 2.0 ST		X	94-01	3730.21	**KCR10101**	
1.1 - 1.4 SL - 1.8 ST - 1.9 SLD - 1.9 SRDT - 2.0 S16 - 2.0 ST		X	94-01	3748.17	**KCR10103**	
1.6		X	00-01	3730.21	**KCR10101**	
1.6	X		00-01	3350.32	**KCR10004**	
1.6 SR		X	94-00	3730.21	**KCR10101**	
1.6 SR		X	94-00	3748.17	**KCR10103**	
1.6 SR	X		94-00	3350.32	**KCR10004**	
1.8 16V - 2.0		X	97-01	3730.21	**KCR10101**	
1.8 16V - 2.0		X	97-01	3748.17	**KCR10103**	
1.9 D		X	98-01	3730.21	**KCR10101**	
1.9 D		X	98-01	3748.17	**KCR10103**	
2.0 HDI 90		X	99-01	3730.21	**KCR10101**	
306 Break						
1.4 - 1.6	X		97-02	3350.32	**KCR10004**	
306 Cabriolet						
1.6		X	96-02	3730.21	**KCR10101**	
1.6		X	96-00	3748.17	**KCR10103**	
1.8 - 2.0		X	94-02	3730.21	**KCR10101**	
1.8 - 2.0		X	94-02	3748.17	**KCR10103**	
1.8 16V - 2.0 16V		X	97-02	3730.21	**KCR10101**	
2.0 16V		X	97-02	3748.17	**KCR10103**	
306 Cassone						
1.9 D - 1.9 STD		X	94-99	3748.17	**KCR10103**	
306 Due volumi						
1.1 - 1.4 - 1.6	X		93-01	3350.32	**KCR10004**	
1.1 - 1.4 - 1.6 - 1.8 - 1.8 D - 1.9 D - 1.9 DT - 2.0 S16 - 2.0 Xsi		X	93-01	3730.21	**KCR10101**	
1.1 - 1.4 - 1.8 - 1.8 D - 1.9 D - 1.9 DT - 2.0 S16 - 2.0 Xsi		X	93-01	3748.17	**KCR10103**	
1.6		X	93-00	3748.17	**KCR10103**	
1.8 16V - 2.0 16V		X	97-01	3730.21	**KCR10101**	
2.0 16V		X	97-01	3748.17	**KCR10103**	
2.0 HDI 90		X	99-02	3730.21	**KCR10101**	

follow PEUGEOT

MODELLO MODEL	ASS.ANT. FRONT AXLE	ASS.POS. REAR AXLE	ANNO YEAR	RIF ORIGINALE ORIGINAL REF	RIF CORAM CORAM REF	NOTE NOTES
307						
1.4	X		00-03	1606623580	**KCR10002**	SI ABS
1.4		X	00-03	3748.83	**KCR10006**	
1.4 16V - 2.0 Hdi 135	X		03-lug	1606623580	**KCR10002**	SI ABS
1.4 16V - 2.0 Hdi 135		X	03-lug	3748.83	**KCR10006**	
1.4 Hdi	X		01-mag	1606623580	**KCR10002**	SI ABS
1.4 Hdi		X	01-mag	3748.83	**KCR10006**	
1.6 16V - 2.0 16V - 2.0 Hdi 110 - 2.0 Hdi 90	X		00-07	1606623580	**KCR10002**	SI ABS
1.6 16V - 2.0 16V - 2.0 Hdi 110 - 2.0 Hdi 90		X	00-07	3748.83	**KCR10006**	
1.6 Hdi	X		05-set	1606623580	**KCR10002**	SI ABS
1.6 Hdi		X	05-set	3748.83	**KCR10006**	
1.6 Hdi 110	X		04-set	1606623580	**KCR10002**	SI ABS
1.6 Hdi 110		X	04-set	3748.83	**KCR10006**	
307 Break						
1.4 16V	X		03-lug	1606623580	**KCR10002**	SI ABS
1.4 16V		X	03-lug	3748.83	**KCR10006**	
1.6 16V - 2.0 Hdi 90	X		02-ago	1606623580	**KCR10002**	SI ABS
1.6 16V - 2.0 Hdi 90		X	02-ago	3748.83	**KCR10006**	
1.6 Hdi - 2.0 16V	X		05-ago	1606623580	**KCR10002**	SI ABS
1.6 Hdi - 2.0 16V		X	05-ago	3748.83	**KCR10006**	
1.6 Hdi 110 - 2.0 Hdi 135	X		04-ago	1606623580	**KCR10002**	SI ABS
1.6 Hdi 110 - 2.0 Hdi 135		X	04-ago	3748.83	**KCR10006**	
2.0	X		02-mag	1606623580	**KCR10002**	SI ABS
2.0		X	02-mag	3748.83	**KCR10006**	
2.0 Hdi 110	X		02-set	1606623580	**KCR10002**	SI ABS
2.0 Hdi 110		X	02-set	3748.83	**KCR10006**	
307 CC						
1.6 16V - 2.0 16V	X		03-set	1606623580	**KCR10002**	SI ABS
1.6 16V - 2.0 16V		X	03-set	3748.83	**KCR10006**	
2.0 Hdi 135	X		05-set	1606623580	**KCR10002**	SI ABS
2.0 Hdi 135		X	05-set	3748.83	**KCR10006**	

follow PEUGEOT

MODELLO MODEL	ASS.ANT. FRONT AXLE	ASS.POS. REAR AXLE	ANNO YEAR	RIF ORIGINALE ORIGINAL REF	RIF CORAM CORAM REF	NOTE NOTES
307 SW						
1.4	X		02-mar	1606623580	**KCR10002**	SI ABS
1.4		X	02-mar	3748.83	**KCR10006**	
1.4 16V - 1.6 Hdi 110	X		03-lug	1606623580	**KCR10002**	SI ABS
1.4 16V - 1.6 Hdi 110		X	03-lug	3748.83	**KCR10006**	
1.6 16V - 2.0 16V - 2.0 Hdi 90	X		02-ago	1606623580	**KCR10002**	SI ABS
1.6 16V - 2.0 16V - 2.0 Hdi 90		X	02-ago	3748.83	**KCR10006**	
2.0 Hdi 110	X		02-set	1606623580	**KCR10002**	SI ABS
2.0 Hdi 110		X	02-set	3748.83	**KCR10006**	
2.0 Hdi 135	X		04-ago	1606623580	**KCR10002**	SI ABS
2.0 Hdi 135		X	04-ago	3748.83	**KCR10006**	
307 SW Cassone						
1.4 Hdi	X		02-mag	1606623580	**KCR10002**	SI ABS
1.4 Hdi		X	02-mag	3748.83	**KCR10006**	
2.0 Hdi	X		03-ago	1606623580	**KCR10002**	SI ABS
2.0 Hdi		X	03-ago	3748.83	**KCR10006**	
308 CC						
1.6 16V - 1.6 Hdi - 2.0 CVVT - 2.0 Hdi	X		set-14	1606623580	**KCR10002**	SI ABS
308 I						
1.4 16V - 1.6 16V - 1.6 Hdi - 2.0 Hdi	X		lug-14	1606623580	**KCR10002**	SI ABS
1.6 Bioflex - 2.0 Bioflex	X		ago-14	1606623580	**KCR10002**	SI ABS
308 SW						
1.4 16V - 1.6 16V - 1.6 Hdi - 2.0 Hdi	X		lug-14	1606623580	**KCR10002**	SI ABS
1.6 Bioflex	X		set-14	1606623580	**KCR10002**	SI ABS
309 I						
1.1 - 1.3 - 1.6 - 1.9		X	85-89	3748.17	**KCR10103**	
1.4		X	88-89	3748.17	**KCR10103**	
1.9 D - 1.9 GTI		X	86-89	3748.17	**KCR10103**	
309 II						
1.1		X	90-93	3748.17	**KCR10103**	
1.4 - 1.6 - 1.8 Diesel - 1.9 - 1.9 Diesel - 1.9 GTI - 1.9 GTI 16V		X	89-93	3748.17	**KCR10103**	

follow PEUGEOT

MODELLO MODEL	ASS.ANT. FRONT AXLE	ASS.POS. REAR AXLE	ANNO YEAR	RIF ORIGINALE ORIGINAL REF	RIF CORAM CORAM REF	NOTE NOTES
5008						
1.2	X		15-17	1606623580	**KCR10002**	SI ABS
1.6 16V - 1.6 Hdi - 2.0 Hdi - 2.0 Hdi 150 / BlueHDi 150	X		set-17	1606623580	**KCR10002**	SI ABS
1.6 BlueHDi 120	X		14-17	1606623580	**KCR10002**	SI ABS
1.6 THP 150 - 1.6 THP 163 - 1.6 THP 165	X		dic-17	1606623580	**KCR10002**	SI ABS
BIPPER						
1.3 Hdi 75		X	10->	1606635380	**KMR12001**	SI ABS
1.4	X		08->	3326.72	**KCR12003**	SI ABS
1.4 - 1.4 Hdi		X	08->	1606635380	**KMR12001**	SI ABS
BIPPER Tepee						
1.3 Hdi 75	X		10->	1587565	**KCR12001**	SI ABS
1.3 Hdi 75		X	10->	1606635380	**KMR12001**	SI ABS
1.4 - 1.4 Hdi		X	08->	1606635380	**KMR12001**	SI ABS
1.4 Hdi	X		08->	1587565	**KCR12001**	SI ABS

follow PEUGEOT

MODELLO MODEL	ASS.ANT. FRONT AXLE	ASS.POS. REAR AXLE	ANNO YEAR	RIF ORIGINALE ORIGINAL REF	RIF CORAM CORAM REF	NOTE NOTES
BOXER Autobus						
1.9 D - 1.9 TD - 2.0 i - 2.5 D - 2.5 TD	X		94-02	1606375080	**KCR10102**	
1.9 D - 1.9 TD - 2.0 i - 2.5 D - 2.5 TD	X		94-02	1300535080	**KCR10104**	
1.9 D - 1.9 TD - 2.0 i - 2.5 D - 2.5 TD		X	94-02	3350.25	**KCR10105**	
1.9 D - 1.9 TD - 2.0 i - 2.5 D - 2.5 TD	X		94-02	3326.27	**KCR12007**	
1.9 D - 1.9 TD - 2.0 i - 2.5 D - 2.5 TD		X	94-02	3730.32	**KCR12011**	
1.9 D - 1.9 TD - 2.0 i - 2.5 D - 2.5 TD	X		94-02	3326.63	**KCR10106**	
1.9 TD 4x4 - 2.0 i 4x4 - 2.5 D 4x4 - 2.5 TD 4x4	X		96-02	1606375080	**KCR10102**	
1.9 TD 4x4 - 2.0 i 4x4 - 2.5 D 4x4 - 2.5 TD 4x4	X		96-02	1300535080	**KCR10104**	
1.9 TD 4x4 - 2.0 i 4x4 - 2.5 D 4x4 - 2.5 TD 4x4	X		96-02	3326.27	**KCR12007**	
1.9 TD 4x4 - 2.0 i 4x4 - 2.5 D 4x4 - 2.5 TD 4x4	X		96-02	3326.63	**KCR10106**	
2.0 - 2.0 Hdi - 2.2 Hdi - 2.8 Hdi		X	02->	1606374780	**KMR12007**	SI ABS
2.0 - 2.0 Hdi - 2.2 Hdi - 2.8 Hdi - 2.8 Hdi 4x4	X		02->	1606375080	**KCR10102**	
2.0 BlueHDi 110 - 2.0 BlueHDi 130 - 2.0 BlueHDi 160	X		15-19	1606374680	**KCR12002**	SI ABS
2.0 BlueHDi 110 - 2.0 BlueHDi 130 - 2.0 BlueHDi 160		X	15-19	1606374780	**KMR12007**	SI ABS
2.2 BlueHDi 120 - 2.2 BlueHDi 140	X		19->	1606374680	**KCR12002**	SI ABS
2.2 BlueHDi 120 - 2.2 BlueHDi 140		X	19->	1606374780	**KMR12007**	SI ABS
2.2 Hdi 100 - 2.2 HDi 120 - 3.0 HDi 160	X		06->	1606374680	**KCR12002**	SI ABS
2.2 Hdi 100 - 2.2 HDi 120 - 3.0 HDi 160		X	06->	1606374780	**KMR12007**	SI ABS
2.2 Hdi 110 - 2.2 Hdi 130 - 2.2 Hdi 150 - 3.0 Hdi 175	X		11->	1606374680	**KCR12002**	SI ABS
2.2 Hdi 110 - 2.2 Hdi 130 - 2.2 Hdi 150 - 3.0 Hdi 175		X	11->	1606374780	**KMR12007**	SI ABS
2.5 TDI		X	97-02	3350.25	**KCR10105**	
2.5 TDI		X	97-02	3730.32	**KCR12011**	
2.5 TDI - 2.5 TDI 4x4	X		97-02	1606375080	**KCR10102**	
2.5 TDI - 2.5 TDI 4x4	X		97-02	1300535080	**KCR10104**	
2.5 TDI - 2.5 TDI 4x4	X		97-02	3326.27	**KCR12007**	
2.5 TDI - 2.5 TDI 4x4	X		97-02	3326.63	**KCR10106**	
2.8 D	X		99-02	1606375080	**KCR10102**	
2.8 D	X		99-02	1300535080	**KCR10104**	
2.8 D		X	99-02	3350.25	**KCR10105**	
2.8 D	X		99-02	3326.27	**KCR12007**	
2.8 D		X	99-02	3730.32	**KCR12011**	
2.8 D	X		99-02	3326.63	**KCR10106**	
2.8 HDI		X	00-02	3350.25	**KCR10105**	
2.8 HDI		X	00-02	3730.32	**KCR12011**	
2.8 HDi	X		00-01	1606375080	**KCR10102**	
2.8 HDi		X	00-01	3350.25	**KCR10105**	
2.8 HDi	X		00-01	3326.27	**KCR12007**	
2.8 HDi		X	00-01	3730.32	**KCR12011**	
2.8 HDi	X		00-01	3326.63	**KCR10106**	
2.8 HDi		X	04-giu	1606374780	**KMR12007**	SI ABS
2.8 HDI - 2.8 HDi 4x4	X		00-02	1606375080	**KCR10102**	
2.8 HDI - 2.8 HDi 4x4	X		00-02	1300535080	**KCR10104**	
2.8 HDI - 2.8 HDi 4x4	X		00-02	3326.27	**KCR12007**	
2.8 HDI - 2.8 HDi 4x4	X		00-02	3326.63	**KCR10106**	
3.0 Hdi 145	X		10->	1606374680	**KCR12002**	SI ABS

follow PEUGEOT

MODELLO MODEL	ASS.ANT. FRONT AXLE	ASS.POS. REAR AXLE	ANNO YEAR	RIF ORIGINALE ORIGINAL REF	RIF CORAM CORAM REF	NOTE NOTES
BOXER Furgonato						
1.9 D - 1.9 TD - 2.0 i - 2.5 D - 2.5 TD	X		94-02	1606375080	**KCR10102**	
1.9 D - 1.9 TD - 2.0 i - 2.5 D - 2.5 TD	X		94-02	1300535080	**KCR10104**	
1.9 D - 1.9 TD - 2.0 i - 2.5 D - 2.5 TD		X	94-02	3350.25	**KCR10105**	
1.9 D - 1.9 TD - 2.0 i - 2.5 D - 2.5 TD	X		94-02	3326.27	**KCR12007**	
1.9 D - 1.9 TD - 2.0 i - 2.5 D - 2.5 TD		X	94-02	3730.32	**KCR12011**	
1.9 D - 1.9 TD - 2.0 i - 2.5 D - 2.5 TD	X		94-02	3326.63	**KCR10106**	
1.9 DT 4x4	X		96-98	1606375080	**KCR10102**	
1.9 DT 4x4	X		96-98	1300535080	**KCR10104**	
1.9 DT 4x4	X		96-98	3326.27	**KCR12007**	
1.9 DT 4x4	X		96-98	3326.63	**KCR10106**	
2.0 - 2.2 Hdi - 2.8 Hdi - 2.8 Hdi 4x4		X	02->	1606374780	**KMR12007**	SI ABS
2.0 - 2.0 Hdi - 2.2 HDI	X		02->	1606375080	**KCR10102**	
2.0 BiFuel		X	01-giu	3326.27	**KCR12007**	
2.0 BiFuel	X		01-giu	3326.63	**KCR10106**	
2.0 BlueHDi 110 - 2.0 BlueHDi 130 - 2.0 BlueHDi 160	X		15-19	1606374680	**KCR12002**	SI ABS
2.0 BlueHDi 110 - 2.0 BlueHDi 130 - 2.0 BlueHDi 160		X	15-19	1606374780	**KMR12007**	SI ABS
2.0 HDI	X		01-feb	1606375080	**KCR10102**	
2.0 HDI	X		01-feb	1300535080	**KCR10104**	
2.0 HDI		X	01-feb	3350.25	**KCR10105**	
2.0 HDI	X		01-feb	3326.27	**KCR12007**	
2.0 HDI		X	01-feb	3730.32	**KCR12011**	
2.0 HDI	X		01-feb	3326.63	**KCR10106**	
2.2 BlueHDi 120 - 2.2 BlueHDi 140	X		19->	1606374680	**KCR12002**	SI ABS
2.2 BlueHDi 120 - 2.2 BlueHDi 140 - 2.2 BlueHDi 165		X	19->	1606374780	**KMR12007**	SI ABS
2.2 Hdi 100 - 2.2 HDi 120 - 3.0 HDi 160	X		06->	1606374680	**KCR12002**	SI ABS
2.2 Hdi 100 - 2.2 HDi 120 - 3.0 HDi 160		X	06->	1606374780	**KMR12007**	SI ABS
2.2 Hdi 110 - 2.2 Hdi 130 - 2.2 Hdi 150 - 3.0 Hdi 175	X		11->	1606374680	**KCR12002**	SI ABS
2.2 Hdi 110 - 2.2 Hdi 130 - 2.2 Hdi 150 - 3.0 Hdi 175		X	11->	1606374780	**KMR12007**	SI ABS
2.5 D 4x4 - 2.5 TDI 4x4 - 2.8 D	X		99-02	1606375080	**KCR10102**	
2.5 D 4x4 - 2.5 TDI 4x4 - 2.8 D	X		99-02	1300535080	**KCR10104**	
2.5 D 4x4 - 2.5 TDI 4x4 - 2.8 D	X		99-02	3326.27	**KCR12007**	
2.5 D 4x4 - 2.5 TDI 4x4 - 2.8 D	X		99-02	3326.63	**KCR10106**	
2.5 DT	X		97-01	1606375080	**KCR10102**	
2.5 DT	X		97-01	1300535080	**KCR10104**	
2.5 DT		X	97-01	3350.25	**KCR10105**	
2.5 DT	X		97-01	3326.27	**KCR12007**	
2.5 DT		X	97-01	3730.32	**KCR12011**	
2.5 DT	X		97-01	3326.63	**KCR10106**	
2.5 TDI	X		97-02	1606375080	**KCR10102**	
2.5 TDI	X		97-02	1300535080	**KCR10104**	
2.5 TDI		X	97-02	3350.25	**KCR10105**	
2.5 TDI	X		97-02	3326.27	**KCR12007**	
2.5 TDI		X	97-02	3730.32	**KCR12011**	
2.5 TDI	X		97-02	3326.63	**KCR10106**	
2.8 D		X	99-02	3350.25	**KCR10105**	

follow PEUGEOT

MODELLO MODEL	ASS.ANT. FRONT AXLE	ASS.POS. REAR AXLE	ANNO YEAR	RIF ORIGINALE ORIGINAL REF	RIF CORAM CORAM REF	NOTE NOTES
BOXER Pianale piatto						
1.9 TD - 2.0 i - 2.5 D - 2.5 TD	X		94-02	1606375080	**KCR10102**	
1.9 TD - 2.0 i - 2.5 D - 2.5 TD	X		94-02	1300535080	**KCR10104**	
1.9 TD - 2.0 i - 2.5 D - 2.5 TD		X	94-02	3350.25	**KCR10105**	
1.9 TD - 2.0 i - 2.5 D - 2.5 TD	X		94-02	3326.27	**KCR12007**	
1.9 TD - 2.0 i - 2.5 D - 2.5 TD		X	94-02	3730.32	**KCR12011**	
1.9 TD - 2.0 i - 2.5 D - 2.5 TD	X		94-02	3326.63	**KCR10106**	
2.0 BlueHDi 110 - 2.0 BlueHDi 130 - 2.0 BlueHDi 160	X		15-19	1606374680	**KCR12002**	SI ABS
2.0 BlueHDi 110 - 2.0 BlueHDi 130 - 2.0 BlueHDi 160		X	15-19	1606374780	**KMR12007**	SI ABS
2.0 Hdi - 2.2 Hdi - 2.8 Hdi - 2.8 Hdi 4x4	X		02->	1606375080	**KCR10102**	
2.0 Hdi - 2.2 Hdi - 2.8 Hdi - 2.8 Hdi 4x4		X	02->	1606374780	**KMR12007**	SI ABS
2.2 BlueHDi 120 - 2.2 BlueHDi 140	X		19->	1606374680	**KCR12002**	SI ABS
2.2 BlueHDi 120 - 2.2 BlueHDi 140 - 2.2 BlueHDi 165		X	19->	1606374780	**KMR12007**	SI ABS
2.2 Hdi 100 - 2.2 HDi 120 - 3.0 Hdi - 3.0 Hdi 160	X		06->	1606374680	**KCR12002**	SI ABS
2.2 Hdi 100 - 2.2 HDi 120 - 3.0 Hdi - 3.0 Hdi 160		X	06->	1606374780	**KMR12007**	SI ABS
2.2 Hdi 110 - 2.2 Hdi 130 - 2.2 Hdi 150 - 3.0 Hdi 175	X		11->	1606374680	**KCR12002**	SI ABS
2.2 Hdi 110 - 2.2 Hdi 130 - 2.2 Hdi 150 - 3.0 Hdi 175		X	11->	1606374780	**KMR12007**	SI ABS
2.5 D 4x4 - 2.5 TDI 4x4 - 2.8 D	X		99-02	1606375080	**KCR10102**	
2.5 D 4x4 - 2.5 TDI 4x4 - 2.8 D	X		99-02	1300535080	**KCR10104**	
2.5 D 4x4 - 2.5 TDI 4x4 - 2.8 D	X		99-02	3326.27	**KCR12007**	
2.5 D 4x4 - 2.5 TDI 4x4 - 2.8 D	X		99-02	3326.63	**KCR10106**	
2.5 TDI	X		97-02	1606375080	**KCR10102**	
2.5 TDI	X		97-02	1300535080	**KCR10104**	
2.5 TDI		X	97-02	3350.25	**KCR10105**	
2.5 TDI	X		97-02	3326.27	**KCR12007**	
2.5 TDI		X	97-02	3730.32	**KCR12011**	
2.5 TDI	X		97-02	3326.63	**KCR10106**	
2.8 D		X	99-02	3350.25	**KCR10105**	
2.8 D		X	99-02	3730.32	**KCR12011**	
2.8 HDi		X	00-01	3350.25	**KCR10105**	
2.8 HDi	X		00-01	3326.27	**KCR12007**	
2.8 HDi		X	00-01	3730.32	**KCR12011**	
2.8 HDi	X		00-01	3326.63	**KCR10106**	
2.8 HDI	X		00-02	1606375080	**KCR10102**	
2.8 HDI	X		00-02	1300535080	**KCR10104**	
2.8 HDI		X	00-02	3350.25	**KCR10105**	
2.8 HDI	X		00-02	3326.27	**KCR12007**	
2.8 HDI		X	00-02	3730.32	**KCR12011**	
2.8 HDI	X		00-02	3326.63	**KCR10106**	
3.0 Hdi 145	X		10->	1606374680	**KCR12002**	SI ABS
3.0 Hdi 145		X	10->	1606374780	**KMR12007**	SI ABS

follow PEUGEOT

MODELLO MODEL	ASS.ANT. FRONT AXLE	ASS.POS. REAR AXLE	ANNO YEAR	RIF ORIGINALE ORIGINAL REF	RIF CORAM CORAM REF	NOTE NOTES
J5 Autobus						
1.9 D - 2.5 D 4x4 - 2.5 TD - 2.5 TD 4x4	X		90-94	3326.27	**KCR12007**	
2.0 - 2.5 D	X		81-94	3326.27	**KCR12007**	
J5 Furgonato						
1.9 D - 2.5 D 4x4 - 2.5 TD 4x4	X		90-94	3326.27	**KCR12007**	
J5 Pianale piatto						
1.9 D - 2.0 - 2.5 D 4x4 - 2.5 TD - 2.5 TD 4x4	X		90-94	3326.27	**KCR12007**	
2.5 D	X		81-94	3326.27	**KCR12007**	
PARTNER Furgonato						
1.6 - 1.6 HDi1.6 Hdi 16V	X		08->	1606374680	**KCR12002**	SI ABS
1.6 BlueHDi 100 - 1.6 BlueHDi 120	X		15->	1606374680	**KCR12002**	SI ABS
1.6 Hdi 90	X		10->	1606374680	**KCR12002**	SI ABS
1.6 Hdi/BlueHDi 75	X		11->	1606374680	**KCR12002**	SI ABS
Electrique	X		13->	1606374680	**KCR12002**	SI ABS
PARTNER Tepee						
1.6 BlueHDi 100 - 1.6 BlueHDi 120	X		14->	1606374680	**KCR12002**	SI ABS
1.6 Hdi - 1.6 Hdi 16V - 1.6 Hdi 75	X		08->	1606374680	**KCR12002**	SI ABS
1.6 Hdi 90	X		10->	1606374680	**KCR12002**	SI ABS
1.6 VTi	X		ago-16	1606374680	**KCR12002**	SI ABS
RCZ						
1.6 16V - 2.0 Hdi	X		ott-15	1606374680	**KCR12002**	SI ABS
1.6 THP 270	X		13-15	1606374680	**KCR12002**	SI ABS

PORSCHE

MODELLO MODEL	ASS.ANT. FRONT AXLE	ASS.POS. REAR AXLE	ANNO YEAR	RIF ORIGINALE ORIGINAL REF	RIF CORAM CORAM REF	NOTE NOTES
924						
2.0	X		75-89	191598625	**KCR529**	
MACAN						
2.0	X		15->	4H0498625	**KMR27101**	SI ABS
3.0 GTS	X		15-18	4H0498625	**KMR27101**	SI ABS
3.0 S - 3.0 S Diesel - 3.6 Turbo	X		14-18	4H0498625	**KMR27101**	SI ABS

RENAULT

MODELLO MODEL	ASS.ANT. FRONT AXLE	ASS.POS. REAR AXLE	ANNO YEAR	RIF ORIGINALE ORIGINAL REF	RIF CORAM CORAM REF	NOTE NOTES
11						
1.1		X	83-86	6001548986	**KCR21001**	
1.1		X	83-86	7701205778	**KCR21002**	
1.2		X	84-88	6001548986	**KCR21001**	
1.2 - 1.4 Turbo		X	84-88	7701205778	**KCR21002**	
1.4 - 1.6 D - 1.7		X	83-88	6001548986	**KCR21001**	
1.4 - 1.6 D - 1.7		X	83-88	7701205778	**KCR21002**	
19 I						
1.4		X	88-93	6001548986	**KCR21001**	
1.4		X	89-93	7701205778	**KCR21002**	
1.4 - 1.7 - 1.9 D	X		88-92	6001547696	**KCR21004**	
1.4 Cat		X	89-92	6001548986	**KCR21001**	
1.4 Cat		X	89-92	7701205778	**KCR21002**	
1.4 Cat - 1.8 16V	X		89-92	6001547696	**KCR21004**	
1.7 - 1.9 D		X	88-92	6001548986	**KCR21001**	
19 I Cabriolet						
1.7 - 1.8 16V		X	91-92	6001548986	**KCR21001**	
1.7 - 1.8 16V	X		91-92	6001547696	**KCR21004**	
19 I Chamade						
1.4		X	88-92	7701205778	**KCR21002**	
1.4 - 1.7		X	88-92	6001548986	**KCR21001**	
1.4 - 1.7	X		88-92	6001547696	**KCR21004**	
1.8 16V - 1.9 D	X		89-92	6001547696	**KCR21004**	
1.9 D		X	89-92	6001548986	**KCR21001**	
1.9 dT		X	90-92	6001548986	**KCR21001**	
1.9 TD	X		90-92	6001547696	**KCR21004**	
19 II						
1.4		X	92-95	7701205778	**KCR21002**	
1.4 - 1.7 - 1.8 - 1.8 16V - 1.9 - 1.9dT	X		92-95	6001547696	**KCR21004**	
1.4 - 1.7 - 1.8 - 1.9 - 1.9dT		X	92-95	6001548986	**KCR21001**	
19 II Cabriolet						
1.7		X	92-93	6001548986	**KCR21001**	
1.7	X		92-93	6001547696	**KCR21004**	
1.8		X	92-96	6001548986	**KCR21001**	
1.8 - 1.8 16V	X		92-96	6001547696	**KCR21004**	

follow RENAULT

MODELLO MODEL	ASS.ANT. FRONT AXLE	ASS.POS. REAR AXLE	ANNO YEAR	RIF ORIGINALE ORIGINAL REF	RIF CORAM CORAM REF	NOTE NOTES
19 II Chamade						
1.4		X	92-95	7701205778	**KCR21002**	
1.4 - 1.7 - 1.8 - 1.8 16V - 1.9 D - 1.9 dT	X		92-95	6001547696	**KCR21004**	
1.4 - 1.7 - 1.8 - 1.9 D - 1.9 dT		X	92-95	6001548986	**KCR21001**	
19 II Furgonato						
1.9 dT		X	92-95	6001548986	**KCR21001**	
1.9 dT	X		92-95	6001547696	**KCR21004**	
21						
1.4	X		89-93	6001547696	**KCR21004**	
1.7 - 1.9 D	X		89-94	6001547696	**KCR21004**	
21 Station wagon						
1.7	X		86-93	6001547696	**KCR21004**	
1.7 Cat	X		88-93	6001547696	**KCR21004**	
1.9 D	X		86-94	6001547696	**KCR21004**	
2.0	X		90-94	6001547696	**KCR21004**	
21 Tre volumi						
1.7	X		86-94	6001547696	**KCR21004**	
1.9 D	X		89-93	6001547696	**KCR21004**	
2.0	X		86-93	6001547696	**KCR21004**	
9						
1.1		X	81-87	6001548986	**KCR21001**	
1.1		X	81-87	7701205778	**KCR21002**	
1.2		X	85-88	6001548986	**KCR21001**	
1.2		X	85-88	7701205778	**KCR21002**	
1.4 - 1.4 Automatik		X	81-88	7701205778	**KCR21002**	
1.4 - 1.4 Automatik - 1.6 D		X	81-88	6001548986	**KCR21001**	
1.4 Automatik		X	81-85	7701205778	**KCR21002**	
1.4 Turbo - 1.7		X	84-89	6001548986	**KCR21001**	
1.4 Turbo - 1.7		X	84-89	7701205778	**KCR21002**	
1.6 D		X	82-88	7701205778	**KCR21002**	
CAPTUR I						
0.9 Tce 90	X		13->	6001550915	**KCR21101**	SI ABS

follow RENAULT

MODELLO MODEL	ASS.ANT. FRONT AXLE	ASS.POS. REAR AXLE	ANNO YEAR	RIF ORIGINALE ORIGINAL REF	RIF CORAM CORAM REF	NOTE NOTES
CLIO I						
1.1		X	91-98	6001548986	**KCR21001**	
1.1		X	91-98	7701205778	**KCR21002**	
1.2		X	90-96	6001548986	**KCR21001**	
1.2		X	90-98	7701205778	**KCR21002**	
1.2	X		90-98	6001547696	**KCR21004**	
1.4 - 1.8		X	91-98	7701205778	**KCR21002**	
1.4 - 1.8 - 1.9 D		X	91-98	6001548986	**KCR21001**	
1.4 - 1.8 - 1.9 D	X		91-98	6001547696	**KCR21004**	
1.8 16V	X		91-96	6001547696	**KCR21004**	
1.8 Rsi		X	93-98	7701205778	**KCR21002**	
1.8 Rsi	X		93-98	6001547696	**KCR21004**	
Williams	X		94-98	6001547696	**KCR21004**	
CLIO II						
1.2		X	98->	6001548986	**KCR21001**	
1.2		X	98->	7701205778	**KCR21002**	
1.2	X		98->	6001547696	**KCR21004**	
1.2 16V		X	01->	6001548986	**KCR21001**	
1.2 16V		X	01->	7701205778	**KCR21002**	
1.2 16V	X		01->	6001547696	**KCR21004**	
1.2 LPG		X	98-09	6001548986	**KCR21001**	
1.2 LPG		X	98-09	7701205778	**KCR21002**	
1.2 LPG	X		98-09	6001547696	**KCR21004**	
1.4 - 1.6 - 1.9 D		X	98-05	6001548986	**KCR21001**	
1.4 - 1.6 - 1.9 D	X		98-05	6001547696	**KCR21004**	
1.4 16V		X	99-08	6001548986	**KCR21001**	
1.4 16V		X	00-08	7701205778	**KCR21002**	
1.4 16V	X		99-08	6001547696	**KCR21004**	
1.5 dCi		X	01-set	6001548986	**KCR21001**	
1.5 dCi	X		01-set	6001547696	**KCR21004**	
1.6 16V		X	98->	6001548986	**KCR21001**	
1.6 16V	X		98->	6001547696	**KCR21004**	
1.9 dTi		X	99-05	6001548986	**KCR21001**	
1.9 dTi	X		99-05	6001547696	**KCR21004**	
2.0 16V Sport		X	00->	6001548986	**KCR21001**	
2.0 16V Sport	X		00->	6001547696	**KCR21004**	

follow RENAULT

MODELLO MODEL	ASS.ANT. FRONT AXLE	ASS.POS. REAR AXLE	ANNO YEAR	RIF ORIGINALE ORIGINAL REF	RIF CORAM CORAM REF	NOTE NOTES
CLIO II Furgonato						
1.2		X	99-03	6001548986	**KCR21001**	
1.2		X	99-03	7701205778	**KCR21002**	
1.5 dCi		X	01-apr	6001548986	**KCR21001**	
1.5 dCi	X		01-apr	6001547696	**KCR21004**	
1.9 D		X	98->	6001548986	**KCR21001**	
1.9 D	X		98->	6001547696	**KCR21004**	
1.9 Dti		X	00-01	6001548986	**KCR21001**	
1.9 Dti	X		00-01	6001547696	**KCR21004**	
CLIO III						
1.2 16V - 1.4 16V - 1.5 dCi - 1.6 16V		X	05->	6001548986	**KCR21001**	
1.2 16V - 1.4 16V - 1.5 dCi - 1.6 16V	X		05->	6001550915	**KCR21101**	SI ABS
1.2 16V - 1.4 16V - 1.5 dCi - 1.6 16V		X	05->	7701208058	**KCR21008**	
1.2 16V Hi-Flex - 1.2 Ethanol		X	08->	6001548986	**KCR21001**	
1.2 16V Hi-Flex - 1.2 Ethanol	X		08->	6001550915	**KCR21101**	SI ABS
1.2 Ethanol		X	05->	7701208058	**KCR21008**	
1.5 dCi	X		05->	7701207676	**KCR21003**	SI ABS
1.6 16C GT		X	09->	6001548986	**KCR21001**	
1.6 16C GT	X		09->	7701207676	**KCR21003**	SI ABS
2.0 16V	X		06->	7701207676	**KCR21003**	SI ABS
2.0 16V - 2.0 16V Sport		X	06->	6001548986	**KCR21001**	
CLIO III Furgonato						
1.2 - 1.5 dCi		X	mag-14	6001548986	**KCR21001**	
1.2 - 1.5 dCi	X		mag-14	6001550915	**KCR21101**	SI ABS
1.2 - 1.5 dCi		X	mag-14	7701208058	**KCR21008**	
CLIO III Sportour						
1.2 16V - 1.2 16V Hi-Flex - 1.5 dCi - 1.6 16V	X		08->	6001550915	**KCR21101**	SI ABS
1.2 16V - 1.2 16V Hi-Flex - 1.5 dCi - 1.6 16V		X	08->	7701208058	**KCR21008**	
1.4 16V	X		10->	6001550915	**KCR21101**	SI ABS
1.4 16V		X	10->	7701208058	**KCR21008**	
1.5 dCi	X		08-dic	7701207676	**KCR21003**	SI ABS
1.6 16V	X		08->	7701207676	**KCR21003**	SI ABS
CLIO IV						
0.9 Tce 90		X	12->	6001548986	**KCR21001**	
0.9 Tce 90 - 1.2 16V - 1.5 dCi 75 - 1.5 dCi 90	X		12->	6001550915	**KCR21101**	SI ABS
0.9 Tce 90 LPG - 1.5 dCi 110	X		16->	6001550915	**KCR21101**	SI ABS
1.2 Tce 120	X		13->	6001550915	**KCR21101**	SI ABS

follow RENAULT

MODELLO MODEL	ASS.ANT. FRONT AXLE	ASS.POS. REAR AXLE	ANNO YEAR	RIF ORIGINALE ORIGINAL REF	RIF CORAM CORAM REF	NOTE NOTES
CLIO IV Furgonato						
1.2 16V - 1.5 dCi 75 - 1.5 dCi 90	X		14->	6001550915	**KCR21101**	SI ABS
CLIO IV Grandtour						
0.9 Tce 90 - 1.2 16V - 1.2 Tce 120 - 1.5 dCi 75 - 1.5 dCi 90	X		13->	6001550915	**KCR21101**	SI ABS
1.5 dCi 110	X		16->	6001550915	**KCR21101**	SI ABS
CLIO V						
1.0 Tce 100 - 1.5 Blue dCi 115 - 1 .5 Blue dCi 85	X		19->	6001550915	**KCR21101**	SI ABS
ESPACE I						
2.0 i Quadra	X		88-92	6001547696	**KCR21004**	
2.2 Quadra	X		88-90	6001547696	**KCR21004**	
ESPACE IV						
1.9 dCi	X		02-mag	402109697R	**KCR21005**	
2.0	X		feb-15	402109697R	**KCR21005**	
2.0 dCi	X		06->	402109697R	**KCR21005**	
2.0 Turbo - 2.2 dCi - 3.0 dCi - 3.5 V6	X		02->	402109697R	**KCR21005**	
FLUENCE						
1.5 dCi - 1.6 16V - 2.0 16V	X		10->	402108022R	**KCR21102**	SI ABS
Z.E.	X		12->	402108022R	**KCR21102**	SI ABS
GRAND SCENIC II						
1.2 Tce - 1.6 16V Bifuel	X		12->	402108022R	**KCR21102**	SI ABS
1.4 16V - 1.5 dCi - 1.6 16V - 1.6 E85 - 2.0 16V	X		09->	402108022R	**KCR21102**	SI ABS
1.5 dCi	X		04-ago	7701208059	**KCR21006**	
1.5 dCi	X		04-ago	7701207676	**KCR21003**	SI ABS
1.6	X		04-giu	7701208059	**KCR21006**	
1.6	X		04-giu	7701207676	**KCR21003**	SI ABS
1.6 dCi	X		11->	402108022R	**KCR21102**	SI ABS
1.9 dCi - 2.0	X		04-set	7701208059	**KCR21006**	
1.9 dCi - 2.0	X		04-set	7701207676	**KCR21003**	SI ABS
2.0 dCi	X		05-ago	7701208059	**KCR21006**	

follow RENAULT

MODELLO MODEL	ASS.ANT. FRONT AXLE	ASS.POS. REAR AXLE	ANNO YEAR	RIF ORIGINALE ORIGINAL REF	RIF CORAM CORAM REF	NOTE NOTES
KANGOO						
1.2 - 1.4 - D 55 1.9 - D 65 1.9	X		97->	6001547696	**KCR21004**	
1.2 16V - 1.5 dCi - 1.6 16V	X		01->	6001547696	**KCR21004**	
1.6 16V bivalent	X		05->	6001547696	**KCR21004**	
1.9 dTi	X		00->	6001547696	**KCR21004**	
KANGOO BE POP						
1.5 dCi - 1.6	X		09->	6001550915	**KCR21101**	SI ABS
1.5 dCi 75	X		10->	6001550915	**KCR21101**	SI ABS
KANGOO Express						
1.2 - D 55 1.9 - D 65 1.9	X		97->	6001547696	**KCR21004**	
1.2 16V - 1.5 dCi - 1.6 16V	X		01->	6001547696	**KCR21004**	
1.2 Tce 115	X		13->	6001550915	**KCR21101**	SI ABS
1.4	X		97-08	6001547696	**KCR21004**	
1.5 dCi 100 - 1.5 dCi 75	X		10->	6001550915	**KCR21101**	SI ABS
1.5 dCi 105 - 1.5 dCi 70 - 1.5 dCi 85 - 1.6 -	X		08->	6001550915	**KCR21101**	SI ABS
1.5 dCi 90	X		09->	6001550915	**KCR21101**	SI ABS
1.6 16V - 1.6 16V LPG	X		08->	6001550915	**KCR21101**	SI ABS
1.6 16V bivalent	X		05->	6001547696	**KCR21004**	
1.9 D	X		99-03	6001547696	**KCR21004**	
1.9 dCi	X		03->	6001547696	**KCR21004**	
1.9 dTi	X		00->	6001547696	**KCR21004**	
Z.E.	X		11->	6001550915	**KCR21101**	SI ABS
KANGOO/GRAND KANGOO						
1.2 Tce 115	X		13->	6001550915	**KCR21101**	SI ABS
1.5 dCi - 1.5 dCi 105 - 1.5 dCi 75 - 1.5 dCi 85 - 1.5 dCi 90	X		08->	6001550915	**KCR21101**	SI ABS
1.6 - 1.6 16V	X		08->	6001550915	**KCR21101**	SI ABS
KOLEOS I						
2.0 dCi - 2.0 dCi 4x4 - 2.5 - 2.5 4x4	X		08->	40 20 225 60R	**KMR21301**	SI ABS
2.0 dCi - 2.5		X	08->	402022933R	**KMR21302**	SI ABS
LAGUNA I						
1.8 - 2.0	X		93-01	6001547696	**KCR21004**	

follow RENAULT

MODELLO MODEL	ASS.ANT. FRONT AXLE	ASS.POS. REAR AXLE	ANNO YEAR	RIF ORIGINALE ORIGINAL REF	RIF CORAM CORAM REF	NOTE NOTES
LOGAN I						
1.4 - 1.6		X	04->	6001548986	**KCR21001**	
1.4 - 1.6	X		04->	6001550915	**KCR21101**	SI ABS
1.4 - 1.6	X		04->	6001547696	**KCR21004**	
1.5 dCi		X	lug-15	6001548986	**KCR21001**	
1.5 dCi	X		lug-15	6001550915	**KCR21101**	SI ABS
1.5 dCi	X		lug-15	6001547696	**KCR21004**	
LOGAN I Station wagon						
1.4 - 1.6		X	07->	6001548986	**KCR21001**	
1.4 - 1.6	X		07->	6001550915	**KCR21101**	SI ABS
1.4 - 1.6	X		07->	6001547696	**KCR21004**	
1.5 dCi		X	lug-15	6001548986	**KCR21001**	
1.5 dCi	X		lug-15	6001550915	**KCR21101**	SI ABS
1.5 dCi	X		lug-15	6001547696	**KCR21004**	
LOGAN/STEPWAY						
1.2	X		13->	6001550915	**KCR21101**	SI ABS
1.2	X		13->	6001547696	**KCR21004**	
MASTER II Autobus						
1.9 dCi 80 - 2.5 dCi 120	X		01->	7701206740	**KCR20006**	
1.9 dCi 80 - 2.5 dCi 120		X	01->	7701209742	**KCR20005**	
1.9 dTI - 2.2 dCI 90	X		00->	7701206740	**KCR20006**	
1.9 dTI - 2.2 dCI 90		X	00->	7701209742	**KCR20005**	
2.5 D - 2.8 dTI	X		98-01	7701206740	**KCR20006**	
2.5 D - 2.8 dTI	X		98-01	7701209742	**KCR20005**	
2.5 dCi	X		06->	7701206740	**KCR20006**	
2.5 dCi		X	06->	7701209742	**KCR20005**	
2.5 dCi 100 - 3.0 dCi 140	X		03->	7701206740	**KCR20006**	
2.5 dCi 100 - 3.0 dCi 140		X	03->	7701209742	**KCR20005**	

follow RENAULT

MODELLO MODEL	ASS.ANT. FRONT AXLE	ASS.POS. REAR AXLE	ANNO YEAR	RIF ORIGINALE ORIGINAL REF	RIF CORAM CORAM REF	NOTE NOTES
MASTER II Furgonato						
1.9 dCi 80 - 2.5 dCi 120	X		01->	7701206740	**KCR20006**	
1.9 dCi 80 - 2.5 dCi 120		X	01->	7701209742	**KCR20005**	
1.9 dTI - 2.2 dCI 90	X		00->	7701206740	**KCR20006**	
1.9 dTI - 2.2 dCI 90		X	00->	7701209742	**KCR20005**	
2.5 D - 2.8 dTI	X		98-01	7701206740	**KCR20006**	
2.5 D - 2.8 dTI		X	98-01	7701209742	**KCR20005**	
2.5 dCi	X		06->	7701206740	**KCR20006**	
2.5 dCi		X	06->	7701209742	**KCR20005**	
2.5 dCi 100 - 3.0 dCi 140	X		03->	7701206740	**KCR20006**	
2.5 dCi 100 - 3.0 dCi 140		X	03->	7701209742	**KCR20005**	
MASTER II Pianale piatto						
2.2 dCI 90	X		00->	7701206740	**KCR20006**	
2.2 dCI 90		X	00->	7701209742	**KCR20005**	
2.5 D - 2.8 dTI	X		98-01	7701206740	**KCR20006**	
2.5 D - 2.8 dTI		X	98-01	7701209742	**KCR20005**	
2.5 dCi	X		06->	7701206740	**KCR20006**	
2.5 dCi		X	06->	7701209742	**KCR20005**	
2.5 dCi 100 - 3.0 dCi 140	X		03->	7701206740	**KCR20006**	
2.5 dCi 100 - 3.0 dCi 140		X	03->	7701209742	**KCR20005**	
2.5 dCi 120	X		01->	7701206740	**KCR20006**	
2.5 dCi 120		X	01->	7701209742	**KCR20005**	
MASTER III Autobus						
2.3 dCi 100 FWD - 2.3 dCi 125 FWD - 2.3 dCi 145 FWD	X		11->	40 21 037 08R	**KCR21303**	
2.3 dCi 110 FWD - 2.3 dCi 135 FWD - 2.3 dCi 165 FWD	X		11->	40 21 037 08R	**KCR21303**	
2.3 dCi 150 FWD	X		12->	40 21 037 08R	**KCR21303**	
2.3 dCi 170 FWD	X		15->	40 21 037 08R	**KCR21303**	
MASTER III Furgonato						
2.3 dCi 100 FWD - 2.3 dCi 100 RWD	X		10->	40 21 037 08R	**KCR21303**	
2.3 dCi 110 FWD - 2.3 dCi 135 FWD - 2.3 dCi 135 RWD	X		14->	40 21 037 08R	**KCR21303**	
2.3 dCi 125 FWD - 2.3 dCi 125 RWD	X		10->	40 21 037 08R	**KCR21303**	
2.3 dCi 130 FWD	X		16->	40 21 037 08R	**KCR21303**	
2.3 dCi 130 RWD	X		12->	40 21 037 08R	**KCR21303**	
2.3 dCi 145 FWD - 2.3 dCi 145 RWD	X		10->	40 21 037 08R	**KCR21303**	
2.3 dCi 150 FWD - 2.3 dCi 150 RWD	X		13->	40 21 037 08R	**KCR21303**	
2.3 dCi 165 FWD - 2.3 dCi 165 RWD	X		14->	40 21 037 08R	**KCR21303**	
2.3 dCi 170 FWD	X		15->	40 21 037 08R	**KCR21303**	
2.3 dCi 180 FWD	X		19->	40 21 037 08R	**KCR21303**	

follow RENAULT

MODELLO MODEL	ASS.ANT. FRONT AXLE	ASS.POS. REAR AXLE	ANNO YEAR	RIF ORIGINALE ORIGINAL REF	RIF CORAM CORAM REF	NOTE NOTES
MASTER III Pianale piatto						
2.3 dCi 100 FWD - 2.3 dCi 100 RWD	X		10->	40 21 037 08R	**KCR21303**	
2.3 dCi 110 FWD - 2.3 dCi 135 FWD - 2.3 dCi 135 RWD	X		14->	40 21 037 08R	**KCR21303**	
2.3 dCi 125 FWD - 2.3 dCi 125 RWD	X		10->	40 21 037 08R	**KCR21303**	
2.3 dCi 130 FWD	X		12->	40 21 037 08R	**KCR21303**	
2.3 dCi 130 RWD	X		16->	40 21 037 08R	**KCR21303**	
2.3 dCi 145 FWD - 2.3 dCi 145 RWD	X		11->	40 21 037 08R	**KCR21303**	
2.3 dCi 150 FWD - 2.3 dCi 150 RWD	X		13->	40 21 037 08R	**KCR21303**	
2.3 dCi 165 FWD - 2.3 dCi 165 RWD - 2.3 dCi 170 FWD	X		14->	40 21 037 08R	**KCR21303**	
2.3 dCi 180 FWD	X		19->	40 21 037 08R	**KCR21303**	
Z.E.	X		18->	40 21 037 08R	**KCR21303**	
MEGANE CC						
1.2 Tce	X		13->	402108022R	**KCR21102**	SI ABS
1.4 Tce - 1.5 dCi -1.6 16V - 1.9 dCi - 2.0 CVT	X		10->	402108022R	**KCR21102**	SI ABS
1.6 dCi	X		11->	402108022R	**KCR21102**	SI ABS
MEGANE I						
1.4 16V	X		99-03	6001547696	**KCR21004**	
1.4 e - 1.9 D Eco - 1.9 TDI - 1.9 dT - 2.0 16V - 2.0 i	X		96-03	6001547696	**KCR21004**	
1.4 e - 1.9 D Eco - 1.9 TDI - 1.9 dT - 2.0 i		X	96-03	6001548986	**KCR21001**	
1.4 Eco - 1.6 e - 1.6 i		X	96-99	6001548986	**KCR21001**	
1.4 Eco - 1.6 e - 1.6 i	X		96-99	6001547696	**KCR21004**	
1.6 16V		X	99-02	6001548986	**KCR21001**	
1.6 16V	X		99-02	6001547696	**KCR21004**	
1.8 16V - 1.9 dCi	X		01-mar	6001547696	**KCR21004**	
1.9 dCi		X	97-03	6001548986	**KCR21001**	
1.9 dTi	X		97-03	6001547696	**KCR21004**	
MEGANE I Cabriolet						
1.4 16V - 1.6 16V - 2.0 i		X	99-03	6001548986	**KCR21001**	
1.4 16V - 1.6 16V - 2.0 i - 2.0 16V IDE	X		99-03	6001547696	**KCR21004**	
1.6 e		X	96-99	6001548986	**KCR21001**	
1.6 e - 2.0 16V	X		96-99	6001547696	**KCR21004**	
2.0		X	97-03	6001548986	**KCR21001**	
2.0	X		97-03	6001547696	**KCR21004**	
2.0 16V		X	02-mar	6001548986	**KCR21001**	
2.0 16V	X		02-mar	6001547696	**KCR21004**	

follow RENAULT

MODELLO MODEL	ASS.ANT. FRONT AXLE	ASS.POS. REAR AXLE	ANNO YEAR	RIF ORIGINALE ORIGINAL REF	RIF CORAM CORAM REF	NOTE NOTES
MEGANE I Classic						
1.4 - 1.9 D - 1.9 TDI - 1.9 dT - 2.0 i		X	96-03	6001548986	**KCR21001**	
1.4 - 1.9 D - 1.9 TDI - 1.9 dT - 2.0 i	X		96-03	6001547696	**KCR21004**	
1.4 16V - 1.6 16V		X	99-03	6001548986	**KCR21001**	
1.4 16V - 1.6 16V	X		99-03	6001547696	**KCR21004**	
1.6 e - 1.6 i		X	96-99	6001548986	**KCR21001**	
1.6 e - 1.6 i	X		96-99	6001547696	**KCR21004**	
1.8 16V - 1.9 dCi		X	01-mar	6001548986	**KCR21001**	
1.8 16V - 1.9 dCi	X		01-mar	6001547696	**KCR21004**	
1.9 dTi		X	97-03	6001548986	**KCR21001**	
1.9 dTi	X		97-03	6001547696	**KCR21004**	
MEGANE I Coach						
1.4 16V - 1.6 16V		X	99-03	6001548986	**KCR21001**	
1.4 16V - 1.6 16V - 2.0 16V IDE	X		99-03	6001547696	**KCR21004**	
1.6 e		X	96-99	6001548986	**KCR21001**	
1.6 e - 2.0 16V	X		96-99	6001547696	**KCR21004**	
1.9 dCi		X	01-mar	6001548986	**KCR21001**	
1.9 dCi	X		01-mar	6001547696	**KCR21004**	
1.9 dTi		X	97-01	6001548986	**KCR21001**	
1.9 dTi	X		97-01	6001547696	**KCR21004**	
2.0 16V	X		02-mar	6001547696	**KCR21004**	
2.0 i		X	96-03	6001548986	**KCR21001**	
2.0 i	X		96-03	6001547696	**KCR21004**	
MEGANE I Grandtour						
1.4 16V - 1.4 e - 1.6 16V - 1.6 e - 1.9 D - 1.9 dTi	X		99-03	6001547696	**KCR21004**	
1.8 16V - 1.9 dCi	X		01-mar	6001547696	**KCR21004**	
MEGANE I Kombi van						
1.4 - 1.6 - 1.6 BiFuel - 1.8 - 1.9 DTI - 1.9 dCi	X		01-mar	6001547696	**KCR21004**	
1.9 D	X		0	6001547696	**KCR21004**	

follow RENAULT

MODELLO MODEL	ASS.ANT. FRONT AXLE	ASS.POS. REAR AXLE	ANNO YEAR	RIF ORIGINALE ORIGINAL REF	RIF CORAM CORAM REF	NOTE NOTES
MEGANE II						
1.4 16V - - 1.6 16V - - 2.0 16V		X	02-ago	7701208058	**KCR21008**	
1.4 16V - 1.5 dCi - 1.6 16V - 2.0 16V	X		02-ago	6001550915	**KCR21101**	SI ABS
1.5 dCi	X		05-ago	7701207676	**KCR21003**	SI ABS
1.6	X		05-ago	6001550915	**KCR21101**	SI ABS
1.6		X	05-ago	7701208058	**KCR21008**	
1.6 Flex-Fuel	X		07-ago	6001550915	**KCR21101**	SI ABS
1.6 Flex-Fuel		X	07-ago	7701208058	**KCR21008**	
1.9 dCi	X		02-set	7701207676	**KCR21003**	SI ABS
2.0		X	06-ago	7701208058	**KCR21008**	
2.0	X		06-ago	7701207676	**KCR21003**	SI ABS
2.0	X		06-ago	402109697R	**KCR21005**	
2.0 16V Turbo		X	04-ago	7701208058	**KCR21008**	
2.0 16V Turbo	X		04-ago	7701207676	**KCR21003**	SI ABS
2.0 dCi		X	05-ago	7701208059	**KCR21006**	
2.0 dCi	X		07-ago	402109697R	**KCR21005**	
2.0 Renault Sport		X	04-set	7701208058	**KCR21008**	
2.0 Renault Sport	X		04-set	402109697R	**KCR21005**	
MEGANE II Coupé-Cabiolet						
1.5 dCi		X	06-set	7701208058	**KCR21008**	
1.5 dCi	X		06-set	7701207676	**KCR21003**	SI ABS
1.6 - 2.0	X		03-ago	6001550915	**KCR21101**	SI ABS
1.6 - 2.0 - 1.9 dCi		X	03-set	7701208058	**KCR21008**	
1.6 16V	X		06-ago	6001550915	**KCR21101**	SI ABS
1.6 16V		X	06-ago	7701208058	**KCR21008**	
1.9 dCi	X		03-set	7701207676	**KCR21003**	SI ABS
2.0 16V Turbo		X	04-set	7701208058	**KCR21008**	
2.0 16V Turbo	X		04-set	7701207676	**KCR21003**	SI ABS
2.0 dCi		X	05-set	7701208059	**KCR21006**	

follow RENAULT

MODELLO MODEL	ASS.ANT. FRONT AXLE	ASS.POS. REAR AXLE	ANNO YEAR	RIF ORIGINALE ORIGINAL REF	RIF CORAM CORAM REF	NOTE NOTES
MEGANE II Station wagon						
1.4 - 1.5 dCi - 1.6 - 1.6 16V - 2.0	X		03-set	6001550915	**KCR21101**	SI ABS
1.4 - 1.5 dCi - 1.6 - 1.9 dCi - 2.0		X	03-set	7701208059	**KCR21006**	
1.4 - 1.6 - - 2.0		X	03->	7701208058	**KCR21008**	
1.5 dCi		X	03-ott	7701208058	**KCR21008**	
1.5 dCi - 1.9 dCi	X		03-set	7701207676	**KCR21003**	SI ABS
1.6 16V		X	06->	7701208058	**KCR21008**	
1.6 16V		X	06-set	7701208059	**KCR21006**	
1.6 16V Hi-Flex	X		08-set	6001550915	**KCR21101**	SI ABS
1.6 16V Hi-Flex		X	08-set	7701208059	**KCR21006**	
1.9 dCi	X		03-set	7701208059	**KCR21006**	
2.0		X	03-set	7701208058	**KCR21008**	
2.0 dCi		X	05-set	7701208059	**KCR21006**	
MEGANE II Tre volumi						
1.4 - 1.6 - 2.0	X		03->	6001550915	**KCR21101**	SI ABS
1.5 dCi	X		03-ott	6001550915	**KCR21101**	SI ABS
1.6 16V	X		06->	6001550915	**KCR21101**	SI ABS
1.9 dCi	X		03->	7701207676	**KCR21003**	SI ABS
MEGANE III 2 volumi						
1.2 Tce	X		12->	402108022R	**KCR21102**	SI ABS
1.4 Tce - 2.0 CVT	X		09->	402108022R	**KCR21102**	SI ABS
1.5 dCi - 1.6 16V - 1.9 dCi	X		08->	402108022R	**KCR21102**	SI ABS
1.6 16V BiFuel	X		set-15	402108022R	**KCR21102**	SI ABS
1.6 16V Hi-Flex	X		ago-15	402108022R	**KCR21102**	SI ABS
1.6 dCi	X		11->	402108022R	**KCR21102**	SI ABS
MEGANE III Coupé						
1.2 Tce	X		12->	402108022R	**KCR21102**	SI ABS
1.4 Tce - 2.0 CVT	X		09->	402108022R	**KCR21102**	SI ABS
1.5 dCi - 1.6 16V - 1.6 16V Bifuel - 1.9 dCi	X		08->	402108022R	**KCR21102**	SI ABS
1.6 dCi	X		11->	402108022R	**KCR21102**	SI ABS
MEGANE III Grandtour						
1.2 Tce	X		12->	402108022R	**KCR21102**	SI ABS
1.4 Tce - 1.5 dCi - 1.6 16V - 1.9 dCi - 2.0 CVT	X		09->	402108022R	**KCR21102**	SI ABS
1.6 Bifuel	X		08->	402108022R	**KCR21102**	SI ABS
1.6 dCi	X		11->	402108022R	**KCR21102**	SI ABS

follow RENAULT

MODELLO MODEL	ASS.ANT. FRONT AXLE	ASS.POS. REAR AXLE	ANNO YEAR	RIF ORIGINALE ORIGINAL REF	RIF CORAM CORAM REF	NOTE NOTES
MEGANE IV 2 volumi						
1.2 Tce 100 - 1.2 Tce 130 - 1.5 dCi 110 - 1.5 dCi 90 - 1.6 dCi 165	X		15->	402108022R	**KCR21102**	SI ABS
1.3 Tce 115 - 1.3 Tce 140	X		18->	402108022R	**KCR21102**	SI ABS
MEGANE IV Sporter						
1.2 Tce 100 - 1.2 Tce 130 - 1.5 dCi 110 - 1.5 dCi 90	X		16->	402108022R	**KCR21102**	SI ABS
1.3 Tce 115 - 1.3 Tce 140	X		18->	402108022R	**KCR21102**	SI ABS
1.6 16V - 1.6 Tce 205 - 1.6 dCi 130 - 1.6 dCi 165	X		16->	402108022R	**KCR21102**	SI ABS
MEGANE Scenic						
1.4 i - 1.6 i - 1.9 D - 1.9 dT - 1.9 dTi - 2.0 i	X		97-99	6001547696	**KCR21004**	
1.6 16V - 1.6 e	X		96-99	6001547696	**KCR21004**	
MODUS/GRAND MODUS						
1.2 - 1.4 - 1.5 dCi - 1.6		X	04->	6001548986	**KCR21001**	
1.2 - 1.4 - 1.5 dCi - 1.6	X		04->	6001550915	**KCR21101**	SI ABS
1.2 - 1.4 - 1.5 dCi - 1.6		X	04->	7701208058	**KCR21008**	
1.2 16V		X	07->	6001548986	**KCR21001**	
1.2 16V	X		07->	6001550915	**KCR21101**	SI ABS
1.2 16V		X	07->	7701208058	**KCR21008**	
1.2 16V Hi-Flex		X	08->	6001548986	**KCR21001**	
1.2 16V Hi-Flex	X		08->	6001550915	**KCR21101**	SI ABS
1.2 16V Hi-Flex		X	08->	7701208058	**KCR21008**	
1.5 dCi	X		04->	7701207676	**KCR21003**	SI ABS
1.5 dCi 75 - 1.5 dCi 90		X	10->	6001548986	**KCR21001**	
1.5 dCi 75 - 1.5 dCi 90	X		10->	6001550915	**KCR21101**	SI ABS
1.5 dCi 75 - 1.5 dCi 90		X	10->	7701208058	**KCR21008**	
RAPID Furgonato						
1.0		X	86-92	7701205778	**KCR21002**	
1.0	X		86-92	6001547696	**KCR21004**	
1.2 - 1.4		X	91-98	7701205778	**KCR21002**	
1.2 - 1.4	X		91-98	6001547696	**KCR21004**	
1.4 Cat		X	88-98	7701205778	**KCR21002**	
1.6 D		X	86-98	7701205778	**KCR21002**	
1.6 D	X		86-98	6001547696	**KCR21004**	
1.9 D		X	94-98	7701205778	**KCR21002**	
1.9 D	X		94-98	6001547696	**KCR21004**	

follow RENAULT

MODELLO MODEL	ASS.ANT. FRONT AXLE	ASS.POS. REAR AXLE	ANNO YEAR	RIF ORIGINALE ORIGINAL REF	RIF CORAM CORAM REF	NOTE NOTES
SCENIC I MPV / Space wagon						
1.4 16V - 1.6 - 1.9 dCi - 1.9 dTi - 2.0 16V	X		99-03	6001547696	**KCR21004**	
1.8 16V	X		01-mar	6001547696	**KCR21004**	
1.8 4x4	X		00-01	6001547696	**KCR21004**	
1.9 D	X		99-01	6001547696	**KCR21004**	
SCENIC II						
1.4 - 1.5 dCi - 1.9 dCi		X	03-ago	7701208059	**KCR21006**	
1.4 - 1.5 dCi - 1.9 dCi	X		03-ago	7701207676	**KCR21003**	SI ABS
1.6		X	03-giu	7701208059	**KCR21006**	
1.6	X		03-giu	7701207676	**KCR21003**	SI ABS
1.6 16V	X		05-ago	7701207676	**KCR21003**	SI ABS
1.6 16V - 2.0 dCi		X	05-ago	7701208059	**KCR21006**	
1.9 D		X	06-ago	7701208059	**KCR21006**	
1.9 D	X		06-ago	7701207676	**KCR21003**	SI ABS
2.0		X	03-set	7701208059	**KCR21006**	
2.0	X		03-set	7701207676	**KCR21003**	SI ABS
2.0 16V Turbo		X	04-ago	7701208059	**KCR21006**	
2.0 16V Turbo	X		04-ago	7701207676	**KCR21003**	SI ABS
SCENIC III						
1.2 Tce	X		12->	402108022R	**KCR21102**	SI ABS
1.4 16V - 1.5 dCi - 1.6 16V - 1.6 16V Bifuel - 1.6 E85 - 2.0 16V	X		09->	402108022R	**KCR21102**	SI ABS
16 dCi	X		11->	402108022R	**KCR21102**	SI ABS
SUPER 5						
1.0		X	84-88	6001548986	**KCR21001**	
1.0		X	84-88	7701205778	**KCR21002**	
1.1		X	84-95	6001548986	**KCR21001**	
1.1		X	84-95	7701205778	**KCR21002**	
1.4		X	84-90	6001548986	**KCR21001**	
1.4		X	84-90	7701205778	**KCR21002**	
1.4 Cat		X	85-96	6001548986	**KCR21001**	
1.4 Cat		X	85-96	7701205778	**KCR21002**	
1.4 Turbo		X	85-90	7701205778	**KCR21002**	
1.6 D		X	85-96	6001548986	**KCR21001**	
1.6 D		X	85-96	7701205778	**KCR21002**	
1.7		X	86-95	6001548986	**KCR21001**	
1.7		X	86-95	7701205778	**KCR21002**	
1.7 i		X	86-91	6001548986	**KCR21001**	
1.7 i		X	86-91	7701205778	**KCR21002**	

follow RENAULT

MODELLO MODEL	ASS.ANT. FRONT AXLE	ASS.POS. REAR AXLE	ANNO YEAR	RIF ORIGINALE ORIGINAL REF	RIF CORAM CORAM REF	NOTE NOTES
SUPER 5 Furgonato						
1.4		X	85-87	6001548986	**KCR21001**	
1.4		X	85-87	7701205778	**KCR21002**	
THALIA I						
1.2 16V		X	02->	6001548986	**KCR21001**	
1.2 16V		X	02->	7701205778	**KCR21002**	
1.4		X	00->	7701205778	**KCR21002**	
1.4 - 1.4 16V		X	00->	6001548986	**KCR21001**	
1.4 16V	X		00->	6001547696	**KCR21004**	
1.5 dCi		X	01-set	6001548986	**KCR21001**	
1.5 dCi	X		01-set	6001547696	**KCR21004**	
TRAFIC II Autobus						
1.9 Dci 100 - 1.9 dCI 80 - 2.0	X		01->	402109697R	**KCR21005**	
2.0 16V - 2.0 dCi 115 - 2.0 dCi 90 - 2.5 dCi145	X		06->	402109697R	**KCR21005**	
2.5 dCi 135	X		03->	402109697R	**KCR21005**	
TRAFIC II Furgonato						
1.9 Dci 100 - 1.9 dCI 80 - 2.0	X		01->	402109697R	**KCR21005**	
2.0 16V - 2.0 dCi 115 - 2.0 dCi 90 - 2.5 dCi145	X		06->	402109697R	**KCR21005**	
2.5 dCi 135	X		03->	402109697R	**KCR21005**	
TRAFIC II Pianale piatto						
1.9 Dci 100 - 1.9 dCI 80 - 2.0 - 2.5 dCi 135	X		01->	402109697R	**KCR21005**	
2.0 16V - 2.0 dCi 115 - 2.0 dCi 90 - 2.5 dCi145	X		06->	402109697R	**KCR21005**	
TWINGO I						
1.2		X	93-07	6001548986	**KCR21001**	
1.2		X	93-07	7701205778	**KCR21002**	
1.2 16V		X	01-lug	6001548986	**KCR21001**	
1.2 16V		X	01-ago	7701205778	**KCR21002**	
1.2 LPG		X	03-lug	6001548986	**KCR21001**	
1.2 LPG		X	03-lug	7701205778	**KCR21002**	

follow RENAULT

MODELLO MODEL	ASS.ANT. FRONT AXLE	ASS.POS. REAR AXLE	ANNO YEAR	RIF ORIGINALE ORIGINAL REF	RIF CORAM CORAM REF	NOTE NOTES
TWINGO II						
1.2 - 1.2 16V - 1.2 Turbo - 1.5 dCi		X	07->	6001548986	**KCR21001**	
1.2 - 1.2 16V - 1.2 Turbo - 1.5 dCi	X		07->	6001550915	**KCR21101**	SI ABS
1.2 Tce 100		X	11->	6001548986	**KCR21001**	
1.2 Tce 100	X		11->	6001550915	**KCR21101**	SI ABS
1.5 dCi 75 - 1.5 dCi 90		X	10->	6001548986	**KCR21001**	
1.5 dCi 75 - 1.5 dCi 90	X		10->	6001550915	**KCR21101**	SI ABS
1.6 RS		X	08->	7701208058	**KCR21008**	
1.6 RS	X		08->	7701207676	**KCR21003**	SI ABS
TWINGO II Cassone						
1.2 - 1.5 dCi		X	ott-14	6001548986	**KCR21001**	
1.2 - 1.5 dCi	X		ott-14	6001550915	**KCR21101**	SI ABS
TWIZY						
45 - 80	X		12->	6001548986	**KCR21001**	
VEL SATIS						
2.0 16 V Turbo	X		04->	402109697R	**KCR21005**	
2.0 16V Turbo - 2.2 dCi - 3.0 dCi - 3.5 V6	X		02->	402109697R	**KCR21005**	
2.0 dCi	X		05->	402109697R	**KCR21005**	
WIND						
1.2 - 1.6		X	10->	7701208058	**KCR21008**	
1.2 - 1.6	X		10->	7701207676	**KCR21003**	SI ABS
1.2 TCe		X	11->	7701208058	**KCR21008**	
1.2 TCe	X		11->	7701207676	**KCR21003**	SI ABS
ZOE						
ZOE	X		12->	6001550915	**KCR21101**	SI ABS

RENAULT TRUCKS

MODELLO MODEL	ASS.ANT. FRONT AXLE	ASS.POS. REAR AXLE	ANNO YEAR	RIF ORIGINALE ORIGINAL REF	RIF CORAM CORAM REF	NOTE NOTES
D-Serie						
10 P 210 - 10 P 240		X	13->	7485139097	**KCR12802**	
12 P 210 - 12 P 240 - 12 P 250 - 12 P 280		X	13->	7485139097	**KCR12802**	
13 P 210, 13 KP 210 - 13 P 240, 13 KP 240		X	13->	7485139097	**KCR12802**	
13 P 250, 13 KP 250 - 13 P 280, 13 KP 280		X	13->	7485139097	**KCR12802**	
14 P 210, 14 KP 210 - 14 P 240, 14 KP 240		X	13->	7485139097	**KCR12802**	
14 P 250, 14 KP 250 - 14 P 280, 14 KP 280		X	13->	7485139097	**KCR12802**	
16 P 210, 16 KP 210 - 16 P 240, 16 KP 240		X	13->	7485139097	**KCR12802**	
16 P 250, 16 KP 250 - 16 P 280, 16 KP 280		X	13->	7485139097	**KCR12802**	
18 P 250, 18 KP 250 - 18 P 280, 18 KP 280 - 18 P 320, 18 KP 320		X	13->	7485139097	**KCR12802**	
18 T 280 - 18 T 320		X	13->	7485139097	**KCR12802**	
25 P 250 - 25 P 280 - 25 P 320		X	13->	7485139097	**KCR12802**	
26 P 250, 26 KP 250 - 26 P 280, 26 KP 280		X	13->	7485139097	**KCR12802**	
26 P 320, 26 KP320		X	13->	7485139097	**KCR12802**	

ROVER

MODELLO MODEL	ASS.ANT. FRONT AXLE	ASS.POS. REAR AXLE	ANNO YEAR	RIF ORIGINALE ORIGINAL REF	RIF CORAM CORAM REF	NOTE NOTES
75						
1.8 - 2.0 CDT - 2.0 V6 - 2.5 V6		X	99-05	GHK 1692	**KCR25201**	
1.8 Turbo - 2.0 CDTi		X	03-mag	GHK 1692	**KCR25201**	
1.8 Turbo - 2.0 CDTi		X	03-mag	GHK 1692	**KCR25201**	
75 Tourer						
1.8 - 2.0 CDT - 2.0 V6 - 2.5 V6		X	01-mag	GHK 1692	**KCR25201**	

SAAB

MODELLO MODEL	ASS.ANT. FRONT AXLE	ASS.POS. REAR AXLE	ANNO YEAR	RIF ORIGINALE ORIGINAL REF	RIF CORAM CORAM REF	NOTE NOTES
09-mag						
1.6 Turbo - 2.0 TTiD - 2.0 TiD - 2.0 Turbo - 2.0 t BioPower		X	10-dic	13502785	**KMR20008**	SI ABS
2.0 t - 2.3 t		X	97-09	1604002	**KMR20002**	SI ABS
3.0 V6t		X	98-09	1604002	**KMR20002**	SI ABS

follow SAAB

MODELLO MODEL	ASS.ANT. FRONT AXLE	ASS.POS. REAR AXLE	ANNO YEAR	RIF ORIGINALE ORIGINAL REF	RIF CORAM CORAM REF	NOTE NOTES
09-mar						
1.8 i - 1.9 TiD	X		apr-15	12799815	**KMR12006**	SI ABS
1.8 i - 1.9 TiD		X	apr-15	1604314	**KMR20005**	SI ABS
1.8t - 2.0 t - 2.0 t BioPower - 2.2 TiD	X		feb-15	12799815	**KMR12006**	SI ABS
1.8t - 2.0 t - 2.0 t BioPower - 2.2 TiD		X	feb-15	1604314	**KMR20005**	SI ABS
1.8t BioPower	X		set-15	12799815	**KMR12006**	SI ABS
1.8t BioPower		X	set-15	1604314	**KMR20005**	SI ABS
1.9 TTiD		X	lug-15	1604314	**KMR20005**	SI ABS
1.9 TTiD - 2.0 t XWD - 2.8 Turbo V6	X		lug-15	12799815	**KMR12006**	SI ABS
2.0 SE Turbo - 2.0 Turbo - 2.0 i - 2.2 TiD - 2.3 Turbo - 2.3 i		X	98-02	1604002	**KMR20002**	SI ABS
2.0 Turbo XWD - 2.0 t BioPower XWD	X		ago-15	12799815	**KMR12006**	SI ABS
2.8 Turbo V6		X	mag-15	1604314	**KMR20005**	SI ABS
2.8 Turbo V6 XWD	X		08-nov	12799815	**KMR12006**	SI ABS
900 I						
2.0 -16 - 2.0 Turbo-16 S Cat		X	89-93	1604002	**KMR20002**	SI ABS
2.0 S Turbo-16		X	85-93	1604002	**KMR20002**	SI ABS
2.1 -16		X	90-93	1604002	**KMR20002**	SI ABS
900 I Combi Coupe						
2.0 Turbo-16		X	85-94	1604002	**KMR20002**	SI ABS
2.0 Turbo-16 S Cat		X	89-93	1604002	**KMR20002**	SI ABS
900 II						
2.0 -16 Turbo - 2.0 i - 2.3 -16 - 2.5-24 V6		X	93-98	1604002	**KMR20002**	SI ABS
900 II Cabriolet						
2.0 -16 Turbo - 2.0 i - 2.3 -16 - 2.5-24 V6		X	93-98	1604002	**KMR20002**	SI ABS
900 II Coupè						
2.0 -16 Turbo - 2.0 i - 2.3 -16 - 2.5-24 V6		X	93-98	1604002	**KMR20002**	SI ABS

follow SAAB

MODELLO MODEL	ASS.ANT. FRONT AXLE	ASS.POS. REAR AXLE	ANNO YEAR	RIF ORIGINALE ORIGINAL REF	RIF CORAM CORAM REF	NOTE NOTES
9-3 Cabriolet						
1.8 i - 1.9 TiD	X		apr-15	12799815	**KMR12006**	SI ABS
1.8 i - 1.9 TiD - 2.0 Turbo Performance		X	apr-15	1604314	**KMR20005**	SI ABS
1.8 t - 2.0 t	X		mar-15	12799815	**KMR12006**	SI ABS
1.8 t - 2.0 t		X	mar-15	1604314	**KMR20005**	SI ABS
1.8t BioPower - 1.9 TTiD - 2.0 t BioPwer		X	lug-15	1604314	**KMR20005**	SI ABS
1.8t BioPower - 1.9 TTiD - 2.0 t BioPwer - 2.8 Turbo V6	X		lug-15	12799815	**KMR12006**	SI ABS
2.0 SE Turbo - 2.0 Turbo - 2.0 i - 2.3 i		X	98-03	1604002	**KMR20002**	SI ABS
2.3 Turbo		X	99-03	1604002	**KMR20002**	SI ABS
2.8 Turbo V6		X	giu-15	1604314	**KMR20005**	SI ABS
9-3 Station wagon						
1.8 i - 1.8t 2.0 - 1.9 TiD - 2.0 t - 2.8 Turbo V6	X		mag-15	12799815	**KMR12006**	SI ABS
1.8 i - 1.8t 2.0 - 1.9 TiD - 2.0 t - 2.8 Turbo V6		X	mag-15	1604314	**KMR20005**	SI ABS
1.9 TTiD - 2.0 t BioPower		X	lug-15	1604314	**KMR20005**	SI ABS
1.9 TTiD - 2.0 t BioPower - 2.0 t BioPower XWD - 2.0 t XWD	X		lug-15	12799815	**KMR12006**	SI ABS
2.8 Turbo V6 XWD	X		08-nov	12799815	**KMR12006**	SI ABS
9-3X						
1.9 TTiD AWD - 2.0 t BioPwer XWD	X		09-dic	12799815	**KMR12006**	SI ABS
2.0 t XWD	X		set-15	12799815	**KMR12006**	SI ABS
9-5 Station wagon						
2.0 t - 2.3 t - 3.0 V6t		X	98-09	1604002	**KMR20002**	SI ABS
2.3 Turbo		X	99-01	1604002	**KMR20002**	SI ABS

SEAT

MODELLO MODEL	ASS.ANT. FRONT AXLE	ASS.POS. REAR AXLE	ANNO YEAR	RIF ORIGINALE ORIGINAL REF	RIF CORAM CORAM REF	NOTE NOTES
ALHAMBRA						
1.4 TSI - 2.0 TSI	X		10->	1T0498621	**KMR27001**	SI ABS
1.8 T 20V		X	97-10	1001719	**KCR27201**	
1.8 TSI - 2.0 TDI	X		12->	1T0498621	**KMR27001**	SI ABS
1.9 TDI - 2.0 i		X	96-10	1001719	**KCR27201**	
2.0 TDI		X	05-ott	1001719	**KCR27201**	
2.0 TDI 4drive	X		11->	1T0498621	**KMR27001**	SI ABS
2.8 V6		X	00-10	1001719	**KCR27201**	

follow SEAT

MODELLO MODEL	ASS.ANT. FRONT AXLE	ASS.POS. REAR AXLE	ANNO YEAR	RIF ORIGINALE ORIGINAL REF	RIF CORAM CORAM REF	NOTE NOTES
ALTEA						
1.2 TSI	X		10	1T0498621	**KMR27001**	SI ABS
1.2 TSI	X		10	1K0498621	**KMR27002**	SI ABS
1.4 16V	X		06->	1T0498621	**KMR27001**	SI ABS
1.4 16V	X		06->	1K0498621	**KMR27002**	SI ABS
1.4 TSI - 1.8 TFSI	X		07->	1T0498621	**KMR27001**	SI ABS
1.4 TSI - 1.8 TFSI	X		07->	1K0498621	**KMR27002**	SI ABS
1.6 - 1.9 TDI - 2.0 TDI 16V	X		04->	1T0498621	**KMR27001**	SI ABS
1.6 - 1.9 TDI - 2.0 TDI 16V	X		04->	1K0498621	**KMR27002**	SI ABS
1.6 LPG - 1.6 TDI	X		09->	1T0498621	**KMR27001**	SI ABS
1.6 LPG - 1.6 TDI	X		09->	1K0498621	**KMR27002**	SI ABS
2.0 FSI - 2.0 TDI	X		04-set	1T0498621	**KMR27001**	SI ABS
2.0 FSI - 2.0 TDI	X		04-set	1K0498621	**KMR27002**	SI ABS
2.0 TFSI	X		06-set	1T0498621	**KMR27001**	SI ABS
2.0 TFSI	X		06-set	1K0498621	**KMR27002**	SI ABS
ALTEA XL						
1.2 TSI - 2.0 TDI 16V 4x4	X		10	1T0498621	**KMR27001**	SI ABS
1.2 TSI - 2.0 TDI 16V 4x4	X		10	1K0498621	**KMR27002**	SI ABS
1.4 16V	X		06->	1T0498621	**KMR27001**	SI ABS
1.4 16V	X		06->	1K0498621	**KMR27002**	SI ABS
1.4 TSI - 1.8 TFSI - 2.0 TDI 4x4 - 2.0 TFSI 4x4	X		07->	1T0498621	**KMR27001**	SI ABS
1.4 TSI - 1.8 TFSI - 2.0 TDI 4x4 - 2.0 TFSI 4x4	X		07->	1K0498621	**KMR27002**	SI ABS
1.6 - 1.9 TDI - 2.0 TDI - 2.0 TDI 16V	X		06->	1T0498621	**KMR27001**	SI ABS
1.6 - 1.9 TDI - 2.0 TDI - 2.0 TDI 16V	X		06->	1K0498621	**KMR27002**	SI ABS
1.6 LPG - 1.6 TDI	X		09->	1T0498621	**KMR27001**	SI ABS
1.6 LPG - 1.6 TDI	X		09->	1K0498621	**KMR27002**	SI ABS
2.0 FSI	X		06-set	1T0498621	**KMR27001**	SI ABS
2.0 FSI	X		06-set	1K0498621	**KMR27002**	SI ABS
AROSA						
1.0 - 1.4 - 1.7 SDI	X		97-04	6N0498625	**KCR27001**	
1.0 - 1.4 - 1.7 SDI		X	97-04	6X0598477	**KMR27202**	SI ABS
1.0 - 1.4 - 1.7 SDI		X	97-04	191598625	**KCR529**	
1.4 16V - 1.4 TDI	X		00-04	6N0498625	**KCR27001**	
1.4 16V - 1.4 TDI		X	00-04	6X0598477	**KMR27202**	SI ABS
ATECA						
1.4 TSI 4Drive - 2.0 TDI 4Drive		X	16->	1K0498621	**KMR27002**	SI ABS
2.0 TSI 4Drive		X	17->	1K0498621	**KMR27002**	SI ABS

follow SEAT

MODELLO MODEL	ASS.ANT. FRONT AXLE	ASS.POS. REAR AXLE	ANNO YEAR	RIF ORIGINALE ORIGINAL REF	RIF CORAM CORAM REF	NOTE NOTES
CORDOBA						
1.0 i - 1.4 i 16V - 1.9 SDI - 1.9 TDI		X	96-02	191598625	**KCR529**	
1.0 i - 1.4 i 16V - 1.9 TDI		X	96-02	6X0598477	**KMR27202**	
1.0 i - 1.4 i 16V - 1.9 TDI	X		96-02	357498625B	**KCR27002**	
1.2	X		02-giu	6C0407621	**KMR27102**	SI ABS
1.2		X	02-giu	6Q0598611	**KMR27103**	
1.2 12V - 1.6 16V	X		06-set	6C0407621	**KMR27102**	SI ABS
1.2 12V - 1.6 16V		X	06-set	6Q0598611	**KMR27103**	
1.4 16V	X		00-02	357498625B	**KCR27002**	
1.4 16V - 1.4 TDI - 1.9 SDI - 1.9 TDI - 2.0	X		02-set	6C0407621	**KMR27102**	SI ABS
1.4 16V - 1.4 TDI - 1.9 SDI - 1.9 TDI - 2.0		X	02-set	6Q0598611	**KMR27103**	
1.4 i		X	94-02	6X0598477	**KMR27202**	SI ABS
1.4 i	X		94-02	357498625B	**KCR27002**	
1.4 i		X	94-02	191598625	**KCR529**	
1.6	X		03-set	6C0407621	**KMR27102**	SI ABS
1.6		X	03-set	6Q0598611	**KMR27103**	
1.6 i - 1.8 i		X	93-02	6X0598477	**KMR27202**	SI ABS
1.6 i - 1.8 i	X		93-02	357498625B	**KCR27002**	
1.6 i - 1.8 i		X	93-02	191598625	**KCR529**	
1.8 i 16V - 1.9 D - 1.9 TD	X		93-96	357498625B	**KCR27002**	
1.8 i 16V - 1.9 D - 1.9 TD		X	93-96	191598625	**KCR529**	
1.9 SDI	X		96-02	357498625B	**KCR27002**	
1.9 SDI - 2.0 i 16V		X	96-99	6X0598477	**KMR27202**	SI ABS
2.0 i		X	93-99	6X0598477	**KMR27202**	SI ABS
2.0 i	X		93-99	357498625B	**KCR27002**	
2.0 i		X	93-99	191598625	**KCR529**	
2.0 i 16V	X		96-99	357498625B	**KCR27002**	
2.0 i 16V		X	96-99	191598625	**KCR529**	
CORDOBA Vario						
1.4	X		0	357498625B	**KCR27002**	
1.4 16V	X		99-02	357498625B	**KCR27002**	
1.4 i - 1.6 i - 1.9 TDI		X	96-02	6X0598477	**KMR27202**	SI ABS
1.4 i - 1.6 i - 1.9 TDI	X		96-02	357498625B	**KCR27002**	
1.4 i - 1.6 i - 1.9 TDI		X	96-02	191598625	**KCR529**	
1.9 SDI		X	96-99	6X0598477	**KMR27202**	SI ABS
1.9 SDI	X		96-99	357498625B	**KCR27002**	
1.9 SDI		X	96-100	191598625	**KCR529**	
CORDOBA VARIO cassone						
1.9 TDI	X		00-02	357498625B	**KCR27002**	

follow SEAT

MODELLO MODEL	ASS.ANT. FRONT AXLE	ASS.POS. REAR AXLE	ANNO YEAR	RIF ORIGINALE ORIGINAL REF	RIF CORAM CORAM REF	NOTE NOTES
EXEO						
1.6	X		09-ott	8E0498625B	**KMR27004**	
1.6		X	09-ott	8E0598611B	**KMR27005**	SI ABS
1.8 T	X		08-ott	8E0498625B	**KMR27004**	
1.8 T		X	08-ott	8E0598611B	**KMR27005**	SI ABS
1.8 TSI	X		ott-13	8E0498625B	**KMR27004**	
1.8 TSI		X	ott-13	8E0598611B	**KMR27005**	SI ABS
2.0 TDI	X		ago-13	8E0498625B	**KMR27004**	
2.0 TDI		X	ago-13	8E0598611B	**KMR27005**	SI ABS
2.0 TFSI	X		set-13	8E0498625B	**KMR27004**	
2.0 TFSI		X	set-13	8E0598611B	**KMR27005**	SI ABS
EXEO ST						
1.6 - 1.8 T	X		09-ott	8E0498625B	**KMR27004**	
1.6 - 1.8 T		X	09-ott	8E0598611B	**KMR27005**	SI ABS
1.8 TSI	X		ott-13	8E0498625B	**KMR27004**	
1.8 TSI		X	ott-13	8E0598611B	**KMR27005**	SI ABS
2.0 TDI - 2.0 TFSI	X		set-13	8E0498625B	**KMR27004**	
2.0 TDI - 2.0 TFSI		X	set-13	8E0598611B	**KMR27005**	SI ABS
FURA						
0.9 - 1.4	X		82-86	025 140 301 A	**KCR12012**	

follow SEAT

MODELLO MODEL	ASS.ANT. FRONT AXLE	ASS.POS. REAR AXLE	ANNO YEAR	RIF ORIGINALE ORIGINAL REF	RIF CORAM CORAM REF	NOTE NOTES
IBIZA II						
1.0 - 1.8 i 16V - 1.9 D - 1.9 TD	X		93-96	357498625B	**KCR27002**	
1.0 - 1.8 i 16V - 1.9 D - 1.9 TD		X	93-96	191598625	**KCR529**	
1.0 i - 1.9 SDI - 1.9 TDI		X	96-02	6X0598477	**KMR27202**	
1.0 i - 1.9 SDI - 1.9 TDI	X		96-02	357498625B	**KCR27002**	
1.0 i - 1.9 SDI - 1.9 TDI		X	96-02	191598625	**KCR529**	
1.3 i - 1.8 i - 2.0 i		X	93-99	6X0598477	**KMR27202**	
1.3 i - 1.8 i - 2.0 i	X		93-99	357498625B	**KCR27002**	
1.3 i - 1.8 i - 2.0 i		X	93-99	191598625	**KCR529**	
1.4 16V - 1.8 T 20V Cupra		X	00-02	6X0598477	**KMR27202**	
1.4 16V - 1.8 T 20V Cupra	X		00-02	357498625B	**KCR27002**	
1.4 i - 1.6 i		X	93-02	6X0598477	**KMR27202**	
1.4 i - 1.6 i	X		93-02	357498625B	**KCR27002**	
1.4 i - 1.6 i		X	93-02	191598625	**KCR529**	
1.4 i 16V		X	97-02	6X0598477	**KMR27202**	
1.4 i 16V	X		97-02	357498625B	**KCR27002**	
1.4 i 16V		X	97-02	191598625	**KCR529**	
2.0 i 16V		X	96-99	6X0598477	**KMR27202**	
2.0 i 16V	X		96-99	357498625B	**KCR27002**	
2.0 i 16V		X	96-99	191598625	**KCR529**	
IBIZA III						
1.2	X		02-ago	6C0407621	**KMR27102**	SI ABS
1.2		X	02-ago	6Q0598611	**KMR27103**	
1.2 12V - 1.6 16V	X		06-set	6C0407621	**KMR27102**	SI ABS
1.2 12V - 1.6 16V		X	06-set	6Q0598611	**KMR27103**	
1.4 16V - 1.4 TDI - 1.9 TDI - 2.0	X		02-set	6C0407621	**KMR27102**	SI ABS
1.4 16V - 1.4 TDI - 1.9 TDI - 2.0		X	02-set	6Q0598611	**KMR27103**	
1.6	X		03-set	6C0407621	**KMR27102**	SI ABS
1.6		X	03-set	6Q0598611	**KMR27103**	
1.8 T Cupra R - 1.9 TDI Cupra R	X		04-ago	6C0407621	**KMR27102**	SI ABS
1.8 T Cupra R - 1.9 TDI Cupra R		X	04-ago	6Q0598611	**KMR27103**	
1.8 T FR	X		03-ago	6C0407621	**KMR27102**	SI ABS
1.8 T FR		X	03-ago	6Q0598611	**KMR27103**	
1.9 SDI	X		02-mag	6C0407621	**KMR27102**	SI ABS
1.9 SDI		X	02-mag	6Q0598611	**KMR27103**	

follow SEAT

MODELLO MODEL	ASS.ANT. FRONT AXLE	ASS.POS. REAR AXLE	ANNO YEAR	RIF ORIGINALE ORIGINAL REF	RIF CORAM CORAM REF	NOTE NOTES
IBIZA IV						
1.0 - 1.0 TSI	X		15-17	6C0407621	**KMR27102**	SI ABS
1.0 - 1.0 TSI		X	15-17	6Q0598611	**KMR27103**	
1.2 - 1.4	X		ago-15	6C0407621	**KMR27102**	SI ABS
1.2 - 1.4		X	ago-15	6Q0598611	**KMR27103**	
1.2 LPG - 1.4 LPG	X		08-nov	6C0407621	**KMR27102**	SI ABS
1.2 LPG - 1.4 LPG		X	08-nov	6Q0598611	**KMR27103**	
1.2 TDI	X		10-dic	6C0407621	**KMR27102**	SI ABS
1.2 TDI		X	10-dic	6Q0598611	**KMR27103**	
1.2 TSI	X		ott-17	6C0407621	**KMR27102**	SI ABS
1.2 TSI		X	ott-17	6Q0598611	**KMR27103**	
1.4 TDI	X		ago-17	6C0407621	**KMR27102**	SI ABS
1.4 TDI		X	ago-17	6Q0598611	**KMR27103**	
1.4 TSI	X		set-17	6C0407621	**KMR27102**	SI ABS
1.4 TSI		X	set-17	6Q0598611	**KMR27103**	
1.6	X		08-dic	6C0407621	**KMR27102**	SI ABS
1.6		X	08-dic	6Q0598611	**KMR27103**	
1.6 LPG	X		nov-15	6C0407621	**KMR27102**	SI ABS
1.6 LPG		X	nov-15	6Q0598611	**KMR27103**	
1.6 TDI	X		set-15	6C0407621	**KMR27102**	SI ABS
1.6 TDI		X	set-15	6Q0598611	**KMR27103**	
1.9 TDI	X		08-ott	6C0407621	**KMR27102**	SI ABS
1.9 TDI		X	08-ott	6Q0598611	**KMR27103**	
2.0 TDI	X		ott-15	6C0407621	**KMR27102**	SI ABS
2.0 TDI		X	ott-15	6Q0598611	**KMR27103**	

follow SEAT

MODELLO MODEL	ASS.ANT. FRONT AXLE	ASS.POS. REAR AXLE	ANNO YEAR	RIF ORIGINALE ORIGINAL REF	RIF CORAM CORAM REF	NOTE NOTES
IBIZA IV SPORTCOUPE						
1.0 - 1.0 TSI	X		15-16	6C0407621	**KMR27102**	SI ABS
1.0 - 1.0 TSI		X	15-16	6Q0598611	**KMR27103**	
1.2 - 1.4 - 1.6	X		ago-15	6C0407621	**KMR27102**	SI ABS
1.2 - 1.4 - 1.6		X	ago-15	6Q0598611	**KMR27103**	
1.2 TDI - 2.0 TDI	X		ott-15	6C0407621	**KMR27102**	SI ABS
1.2 TDI - 2.0 TDI		X	ott-15	6Q0598611	**KMR27103**	
1.2 TSI	X		ott-16	6C0407621	**KMR27102**	SI ABS
1.2 TSI		X	ott-16	6Q0598611	**KMR27103**	
1.4 LPG	X		08-nov	6C0407621	**KMR27102**	SI ABS
1.4 LPG		X	08-nov	6Q0598611	**KMR27103**	
1.4 TDI	X		ago-16	6C0407621	**KMR27102**	SI ABS
1.4 TDI		X	ago-16	6Q0598611	**KMR27103**	
1.4 TSI	X		set-16	6C0407621	**KMR27102**	SI ABS
1.4 TSI		X	set-16	6Q0598611	**KMR27103**	
1.4 TSI Cupra - 1.6 TDI	X		set-15	6C0407621	**KMR27102**	SI ABS
1.4 TSI Cupra - 1.6 TDI		X	set-15	6Q0598611	**KMR27103**	
1.6 LPG	X		nov-15	6C0407621	**KMR27102**	SI ABS
1.6 LPG		X	nov-15	6Q0598611	**KMR27103**	
1.8 TSI Cupra	X		15-16	6C0407621	**KMR27102**	SI ABS
1.8 TSI Cupra		X	15-16	6Q0598611	**KMR27103**	
1.9 TDI	X		08-ott	6C0407621	**KMR27102**	SI ABS
1.9 TDI		X	08-ott	6Q0598611	**KMR27103**	
IBIZA IV ST						
1.0 - 1.0 TSI	X		15-16	6C0407621	**KMR27102**	SI ABS
1.0 - 1.0 TSI		X	15-16	6Q0598611	**KMR27103**	
1.2 - 1.2 TDI - 1.4 - 1.6 TDI	X		ott-15	6C0407621	**KMR27102**	SI ABS
1.2 - 1.2 TDI - 1.4 - 1.6 TDI		X	ott-15	6Q0598611	**KMR27103**	
1.2 TSI	X		ott-16	6C0407621	**KMR27102**	SI ABS
1.2 TSI		X	ott-16	6Q0598611	**KMR27103**	
1.4 TDI	X		15-16	6C0407621	**KMR27102**	SI ABS
1.4 TDI		X	15-16	6Q0598611	**KMR27103**	
1.4 TSI	X		dic-16	6C0407621	**KMR27102**	SI ABS
1.4 TSI		X	dic-16	6Q0598611	**KMR27103**	
IBIZA SPORTCOUPE Cassone						
1.6 TDI	X		set-15	6C0407621	**KMR27102**	SI ABS
1.6 TDI		X	set-15	6Q0598611	**KMR27103**	
IBIZA V						
1.0 - 1.0 TGI - 1.0 TSI - 1.5 TSI - 1.6 TDI	X		17->	6C0407621	**KMR27102**	SI ABS

follow SEAT

MODELLO MODEL	ASS.ANT. FRONT AXLE	ASS.POS. REAR AXLE	ANNO YEAR	RIF ORIGINALE ORIGINAL REF	RIF CORAM CORAM REF	NOTE NOTES
INCA						
1.4 16V	X		00-03	357498625B	**KCR27002**	
1.4 i - 1.9 D - 1.9 SDI	X		95-03	357498625B	**KCR27002**	
1.6 i	X		95-00	357498625B	**KCR27002**	
1.7 D - 1.9 TDI	X		96-03	357498625B	**KCR27002**	
LEON						
1.0 TSI	X		15->	1K0498621	**KMR27002**	SI ABS
1.2 TSI	X		10-dic	1K0498621	**KMR27002**	SI ABS
1.2 TSI - 1.6 TDI	X		10-dic	1T0498621	**KMR27001**	SI ABS
1.4 16V	X		06-dic	1K0498621	**KMR27002**	SI ABS
1.4 16V - 1.6 - 1.8 20V - 1.8 20V T - 1.9 SDI - 1.9 TDI		X	99-06	1J0 598 477	**KMR27201**	SI ABS
1.4 16V - 1.6 - 1.8 20V - 1.8 20V T 4 - 1.9 SDI	X		06-dic	1T0498621	**KMR27001**	SI ABS
1.4 16V - 1.6 - 1.8 20V - 1.8 20V T 4 - 1.9 SDI	X		99-06	6N0498625	**KCR27001**	
1.4 16V - 1.6 - 1.8 20V - 1.8 20V T 4 - 1.9 SDI - 1.9 TDI	X		99-06	1J0498625	**KMR27101**	
1.4 TGI - 2.0 Cupra	X		13->	1K0498621	**KMR27002**	SI ABS
1.4 TSI - 1.8 TSI	X		07-dic	1T0498621	**KMR27001**	SI ABS
1.4 TSI - 1.8 TSI	X		07-dic	1K0498621	**KMR27002**	SI ABS
1.5 TSI	X		18->	1K0498621	**KMR27002**	SI ABS
1.6	X		05-dic	1T0498621	**KMR27001**	SI ABS
1.6	X		05-dic	1K0498621	**KMR27002**	SI ABS
1.6		X	05-giu	1J0 598 477	**KMR27201**	SI ABS
1.6 16V		X	00-06	1J0 598 477	**KMR27201**	SI ABS
1.6 16V - 1.8 20V T	X		00-06	6N0498625	**KCR27001**	
1.6 LPG	X		09-dic	1T0498621	**KMR27001**	SI ABS
1.6 LPG	X		09-dic	1K0498621	**KMR27002**	SI ABS
1.6 TDI	X		10->	1K0498621	**KMR27002**	SI ABS
1.8 T Cupra R	X		02-giu	1J0498625	**KMR27101**	
1.8 T Cupra R		X	02-giu	1J0 598 477	**KMR27201**	SI ABS
1.8 T Cupra R - 1.9 TDI Syncro	X		02-giu	6N0498625	**KCR27001**	
1.9 TDI	X		99-06	6N0498625	**KCR27001**	
1.9 TDI - 2.0 FSI	X		05-ott	1T0498621	**KMR27001**	SI ABS
1.9 TDI - 2.0 FSI	X		05-ott	1K0498621	**KMR27002**	SI ABS
1.9 TDI Syncro	X	X	02-giu	1J0498625	**KMR27101**	
2.0 Cupra R	X		09-dic	1T0498621	**KMR27001**	SI ABS
2.0 Cupra R	X		09-dic	1K0498621	**KMR27002**	SI ABS
2.0 TDI	X		05->	1K0498621	**KMR27002**	SI ABS
2.0 TDI - 2.0 TDI 16V - 2.0 TFSI	X		05-dic	1T0498621	**KMR27001**	SI ABS
2.0 TDI 16V - 2.0 TFSI	X		05-dic	1K0498621	**KMR27002**	SI ABS
2.8 Cupra 4	X	X	01-giu	6N0498625	**KCR27001**	
2.8 Cupra 4	X	X	01-giu	1J0498625	**KMR27101**	

follow SEAT

MODELLO MODEL	ASS.ANT. FRONT AXLE	ASS.POS. REAR AXLE	ANNO YEAR	RIF ORIGINALE ORIGINAL REF	RIF CORAM CORAM REF	NOTE NOTES
LEON SC						
1.0 TSI	X		15-18	1K0498621	**KMR27002**	SI ABS
1.2 TSI - 1.4 TSI - 1.6 TDI - 1.8 TSI - 2.0 Cupra	X		13-18	1K0498621	**KMR27002**	SI ABS
2.0 TDI	X		13->	1K0498621	**KMR27002**	SI ABS
LEON ST						
1.0 TSI	X		15->	1K0498621	**KMR27002**	SI ABS
1.2 TSI - 1.4 TGI - 1.6 TDI - 1.8 TSI - 2.0 Cupra - 2.0 TDI	X		13->	1K0498621	**KMR27002**	SI ABS
1.4 TSI	X		12->	1K0498621	**KMR27002**	SI ABS
1.5 TSI	X		18->	1K0498621	**KMR27002**	SI ABS
1.6 4Drive - 1.8 TSI 4Drive - 2.0 TDI 4Drive	X	X	14->	1K0498621	**KMR27002**	SI ABS
2.0 Cupra 4Drive	X	X	16->	1K0498621	**KMR27002**	SI ABS
MARBELLA						
0.8	X		86-93	3981586	**KMR12201**	
0.9	X		87-98	3981586	**KMR12201**	
0.9 Cat	X		90-98	3981586	**KMR12201**	
MARBELLA Furgonato						
0.8 - 0.9 Cat	X		87-93	3981586	**KMR12201**	
0.9	X		87-99	3981586	**KMR12201**	
TERRA Furgonato						
0.9	X		87-95	3981586	**KMR12201**	
0.9 Cat	X		90-95	3981586	**KMR12201**	
1.3 D - 1.4 D	X		90-92	3981586	**KMR12201**	
TOLEDO I						
1.6 i - 1.8 16V - 1.9 D - 1.9 TD - 2.0 i	X		91-99	357498625B	**KCR27002**	
1.6 i - 1.8 16V - 1.9 D - 1.9 TD - 2.0 i		X	91-99	191598625	**KCR529**	
1.8 i	X		91-96	357498625B	**KCR27002**	
1.8 i		X	91-96	191598625	**KCR529**	
1.9 TDI	X		95-99	357498625B	**KCR27002**	
1.9 TDI		X	95-99	191598625	**KCR529**	
2.0 i 16V		X	93-99	191598625	**KCR529**	

follow SEAT

MODELLO MODEL	ASS.ANT. FRONT AXLE	ASS.POS. REAR AXLE	ANNO YEAR	RIF ORIGINALE ORIGINAL REF	RIF CORAM CORAM REF	NOTE NOTES
TOLEDO II						
1.4 16V	X		00-02	6N0498625	**KCR27001**	
1.4 16V	X		00-02	1J0498625	**KMR27101**	
1.4 16V		X	00-02	1J0 598 477	**KMR27201**	SI ABS
1.6 - 1.8 20V	X		98-04	6N0498625	**KCR27001**	
1.6 - 1.8 20V	X		98-04	1J0498625	**KMR27101**	
1.6 - 1.8 20V - 1.9 TDI		X	98-04	1J0 598 477	**KMR27201**	SI ABS
1.6 16V	X		00-06	6N0498625	**KCR27001**	
1.6 16V	X		00-06	1J0498625	**KMR27101**	
1.6 16V		X	00-06	1J0 598 477	**KMR27201**	SI ABS
1.8 20VT	X		00-04	6N0498625	**KCR27001**	
1.8 20VT	X		00-04	1J0498625	**KMR27101**	
1.8 20VT		X	00-04	1J0 598 477	**KMR27201**	SI ABS
1.9 TDI	X		98-06	6N0498625	**KCR27001**	
1.9 TDI	X		98-06	1J0498625	**KMR27101**	
1.9 TDI 4Drive	X	X	00-05	6N0498625	**KCR27001**	
1.9 TDI 4Drive	X	X	00-05	1J0498625	**KMR27101**	
2.3 V5	X		98-00	6N0498625	**KCR27001**	
2.3 V5	X		98-00	1J0498625	**KMR27101**	
2.3 V5		X	98-00	1J0 598 477	**KMR27201**	SI ABS
2.3 V5 20V	X		00-03	6N0498625	**KCR27001**	
2.3 V5 20V	X		00-03	1J0498625	**KMR27101**	
2.3 V5 20V		X	00-03	1J0 598 477	**KMR27201**	SI ABS
TOLEDO III						
1.4 16V	X		06-set	1T0498621	**KMR27001**	SI ABS
1.4 16V	X		06-set	1K0498621	**KMR27002**	SI ABS
1.4 TSI - 1.8 TFSI	X		07-set	1T0498621	**KMR27001**	SI ABS
1.4 TSI - 1.8 TFSI	X		07-set	1K0498621	**KMR27002**	SI ABS
1.6 - 1.9 TDI - 2.0 FSI - 2.0 TDI - 2.0 TDI 16V	X		04-set	1T0498621	**KMR27001**	SI ABS
1.6 - 1.9 TDI - 2.0 FSI - 2.0 TDI - 2.0 TDI 16V	X		04-set	1K0498621	**KMR27002**	SI ABS
2.0 TFSI	X		05-set	1T0498621	**KMR27001**	SI ABS
2.0 TFSI	X		05-set	1K0498621	**KMR27002**	SI ABS
TOLEDO IV						
1.0 TSI	X		17-19	6C0407621	**KMR27102**	SI ABS
1.2	X		dic-15	6C0407621	**KMR27102**	SI ABS
1.2 TSI	X		ott-17	6C0407621	**KMR27102**	SI ABS
1.4 TDI	X		15-19	6C0407621	**KMR27102**	SI ABS
1.4 TSI	X		dic-15	6C0407621	**KMR27102**	SI ABS
1.6	X		13-15	6C0407621	**KMR27102**	SI ABS
1.6 TDI	X		dic-19	6C0407621	**KMR27102**	SI ABS

SKODA

MODELLO MODEL	ASS.ANT. FRONT AXLE	ASS.POS. REAR AXLE	ANNO YEAR	RIF ORIGINALE ORIGINAL REF	RIF CORAM CORAM REF	NOTE NOTES
FABIA I						
1.0	X		99-02	6C0407621	**KMR27102**	SI ABS
1.0		X	99-02	6Q0598611	**KMR27103**	
1.2	X		01-ago	6C0407621	**KMR27102**	SI ABS
1.2		X	01-ago	6Q0598611	**KMR27103**	
1.4	X		99-03	6C0407621	**KMR27102**	SI ABS
1.4		X	99-03	6Q0598611	**KMR27103**	
1.4 16V - 1.9 SDI	X		99-08	6C0407621	**KMR27102**	SI ABS
1.4 16V - 1.9 SDI		X	99-08	6Q0598611	**KMR27103**	
1.4 TDI - 1.9 TDI RS		X	03-ago	6Q0598611	**KMR27103**	
1.4 TDI - 1.9 TDI RS - 2.0	X		03-ago	6C0407621	**KMR27102**	SI ABS
1.9 TDI	X		00-08	6C0407621	**KMR27102**	SI ABS
1.9 TDI		X	00-08	6Q0598611	**KMR27103**	
2.0		X	99-08	6Q0598611	**KMR27103**	
FABIA I Combi						
1.2	X		01-lug	6C0407621	**KMR27102**	SI ABS
1.2		X	01-lug	6Q0598611	**KMR27103**	
1.4	X		00-03	6C0407621	**KMR27102**	SI ABS
1.4		X	00-03	6Q0598611	**KMR27103**	
1.4 16V - 1.9 SDI - 1.9 TDI - 2.0	X		00-07	6C0407621	**KMR27102**	SI ABS
1.4 16V - 1.9 SDI - 1.9 TDI - 2.0		X	00-07	6Q0598611	**KMR27103**	
1.4 TDI	X		03-lug	6C0407621	**KMR27102**	SI ABS
1.4 TDI		X	03-lug	6Q0598611	**KMR27103**	
FABIA I Praktik						
1.2 - 1.4 - 1.9 SDI	X		01-lug	6C0407621	**KMR27102**	SI ABS
1.2 - 1.4 - 1.9 SDI		X	01-lug	6Q0598611	**KMR27103**	
1.4 TDI	X		04-lug	6C0407621	**KMR27102**	SI ABS
1.4 TDI		X	04-lug	6Q0598611	**KMR27103**	
1.9 TDI	X		00-07	6C0407621	**KMR27102**	SI ABS
1.9 TDI		X	00-07	6Q0598611	**KMR27103**	

follow SKODA

MODELLO MODEL	ASS.ANT. FRONT AXLE	ASS.POS. REAR AXLE	ANNO YEAR	RIF ORIGINALE ORIGINAL REF	RIF CORAM CORAM REF	NOTE NOTES
FABIA I Tre volumi						
1.2	X		01-lug	6C0407621	**KMR27102**	SI ABS
1.2		X	01-lug	6Q0598611	**KMR27103**	
1.4	X		01-mar	6C0407621	**KMR27102**	SI ABS
1.4		X	00-03	6Q0598611	**KMR27103**	
1.4 16V - 1.9 SDI - 2.0	X		99-07	6C0407621	**KMR27102**	SI ABS
1.4 16V - 1.9 SDI - 2.0		X	99-07	6Q0598611	**KMR27103**	
1.4 TDI	X		03-lug	6C0407621	**KMR27102**	SI ABS
1.4 TDI		X	03-lug	6Q0598611	**KMR27103**	
1.9 TDI	X		00-07	6C0407621	**KMR27102**	SI ABS
1.9 TDI		X	00-07	6Q0598611	**KMR27103**	
FABIA II						
1.2	X		giu-14	6C0407621	**KMR27102**	SI ABS
1.2		X	giu-14	6Q0598611	**KMR27103**	
1.2 12V	X		nov-14	6C0407621	**KMR27102**	SI ABS
1.2 12V		X	nov-14	6Q0598611	**KMR27103**	
1.2 LPG - 1.4 - 1.4 LPG - 1.6	X		lug-14	6C0407621	**KMR27102**	SI ABS
1.2 LPG - 1.4 - 1.4 LPG - 1.6		X	lug-14	6Q0598611	**KMR27103**	
1.2 TDI - 1.2 TSI - 1.4 TSI RS - 1.6 TDI	X		ott-14	6C0407621	**KMR27102**	SI ABS
1.2 TDI - 1.2 TSI - 1.4 TSI RS - 1.6 TDI		X	ott-14	6Q0598611	**KMR27103**	
1.4 TDI - 1.9 TDI	X		07-ott	6C0407621	**KMR27102**	SI ABS
1.4 TDI - 1.9 TDI		X	07-ott	6Q0598611	**KMR27103**	
FABIA II Combi						
1.2 - 1.2 LPG - 1.4 - 1.4 LPG - 1.6	X		lug-14	6C0407621	**KMR27102**	SI ABS
1.2 - 1.2 LPG - 1.4 - 1.4 LPG - 1.6		X	lug-14	6Q0598611	**KMR27103**	
1.2 12V	X		nov-14	6C0407621	**KMR27102**	SI ABS
1.2 12V		X	nov-14	6Q0598611	**KMR27103**	
1.2 TDI - 1.2 TSI - 1.4 TSI RS - 1.6 TDI	X		ott-14	6C0407621	**KMR27102**	SI ABS
1.2 TDI - 1.2 TSI - 1.4 TSI RS - 1.6 TDI		X	ott-14	6Q0598611	**KMR27103**	
1.4 TDI - 1.9 TDI	X		07-ott	6C0407621	**KMR27102**	SI ABS
1.4 TDI - 1.9 TDI		X	07-ott	6Q0598611	**KMR27103**	
FABIA III						
1.0 - 1.0 TSI - 1.2 TSI - 1.4 TDI	X		14->	6C0407621	**KMR27102**	SI ABS
1.0 - 1.0 TSI - 1.2 TSI - 1.4 TDI		X	14->	6Q0598611	**KMR27103**	
1.4 TSI R5		X	18->	6Q0598611	**KMR27103**	
1.6	X		15->	6C0407621	**KMR27102**	SI ABS
1.6		X	15->	6Q0598611	**KMR27103**	

follow SKODA

MODELLO MODEL	ASS.ANT. FRONT AXLE	ASS.POS. REAR AXLE	ANNO YEAR	RIF ORIGINALE ORIGINAL REF	RIF CORAM CORAM REF	NOTE NOTES
FABIA III Station wagon						
1.0 - 1.0 TSI - 1.2 TSI - 1.4 TDI	X		14->	6C0407621	**KMR27102**	SI ABS
1.0 - 1.0 TSI - 1.2 TSI - 1.4 TDI		X	14->	6Q0598611	**KMR27103**	
1.6	X		15->	6C0407621	**KMR27102**	SI ABS
1.6		X	15->	6Q0598611	**KMR27103**	
FAVORIT						
1.3		X	94-94	969-300171	**KCR529**	
1.3 1.35L		X	89-94	969-300171	**KCR529**	
1.3 135 - 1.3 135 X,LX,GLX - 1.3 136		X	90-94	969-300171	**KCR529**	
FAVORIT Forman						
1.3		X	91-95	969-300171	**KCR529**	
FAVORIT Pick-up						
1.3		X	92-97	969-300171	**KCR529**	
FELICIA I						
1.3		X	94-98	969-300171	**KCR529**	
1.6 LX - 1.9 D		X	95-98	969-300171	**KCR529**	
FELICIA I Pick-up						
1.3 - 1.6 -1.9 D		X	97-02	969-300171	**KCR529**	
FELICIA I Station wagon						
1.3 - 1.3 LX - 1.3 LXI - 1.6 GLX - 1.9 D		X	95-98	969-300171	**KCR529**	
FELICIA II						
1.3 - 1.6 - 1.9 D		X	98-01	969-300171	**KCR529**	
FELICIA II Station wagon						
1.3 - 1.6 - 1.9 D		X	98-01	969-300171	**KCR529**	
KAROQ						
1.0 TSI - 1.5 TSI - 1.6 TDI		X	17->	8V0598611A	**KMR27003**	SI ABS
2.0 TDI 4x4		X	17->	1K0498621	**KMR27002**	SI ABS

follow SKODA

MODELLO MODEL	ASS.ANT. FRONT AXLE	ASS.POS. REAR AXLE	ANNO YEAR	RIF ORIGINALE ORIGINAL REF	RIF CORAM CORAM REF	NOTE NOTES
KODIAQ						
1.4 TSI 4x4 - 2.0 TDI 4x4 - 2.0 TSI 4x4		X	16->	1K0498621	**KMR27002**	SI ABS
OCTAVIA I						
1.4	X		99-01	6N0498625	**KCR27001**	
1.4	X		99-01	1J0498625	**KMR27101**	
1.4		X	99-01	1J0598477	**KMR27201**	SI ABS
1.4 16V	X		00-10	6N0498625	**KCR27001**	
1.4 16V	X		00-10	1J0498625	**KMR27101**	
1.4 16V		X	00-10	1J0598477	**KMR27201**	SI ABS
1.6	X		96-10	6N0498625	**KCR27001**	
1.6	X		96-10	1J0498625	**KMR27101**	
1.6		X	96-10	1J0598477	**KMR27201**	SI ABS
1.8	X		96-00	1J0498625	**KMR27101**	
1.8		X	96-00	1J0598477	**KMR27201**	SI ABS
1.8 T	X		96-00	6N0498625	**KCR27001**	
1.8 T	X		97-10	1J0498625	**KMR27101**	
1.8 T		X	97-10	1J0598477	**KMR27201**	SI ABS
1.8 T 4x4	X	X	01-giu	6N0498625	**KCR27001**	
1.8 T 4x4	X	X	01-giu	1J0498625	**KMR27101**	
1.9 SDI	X		97-03	6N0498625	**KCR27001**	
1.9 SDI	X		97-03	1J0498625	**KMR27101**	
1.9 SDI		X	97-03	1J0598477	**KMR27201**	SI ABS
1.9 TDI	X		96-10	6N0498625	**KCR27001**	
1.9 TDI	X		96-10	1J0498625	**KMR27101**	
1.9 TDI		X	97-10	1J0598477	**KMR27201**	SI ABS
2.0	X		99-07	6N0498625	**KCR27001**	
2.0	X		99-07	1J0498625	**KMR27101**	
2.0		X	99-07	1J0598477	**KMR27201**	SI ABS
RS1.8 T	X		01-giu	6N0498625	**KCR27001**	
RS1.8 T	X		01-giu	1J0498625	**KMR27101**	
RS1.8 T		X	01-giu	1J0598477	**KMR27201**	SI ABS
OCTAVIA I Cassone						
1.9 TDI	X		00-10	6N0498625	**KCR27001**	
1.9 TDI	X		00-10	1J0498625	**KMR27101**	
1.9 TDI		X	00-10	1J0598477	**KMR27201**	SI ABS

follow SKODA

MODELLO MODEL	ASS.ANT. FRONT AXLE	ASS.POS. REAR AXLE	ANNO YEAR	RIF ORIGINALE ORIGINAL REF	RIF CORAM CORAM REF	NOTE NOTES
OCTAVIA I Combi						
1.4 16V	X		00-10	6N0498625	**KCR27001**	
1.4 16V	X		00-10	1J0498625	**KMR27101**	
1.4 16V		X	00-10	1J0598477	**KMR27201**	SI ABS
1.6 - 1.8 T - 1.9 TDI	X		98-10	6N0498625	**KCR27001**	
1.6 - 1.8 T - 1.9 TDI	X		98-10	1J0498625	**KMR27101**	
1.6 - 1.8 T - 1.9 TDI		X	98-10	1J0598477	**KMR27201**	SI ABS
1.8 20V	X		98-00	6N0498625	**KCR27001**	
1.8 20V	X		98-00	1J0498625	**KMR27101**	
1.8 20V		X	98-00	1J0598477	**KMR27201**	SI ABS
1.8 T 4x4	X	X	01-giu	6N0498625	**KCR27001**	
1.8 T 4x4	X	X	01-giu	1J0498625	**KMR27101**	
1.9 SDI	X		98-03	6N0498625	**KCR27001**	
1.9 SDI	X		98-03	1J0498625	**KMR27101**	
1.9 SDI		X	98-03	1J0598477	**KMR27201**	SI ABS
1.9 TDI 4x4	X	X	99-06	6N0498625	**KCR27001**	
1.9 TDI 4x4	X	X	99-06	1J0498625	**KMR27101**	
2.0	X		99-07	6N0498625	**KCR27001**	
2.0	X		99-07	1J0498625	**KMR27101**	
2.0		X	99-07	1J0598477	**KMR27201**	SI ABS
2.0 4x4	X	X	00-10	6N0498625	**KCR27001**	
2.0 4x4	X	X	00-10	1J0498625	**KMR27101**	
RS 1.8T	X		02-giu	6N0498625	**KCR27001**	
RS 1.8T	X		02-giu	1J0498625	**KMR27101**	
RS 1.8T		X	02-giu	1J0598477	**KMR27201**	SI ABS

follow SKODA

MODELLO MODEL	ASS.ANT. FRONT AXLE	ASS.POS. REAR AXLE	ANNO YEAR	RIF ORIGINALE ORIGINAL REF	RIF CORAM CORAM REF	NOTE NOTES
OCTAVIA II						
1.2 TSI	X		ott-13	1T0498621	**KMR27001**	SI ABS
1.2 TSI	X		ott-13	1K0498621	**KMR27002**	SI ABS
1.4 - 1.6 - 2.0 TDI 16V	X		apr-13	1T0498621	**KMR27001**	SI ABS
1.4 - 1.6 - 2.0 TDI 16V	X		apr-13	1K0498621	**KMR27002**	SI ABS
1.4 FSI - 2.0 FSI	X		04-ago	1T0498621	**KMR27001**	SI ABS
1.4 TSI - 1.6 MultiFuel	X		ago-13	1T0498621	**KMR27001**	SI ABS
1.4 TSI - 1.6 MultiFuel	X		ago-13	1K0498621	**KMR27002**	SI ABS
1.6 FSI - 2.0 FSI	X		04-ago	1K0498621	**KMR27002**	SI ABS
1.6 LPG	X		09-dic	1T0498621	**KMR27001**	SI ABS
1.6 LPG	X		09-dic	1K0498621	**KMR27002**	SI ABS
1.6 TDI	X		set-13	1T0498621	**KMR27001**	SI ABS
1.6 TDI	X		set-13	1K0498621	**KMR27002**	SI ABS
1.8 TSI	X		lug-13	1T0498621	**KMR27001**	SI ABS
1.8 TSI	X		lug-13	1K0498621	**KMR27002**	SI ABS
1.9 TDI - 2.0 TDI	X		04-ott	1T0498621	**KMR27001**	SI ABS
1.9 TDI - 2.0 TDI	X		04-ott	1K0498621	**KMR27002**	SI ABS
2.0 RS	X		mag-13	1T0498621	**KMR27001**	SI ABS
2.0 RS	X		mag-13	1K0498621	**KMR27002**	SI ABS
2.0 TDI RS	X		giu-13	1T0498621	**KMR27001**	SI ABS
2.0 TDI RS	X		giu-13	1K0498621	**KMR27002**	SI ABS

follow SKODA

MODELLO MODEL	ASS.ANT. FRONT AXLE	ASS.POS. REAR AXLE	ANNO YEAR	RIF ORIGINALE ORIGINAL REF	RIF CORAM CORAM REF	NOTE NOTES
OCTAVIA II Combi						
1.2 TSI - 2.0 TDI 16 4x4	X		ott-13	1T0498621	**KMR27001**	SI ABS
1.2 TSI - 2.0 TDI 16 4x4	X		ott-13	1K0498621	**KMR27002**	SI ABS
1.4 - 1.6 - 2.0 TDI 16V	X		apr-13	1T0498621	**KMR27001**	SI ABS
1.4 - 1.6 - 2.0 TDI 16V	X		apr-13	1K0498621	**KMR27002**	SI ABS
1.4 FSI - 1.6 MultiFuel - 1.8 TSI 4x4	X		ago-13	1K0498621	**KMR27002**	SI ABS
1.6 FSI	X		04-ago	1K0498621	**KMR27002**	SI ABS
1.6 FSI - 1.6 MultiFuel - 1.8 TSI 4x4	X		ago-13	1T0498621	**KMR27001**	SI ABS
1.6 LPG	X		09-dic	1T0498621	**KMR27001**	SI ABS
1.6 LPG	X		09-dic	1K0498621	**KMR27002**	SI ABS
1.6 TDI - 1.6 TDI 4x4	X		set-13	1T0498621	**KMR27001**	SI ABS
1.6 TDI - 1.6 TDI 4x4	X		set-13	1K0498621	**KMR27002**	SI ABS
1.8 TSI	X		lug-13	1T0498621	**KMR27001**	SI ABS
1.8 TSI	X		lug-13	1K0498621	**KMR27002**	SI ABS
1.9 TDI - 1.9 TDI 4x4	X		04-ott	1T0498621	**KMR27001**	SI ABS
1.9 TDI - 1.9 TDI 4x4	X		04-ott	1K0498621	**KMR27002**	SI ABS
2.0 FSI	X		04-ago	1T0498621	**KMR27001**	SI ABS
2.0 FSI	X		04-ago	1K0498621	**KMR27002**	SI ABS
2.0 FSI 4x4	X		04-set	1T0498621	**KMR27001**	SI ABS
2.0 FSI 4x4	X		04-set	1K0498621	**KMR27002**	SI ABS
2.0 RS - 2.0 TDI	X		mag-13	1T0498621	**KMR27001**	SI ABS
2.0 TDI	X		mag-13	1K0498621	**KMR27002**	SI ABS
2.0 TDI RS - 2.0 TDI 4x4	X		giu-13	1T0498621	**KMR27001**	SI ABS
2.0 TDI RS - 2.0 TDI 4x4	X		giu-13	1K0498621	**KMR27002**	SI ABS
OCTAVIA III						
1.0 TSI	X		16->	1K0498621	**KMR27002**	SI ABS
1.0 TSI		X	16->	8V0598611A	**KMR27003**	SI ABS
1.2 TSI	X		dic-17	1K0498621	**KMR27002**	SI ABS
1.2 TSI - 1.4 TSI - 1.6 TDI - 1.8 TSI - 2.0 TDI		X	dic-17	8V0598611A	**KMR27003**	SI ABS
1.4 TSI - 1.6 TDI - 1.8 TSI - 2.0 TDI	X		12->	1K0498621	**KMR27002**	SI ABS
1.4 TSI - 1.6 TDI - 1.8 TSI - 2.0 TDI		X	12->	8V0598611A	**KMR27003**	SI ABS
1.4 TSI G-TEC - 2.0 TDI RS - 2.0 TSI RS		X	13->	8V0598611A	**KMR27003**	SI ABS
1.4 TSI G-TEC - 2.0 TDI RS 4x4 - 2.0 TDI RS - 2.0 TSI RS	X		13->	1K0498621	**KMR27002**	SI ABS
1.5	X		17->	1K0498621	**KMR27002**	SI ABS
1.5 TSI - 2.0 TSI		X	17->	8V0598611A	**KMR27003**	SI ABS
1.6		X	14->	8V0598611A	**KMR27003**	SI ABS
1.6 - 1.6 TDI 4x4 - 1.8 TSI 4x4 - 2.0 TDI 4x4	X		14->	1K0498621	**KMR27002**	SI ABS
1.6 TDI 4x4 - 1.8 TSI 4x4 - 2.0 TDI 4x4		X	14->	1K0498621	**KMR27002**	SI ABS
2.0 TDI RS 4x4		X	13->	1K0498621	**KMR27002**	SI ABS

follow SKODA

MODELLO MODEL	ASS.ANT. FRONT AXLE	ASS.POS. REAR AXLE	ANNO YEAR	RIF ORIGINALE ORIGINAL REF	RIF CORAM CORAM REF	NOTE NOTES
OCTAVIA III Combi						
1.0 TSI	X		16->	1K0498621	**KMR27002**	SI ABS
1.0 TSI		X	16->	8V0598611A	**KMR27003**	SI ABS
1.2 TSI	X		dic-17	1K0498621	**KMR27002**	SI ABS
1.2 TSI		X	dic-17	8V0598611A	**KMR27003**	SI ABS
1.4 TSI - 1.6 TDI - 1.6 TDI 4x4 - 1.8 TSI - 1.8 TSI 4x4	X		12->	1K0498621	**KMR27002**	SI ABS
1.4 TSI - 1.6 TDI - 1.8 TSI - 2.0 TDI - 2.0 TSI RS		X	12->	8V0598611A	**KMR27003**	SI ABS
1.4 TSI G-TEC - 2.0 TDI RS	X		13->	1K0498621	**KMR27002**	SI ABS
1.5	X		17->	1K0498621	**KMR27002**	SI ABS
1.5 TSI - 2.0 TSI		X	12->	8V0598611A	**KMR27003**	SI ABS
1.5 TSI G-TEC		X	19->	8V0598611A	**KMR27003**	SI ABS
1.6		X	14->	8V0598611A	**KMR27003**	SI ABS
1.6 - 1.8 TSI 4x4 - 2.0 TDI RS 4x4	X		14->	1K0498621	**KMR27002**	SI ABS
1.6 TDI 4x4 - 1.8 TSI 4x4		X	12->	1K0498621	**KMR27002**	SI ABS
2.0 TDI - 2.0 TDI 4x4 - 2.0 TSI RS	X		12->	1K0498621	**KMR27002**	SI ABS
2.0 TDI 4x4		X	12->	1K0498621	**KMR27002**	SI ABS
2.0 TDI RS		X	13->	8V0598611A	**KMR27003**	SI ABS
2.0 TDI RS 4x4		X	14->	1K0498621	**KMR27002**	SI ABS
RAPID						
1.0 TSI	X		17->	6C0407621	**KMR27102**	SI ABS
1.2 - 1.2 TSI - 1.4 TSI - 1.6 - 1.6 TDI	X		12->	6C0407621	**KMR27102**	SI ABS
1.2 - 1.2 TSI - 1.4 TSI - 1.6 - 1.6 TDI		X	dic-15	1J0598477	**KMR27201**	SI ABS
1.4 TDI - 1.6 SRE	X		15->	6C0407621	**KMR27102**	SI ABS
RAPID Spaceback						
1.0 TSI	X		17->	6C0407621	**KMR27102**	SI ABS
1.2 - 1.2 TSI - 1.4 TSI - 1.6 - 1.6 TDI	X		12->	6C0407621	**KMR27102**	SI ABS
1.2 - 1.2 TSI - 1.4 TSI - 1.6 - 1.6 TDI		X	dic-15	1J0598477	**KMR27201**	SI ABS
1.4 TDI - 1.6 SRE	X		15->	6C0407621	**KMR27102**	SI ABS
ROOMSTER						
1.2 - 1.4 - 1.6	X		giu-15	6C0407621	**KMR27102**	SI ABS
1.2 - 1.4 - 1.6		X	giu-15	1J0598477	**KMR27201**	SI ABS
1.2 LPG	X		set-15	6C0407621	**KMR27102**	SI ABS
1.2 LPG		X	set-15	1J0598477	**KMR27201**	SI ABS
1.2 TDI - 1.2 TSI - 1.4 LPG - 1.6 TDI	X		ott-15	6C0407621	**KMR27102**	SI ABS
1.2 TDI - 1.2 TSI - 1.4 LPG - 1.6 TDI		X	ott-15	1J0598477	**KMR27201**	SI ABS
1.4 TDI - 1.6 LPG - 1.9 TDI	X		06-ott	6C0407621	**KMR27102**	SI ABS
1.4 TDI - 1.6 LPG - 1.9 TDI		X	06-ott	1J0598477	**KMR27201**	SI ABS

follow SKODA

MODELLO MODEL	ASS.ANT. FRONT AXLE	ASS.POS. REAR AXLE	ANNO YEAR	RIF ORIGINALE ORIGINAL REF	RIF CORAM CORAM REF	NOTE NOTES
ROOMSTER Praktik						
1.2 - 1.4	X		lug-15	6C0407621	**KMR27102**	SI ABS
1.2 - 1.4		X	lug-15	1J0598477	**KMR27201**	SI ABS
1.2 TDI - 1.2 TSI - 1.6 TDI	X		ott-15	6C0407621	**KMR27102**	SI ABS
1.2 TDI - 1.2 TSI - 1.6 TDI		X	ott-15	1J0598477	**KMR27201**	SI ABS
1.4 TDI	X		07-ott	6C0407621	**KMR27102**	SI ABS
1.4 TDI		X	07-ott	1J0598477	**KMR27201**	SI ABS
SUPERB I						
1.8 T - 1.9 TDI - 2.0	X		01-ago	4B0498625	**KCR27102**	
SUPERB II						
1.4 TSI - 1.8 TSI - 1.8 TSI 4x4 - 2.0 TDI	X		ago-15	1T0498621	**KMR27001**	SI ABS
1.6 TDI - 2.0 TDI 16V 4x4 - 2.0 TSI	X		ott-15	1T0498621	**KMR27001**	SI ABS
1.9 TDI	X		08-ott	1T0498621	**KMR27001**	SI ABS
2.0 TDI 16V	X		set-15	1T0498621	**KMR27001**	SI ABS
2.0 TDI 4x4 - 3.6 FSI 4x4	X		ago-15	1T0498621	**KMR27001**	SI ABS
SUPERB II Station Wagon						
1.4 TSI - 1.8 TSI - 1.8 TSI 4x4 - 2.0 TDI 16V	X		set-15	1T0498621	**KMR27001**	SI ABS
1.6 TDI - 2.0 TDI 16V 4x4 - 2.0 TSI	X		ott-15	1T0498621	**KMR27001**	SI ABS
1.9 TDI - 2.0 TDI	X		09-ott	1T0498621	**KMR27001**	SI ABS
2.0 TDI 4x4 - 3.6 V6 4x4	X		set-15	1T0498621	**KMR27001**	SI ABS
SUPERB III						
1.4 TSI 4x4 - 2.0 TDI 4x4 - 2.0 TSI 4x4	X		15->	1T0498621	**KMR27001**	SI ABS
SUPERB III Station wagon						
1.4 TSI 4x4 - 2.0 TDI 4x4 - 2.0 TSI 4x4		X	15->	1K0498621	**KMR27002**	SI ABS

follow SKODA

MODELLO MODEL	ASS.ANT. FRONT AXLE	ASS.POS. REAR AXLE	ANNO YEAR	RIF ORIGINALE ORIGINAL REF	RIF CORAM CORAM REF	NOTE NOTES
YETI						
1.2 TSI - 1.8 TSI 4x4 - 2.0 TDI - 2.0 TDI 4x4	X		set-17	1T0498621	**KMR27001**	SI ABS
1.2 TSI - 1.8 TSI 4x4 - 2.0 TDI - 2.0 TDI 4x4	X		set-17	1K0498621	**KMR27002**	SI ABS
1.4 TSI	X		ott-17	1T0498621	**KMR27001**	SI ABS
1.4 TSI	X		ott-17	1K0498621	**KMR27002**	SI ABS
1.4 TSI 4x4	X		15-17	1T0498621	**KMR27001**	SI ABS
1.4 TSI 4x4	X		15-17	1K0498621	**KMR27002**	SI ABS
1.6	X		14-17	1T0498621	**KMR27001**	SI ABS
1.6	X		14-17	1K0498621	**KMR27002**	SI ABS
1.6 TDI	X		ott-15	1T0498621	**KMR27001**	SI ABS
1.6 TDI	X		ott-15	1K0498621	**KMR27002**	SI ABS

SMART

MODELLO MODEL	ASS.ANT. FRONT AXLE	ASS.POS. REAR AXLE	ANNO YEAR	RIF ORIGINALE ORIGINAL REF	RIF CORAM CORAM REF	NOTE NOTES
FORTWO Cabrio						
0.8 Cdi - 1.0 - 1.0 Turbo	X		07->	A4513300059	**KMR19101**	SI ABS
1.0 Brabus	X		08->	A4513300059	**KMR19101**	SI ABS
1.0 Turbo Brabus	X		10->	A4513300059	**KMR19101**	SI ABS
electric drive	X		09->	A4513300059	**KMR19101**	SI ABS
electric drive Brabus	X		13->	A4513300059	**KMR19101**	SI ABS
FORTWO Coupé						
0.8 Cdi - 1.0 - 1.0 Turbo	X		07->	A4513300059	**KMR19101**	SI ABS
1.0 Brabus	X		08->	A4513300059	**KMR19101**	SI ABS
1.0 Turbo Brabus	X		10->	A4513300059	**KMR19101**	SI ABS
electric drive	X		09->	A4513300059	**KMR19101**	SI ABS
electric drive Brabus	X		13->	A4513300059	**KMR19101**	SI ABS

SUZUKI

MODELLO MODEL	ASS.ANT. FRONT AXLE	ASS.POS. REAR AXLE	ANNO YEAR	RIF ORIGINALE ORIGINAL REF	RIF CORAM CORAM REF	NOTE NOTES
IGNIS I						
1.3		X	00-03	46860-80G00	**KCR24001**	
SWIFT III						
1.6	X		06->	43440-79J00	**KCR24002**	SI ABS

follow SUZUKI

MODELLO MODEL	ASS.ANT. FRONT AXLE	ASS.POS. REAR AXLE	ANNO YEAR	RIF ORIGINALE ORIGINAL REF	RIF CORAM CORAM REF	NOTE NOTES
SWIFT IV						
1.6	X		12->	43440-79J00	**KCR24002**	SI ABS
SX4 / SX4 CLASSIC						
1.5	X		06-ott	43440-79J00	**KCR24002**	SI ABS
1.5 VVT - 1.5 VVT 4x4	X		10->	43440-79J00	**KCR24002**	SI ABS
1.6 DDiS	X		07->	43440-79J00	**KCR24002**	SI ABS
1.6 VVT - 1.6 CCT 4x4 - 1.9 DDiS - 1.9 DDiS 4x4	X		06->	43440-79J00	**KCR24002**	SI ABS
2.0 DDiS - 2.0 DDiS 4x4	X		09->	43440-79J00	**KCR24002**	SI ABS
SX4 S-Cross						
1.4 T - 1.4 T AllGrip	X		16->	43440-79J00	**KCR24002**	SI ABS
1.6 - 1.6 AllGrip - 1.6 DDiS - 1.6 DDiS AllGrip	X		13->	43440-79J00	**KCR24002**	SI ABS
SX4 Tre volumi						
1.6	X		07->	43440-79J00	**KCR24002**	SI ABS
VITARA						
1.4 T - 1.4 T AllGrip - 1.6 - 1.6 AllGrip	X		15->	43440-79J00	**KCR24002**	SI ABS
1.6 DDiS - 1.6 DDiS AllGrip	X		15->	43440-79J00	**KCR24002**	SI ABS

TOYOTA

MODELLO MODEL	ASS.ANT. FRONT AXLE	ASS.POS. REAR AXLE	ANNO YEAR	RIF ORIGINALE ORIGINAL REF	RIF CORAM CORAM REF	NOTE NOTES
AYGO						
1.0	X		05->	90369-W0001	**KCR26001**	SI ABS
1.0		X	05->	42450-0H010	**KMR10001**	
1.0 GPL	X		mag-14	90369-W0001	**KCR26001**	SI ABS
1.0 GPL		X	mag-14	42450-0H010	**KMR10001**	SI ABS
1.0 VVTi		X	18->	42450-0H010	**KCR26001**	
1.2		X	14->	42450-0H010	**KCR26001**	
1.4 HDi	X		05-ott	90369-W0001	**KCR26001**	SI ABS
1.4 HDi		X	05-ott	42450-0H010	**KCR26001**	SI ABS
IQ						
1.33 - 1.4 D-4D	X		set-15	90363-W005	**KCR26002**	

follow TOYOTA

MODELLO MODEL	ASS.ANT. FRONT AXLE	ASS.POS. REAR AXLE	ANNO YEAR	RIF ORIGINALE ORIGINAL REF	RIF CORAM CORAM REF	NOTE NOTES
URBAN CRUISER						
1.33	X		set-16	90363-W005	**KCR26002**	
1.4 D-4D - 1.4 D-4D 4WD	X		set-14	90363-W005	**KCR26002**	
VERSO S						
1.33 - 1.4 D4-D	X		ott-16	90363-W005	**KCR26002**	
VIOS Tre volumi						
1.3		X	giu-13	42450-0D050	**KMR26003**	SI ABS
YARIS						
1.0	X		10->	90363-W005	**KCR26002**	
1.0		X	10->	42450-0D050	**KMR26003**	SI ABS
1.0 - 1.3		X	99-05	42410-0D010	**KCR26001**	
1.0 - 1.3		X	99-05	42450-0D010	**KMR26002**	SI ABS
1.0 - 1.3	X		99-05	90080-36108	**KCR14102**	
1.0 GPL	X		06-nov	90363-W005	**KCR26002**	
1.0 GPL		X	06-nov	42450-0D050	**KMR26003**	SI ABS
1.0 VVT-i - 1.3 VVT-i	X		05-ott	90363-W005	**KCR26002**	
1.0 VVT-i - 1.3 VVT-i		X	05-nov	42450-0D050	**KMR26003**	SI ABS
1.3 - 1.4 D	X		11->	90363-W005	**KCR26002**	
1.3 - 1.4 D		X	11->	42450-0D050	**KMR26003**	SI ABS
1.33 VVT-i	X		08-nov	90363-W005	**KCR26002**	
1.4 D-4D		X	01-mag	42410-0D010	**KCR26001**	
1.4 D-4D		X	01-mag	42450-0D010	**KMR26002**	SI ABS
1.4 D-4D	X		05-dic	90363-W005	**KCR26002**	
1.4 D-4D	X		01-mag	90080-36108	**KCR14102**	
1.4 D-4D		X	05-dic	42450-0D050	**KMR26003**	SI ABS
1.5		X	00-05	42450-0D010	**KMR26002**	SI ABS
1.5	X		17->	90363-W005	**KCR26002**	
1.5	X		00-05	90080-36108	**KCR14102**	
1.5		X	17->	42450-0D050	**KMR26003**	SI ABS
1.5 Hybrid	X		12->	90363-W005	**KCR26002**	
1.8 VVTi	X		07-nov	90363-W005	**KCR26002**	
1.8 VVTi		X	07-nov	42450-0D050	**KMR26003**	SI ABS
YARIS Cassone						
1.0 VVTi - 1.4 D4d		X	14->	42450-0D050	**KMR26003**	SI ABS

follow TOYOTA

MODELLO MODEL	ASS.ANT. FRONT AXLE	ASS.POS. REAR AXLE	ANNO YEAR	RIF ORIGINALE ORIGINAL REF	RIF CORAM CORAM REF	NOTE NOTES
YARIS Tre volumi						
1.3		X	giu-13	42450-0D050	**KMR26003**	SI ABS
YARIS Verso						
1.3		X	99-05	42410-0D010	**KCR26001**	
1.3		X	99-05	42450-0D010	**KMR26002**	SI ABS
1.3	X		99-05	90080-36108	**KCR14102**	
1.4 D-4D - 1.5		X	00-05	42410-0D010	**KCR26001**	
1.4 D-4D - 1.5		X	00-05	42450-0D010	**KMR26002**	SI ABS
1.4 D-4D - 1.5	X		00-05	90080-36108	**KCR14102**	
YARIS Verso VAN						
1.3 VVTi	X		00-05	90080-36108	**KCR14102**	
1.4 D4d	X		01-mag	90080-36108	**KCR14102**	

VAUXHALL

MODELLO MODEL	ASS.ANT. FRONT AXLE	ASS.POS. REAR AXLE	ANNO YEAR	RIF ORIGINALE ORIGINAL REF	RIF CORAM CORAM REF	NOTE NOTES
CHEVETTE 2 volumi						
1300	X		75-85	11054489	**KCR21007**	
ZAFIRA Mk III						
1.6 CDTi	X		13-18	13502829	**KMR20009**	

VOLKSWAGEN

MODELLO MODEL	ASS.ANT. FRONT AXLE	ASS.POS. REAR AXLE	ANNO YEAR	RIF ORIGINALE ORIGINAL REF	RIF CORAM CORAM REF	NOTE NOTES
1500,16						
1.5		X	61-73	191598625	**KCR529**	
1.6 - 1.6 TL		X	65-73	191598625	**KCR529**	
1.6 L		X	64-73	191598625	**KCR529**	
1500,1600 2 Volumi						
1.5 L		X	68-73	191598625	**KCR529**	
1.6 TL		X	65-73	191598625	**KCR529**	

follow VOLKSWAGEN

MODELLO MODEL	ASS.ANT. FRONT AXLE	ASS.POS. REAR AXLE	ANNO YEAR	RIF ORIGINALE ORIGINAL REF	RIF CORAM CORAM REF	NOTE NOTES
1500,1600 Variant						
1.6 L		X	65-73	191598625	**KCR529**	
411,412						
1.7		X	68-73	191598625	**KCR529**	
1.8		X	73-75	191598625	**KCR529**	
412 Variant						
1.7		X	72-73	191598625	**KCR529**	
1.8 E,LE		X	73-75	191598625	**KCR529**	
ARTEON						
2.0 TDI 4motion - 2.0 TSI 4motion		X	17->	1K0498621	**KMR27002**	SI ABS
BEETLE						
1.2 TSI - 1.4 TSI - 2.0 TSI - 2.5		X	nov-19	8V0598611A	**KMR27003**	SI ABS
1.2 TSI - 1.4 TSI - 2.5	X		nov-19	1T0498621	**KMR27001**	SI ABS
1.2 TSI 16V	X		14-19	1T0498621	**KMR27001**	SI ABS
1.2 TSI 16V		X	14-19	8V0598611A	**KMR27003**	SI ABS
1.6 TDI	X		nov-16	1T0498621	**KMR27001**	SI ABS
1.6 TDI		X	nov-16	8V0598611A	**KMR27003**	SI ABS
2.0 TDI - 2.0 TSI	X		nov-18	1T0498621	**KMR27001**	SI ABS
2.0 TDI - 2.0 TSI		X	nov-18	8V0598611A	**KMR27003**	SI ABS
BEETLE Cabriolet						
1.2 TSI	X		nov-19	1T0498621	**KMR27001**	SI ABS
1.2 TSI - 2.0 TSI		X	nov-19	8V0598611A	**KMR27003**	SI ABS
1.2 TSI 16V	X		14-19	1T0498621	**KMR27001**	SI ABS
1.2 TSI 16V		X	14-19	8V0598611A	**KMR27003**	SI ABS
1.4 TSI	X		nov-18	1T0498621	**KMR27001**	SI ABS
1.4 TSI		X	nov-18	8V0598611A	**KMR27003**	SI ABS
1.6 TDI - 2.5	X		nov-16	1T0498621	**KMR27001**	SI ABS
1.6 TDI - 2.5		X	nov-16	8V0598611A	**KMR27003**	SI ABS
2.0 TDI		X	dic-18	8V0598611A	**KMR27003**	SI ABS
2.0 TDI - 2.0 TSI	X		dic-18	1T0498621	**KMR27001**	SI ABS

follow VOLKSWAGEN

MODELLO MODEL	ASS.ANT. FRONT AXLE	ASS.POS. REAR AXLE	ANNO YEAR	RIF ORIGINALE ORIGINAL REF	RIF CORAM CORAM REF	NOTE NOTES
BORA						
1.4 16V - 1.6 16V - 1.8 T	X		00-05	6N0498625	**KCR27001**	
1.4 16V - 1.6 16V - 1.8 T	X		00-05	1J0407625	**KCR27101**	
1.6 - 1.8 - 1.9 SDI - 1.9 TDI	X		98-05	6N0498625	**KCR27001**	
1.6 - 1.8 - 1.9 SDI - 1.9 TDI	X		98-05	1J0407625	**KCR27101**	
1.6 - 1.8 - 1.9 SDI - 1.9 TDI		X	98-05	1J0498477	**KMR27201**	SI ABS
1.6 FSI	X		02-mag	6N0498625	**KCR27001**	
1.6 FSI	X		02-mag	1J0407625	**KCR27101**	
1.6 FSI		X	02-mag	1J0498477	**KMR27201**	SI ABS
1.8 4motion - 2.8 V6 4motion	X		99-05	6N0498625	**KCR27001**	
1.8 4motion - 2.8 V6 4motion	X		99-05	1J0407625	**KCR27101**	
1.9 TDI 4motion	X	X	98-05	6N0498625	**KCR27001**	
1.9 TDI 4motion	X	X	98-05	1J0407625	**KCR27101**	
2.0	X		98-13	6N0498625	**KCR27001**	
2.0	X		98-13	1J0407625	**KCR27101**	
2.0		X	98-13	1J0498477	**KMR27201**	SI ABS
2.0 4motion	X	X	00-05	6N0498625	**KCR27001**	
2.0 4motion	X	X	00-05	1J0407625	**KCR27101**	
2.3 V5	X		98-05	6N0498625	**KCR27001**	
2.3 V5	X		98-05	1J0407625	**KCR27101**	
2.3 V5		X	98-05	1J0498477	**KMR27201**	SI ABS
2.3 V5 4motion	X	X	98-05	6N0498625	**KCR27001**	
2.3 V5 4motion	X	X	98-05	1J0407625	**KCR27101**	
2.3 V6 4motion	X	X	99-05	1J0407625	**KCR27101**	

follow VOLKSWAGEN

MODELLO MODEL	ASS.ANT. FRONT AXLE	ASS.POS. REAR AXLE	ANNO YEAR	RIF ORIGINALE ORIGINAL REF	RIF CORAM CORAM REF	NOTE NOTES
BORA Variant						
1.4 16V	X		01-mag	6N0498625	**KCR27001**	
1.4 16V	X		01-mag	1J0407625	**KCR27101**	
1.4 16V		X	01-mag	1J0498477	**KMR27201**	SI ABS
1.6 - 1.9 TDI	X		99-05	6N0498625	**KCR27001**	
1.6 - 1.9 TDI	X		99-05	1J0407625	**KCR27101**	
1.6 - 1.9 TDI		X	99-05	1J0498477	**KMR27201**	SI ABS
1.6 16V - 1.8 T	X		00-05	6N0498625	**KCR27001**	
1.6 16V - 1.8 T	X		00-05	1J0407625	**KCR27101**	
1.6 16V - 1.8 T		X	00-05	1J0498477	**KMR27201**	SI ABS
1.6 FSI	X		02-mag	6N0498625	**KCR27001**	
1.6 FSI	X		02-mag	1J0407625	**KCR27101**	
1.6 FSI		X	02-mag	1J0498477	**KMR27201**	SI ABS
1.8 4motion - 1.9 TDI 4motion	X	X	99-05	6N0498625	**KCR27001**	
1.8 4motion - 1.9 TDI 4motion	X	X	99-05	1J0407625	**KCR27101**	
2.0 - 2.3 V5	X		99-05	6N0498625	**KCR27001**	
2.0 - 2.3 V5	X		99-05	1J0407625	**KCR27101**	
2.0 - 2.3 V5		X	99-05	1J0498477	**KMR27201**	SI ABS
2.0 4motion - 2.3 V5 4motion - 2.8 V6 4motion	X	X	99-05	6N0498625	**KCR27001**	
2.0 4motion - 2.3 V5 4motion - 2.8 V6 4motion	X	X	99-05	1J0407625	**KCR27101**	
CADDY ALLTRACK Furgonato						
1.0 TSI - 1.2 TSI - 1.4 TGI CNG - 1.4 TSI - 2.0 TDI	X		15->	1T0498621	**KMR27001**	SI ABS
2.0 TDI 4motion	X		15->	1T0498621	**KMR27001**	SI ABS
CADDY ALLTRACK SW						
1.0 TSI - 1.2 TSI - 1.4 TGI CNG - 1.4 TSI - 2.0 TDI	X		15->	1T0498621	**KMR27001**	SI ABS
2.0 TDI 4motion	X		15->	1T0498621	**KMR27001**	SI ABS
CADDY II Furgonato						
1.4	X		00-04	191498625A	**KCR27002**	
1.9 D - 1.9 SDI - 60 1.4	X		95-04	191498625A	**KCR27002**	
1.9 TDI	X		96-04	191498625A	**KCR27002**	
75 1.6	X		95-00	191498625A	**KCR27002**	
CADDY II Pick-UP						
1.6 - 1.9 D		X	96-00	191598625	**KCR529**	

follow VOLKSWAGEN

MODELLO MODEL	ASS.ANT. FRONT AXLE	ASS.POS. REAR AXLE	ANNO YEAR	RIF ORIGINALE ORIGINAL REF	RIF CORAM CORAM REF	NOTE NOTES
CADDY II Station wagon						
1.4	X		95-03	191498625A	**KCR27002**	
1.4 16V	X		00-04	191498625A	**KCR27002**	
1.6	X		95-00	191498625A	**KCR27002**	
1.9 D - 1.9 SDI	X		95-04	191498625A	**KCR27002**	
1.9 TDI	X		96-04	191498625A	**KCR27002**	
CADDY III Furgonato						
1.2 TSI - 1.6 TDI - 2.0 TDI 16V	X		ott-15	1T0498621	**KMR27001**	SI ABS
1.2 TSI - 1.6 TDI - 2.0 TDI 16V	X		ott-15	1K0498621	**KMR27002**	SI ABS
1.4 - 1.9 TDI - 2.0 SDI	X		04-ott	1T0498621	**KMR27001**	SI ABS
1.4 - 1.9 TDI - 2.0 SDI	X		04-ott	1K0498621	**KMR27002**	SI ABS
1.6	X		apr-15	1T0498621	**KMR27001**	SI ABS
1.6	X		apr-15	1K0498621	**KMR27002**	SI ABS
1.6 Bifuel	X		nov-15	1T0498621	**KMR27001**	SI ABS
1.6 Bifuel	X		nov-15	1K0498621	**KMR27002**	SI ABS
1.9 TDI 4motion	X		08-ott	1T0498621	**KMR27001**	SI ABS
1.9 TDI 4motion	X		08-ott	1K0498621	**KMR27002**	SI ABS
2.0 EcoFuel	X		giu-15	1T0498621	**KMR27001**	SI ABS
2.0 EcoFuel	X		giu-15	1K0498621	**KMR27002**	SI ABS
2.0 TDI	X		lug-15	1T0498621	**KMR27001**	SI ABS
2.0 TDI	X		lug-15	1K0498621	**KMR27002**	SI ABS
2.0 TDI 16V 4motion - 2.0 TDI 4motion	X		ott-15	1T0498621	**KMR27001**	SI ABS
CADDY III Station wagon						
1.2 TSI - 1.6 TDI - 2.0 TDI 16V	X		ott-15	1T0498621	**KMR27001**	SI ABS
1.2 TSI - 1.6 TDI - 2.0 TDI 16V	X		ott-15	1K0498621	**KMR27002**	SI ABS
1.4 - 1.9 TDI - 2.0 SDI	X		04-ott	1T0498621	**KMR27001**	SI ABS
1.4 - 1.9 TDI - 2.0 SDI	X		04-ott	1K0498621	**KMR27002**	SI ABS
1.6	X		apr-15	1T0498621	**KMR27001**	SI ABS
1.6	X		apr-15	1K0498621	**KMR27002**	SI ABS
1.6 Bifuel	X		nov-15	1T0498621	**KMR27001**	SI ABS
1.6 Bifuel	X		nov-15	1K0498621	**KMR27002**	SI ABS
1.9 TDI 4motion	X		08-ott	1T0498621	**KMR27001**	SI ABS
1.9 TDI 4motion	X		08-ott	1K0498621	**KMR27002**	SI ABS
2.0 EcoFuel	X		giu-15	1T0498621	**KMR27001**	SI ABS
2.0 EcoFuel	X		giu-15	1K0498621	**KMR27002**	SI ABS
2.0 TDI	X		lug-15	1T0498621	**KMR27001**	SI ABS
2.0 TDI	X		lug-15	1K0498621	**KMR27002**	SI ABS
2.0 TDI 16V 4motion - 2.0 TDI 4motion	X		ott-15	1T0498621	**KMR27001**	SI ABS

follow VOLKSWAGEN

MODELLO MODEL	ASS.ANT. FRONT AXLE	ASS.POS. REAR AXLE	ANNO YEAR	RIF ORIGINALE ORIGINAL REF	RIF CORAM CORAM REF	NOTE NOTES
CADDY IV Furgonato						
1.0 TSI - 1.2 TSI - 1.4 TGI - CNG - 1.4 TSI - 1.6	X		15->	1T0498621	**KMR27001**	SI ABS
1.6 TDI	X		15-17	1T0498621	**KMR27001**	SI ABS
2.0 TDI - 2.0 TDI 4motion	X		15->	1T0498621	**KMR27001**	SI ABS
CADDY IV Station wagon						
1.0 TSI - 1.2 TSI - 1.4 TGI - CNG - 1.4 TSI - 1.6	X		15->	1T0498621	**KMR27001**	SI ABS
1.6 TDI	X		15-17	1T0498621	**KMR27001**	SI ABS
2.0 TDI - 2.0 TDI 4motion	X		15->	1T0498621	**KMR27001**	SI ABS
CC						
1.4 TSI - 1.4 TSI MultiFuel - 1.8 TSI - 2.0 TDI -	X		nov-16	1T0498621	**KMR27001**	SI ABS
2.0 TDI 4motion - 2.0 TSI - 3.6 FSI 4motion	X		nov-16	1T0498621	**KMR27001**	SI ABS
CORRADO						
1.8 16V	X		89-92	191498625A	**KCR27002**	
1.8 16V		X	89-92	191598625	**KCR529**	
1.8 G60	X		88-93	191498625A	**KCR27002**	
1.8 G60		X	88-93	191598625	**KCR529**	
2.0 i	X		93-95	191498625A	**KCR27002**	
2.0 i		X	93-95	191598625	**KCR529**	
2.0 i 16V	X		91-95	191498625A	**KCR27002**	
2.0 i 16V - 2.9 VR6		X	91-95	191598625	**KCR529**	
DERBY						
0.9		X	77-81	191598625	**KCR529**	
1.0		X	81-84	191598625	**KCR529**	
1.1 - 1.3		X	77-83	191598625	**KCR529**	
EOS						
1.4 TSI	X		lug-15	1T0498621	**KMR27001**	SI ABS
1.6 FSI - 2.0 FSI	X		06-ago	1T0498621	**KMR27001**	SI ABS
2.0 TDI - 2.0 TDI 16V	X		ago-15	1T0498621	**KMR27001**	SI ABS
2.0 TFSI	X		giu-15	1T0498621	**KMR27001**	SI ABS
2.0 TSI	X		set-15	1T0498621	**KMR27001**	SI ABS
3.2 V6	X		06-ott	1T0498621	**KMR27001**	SI ABS

follow VOLKSWAGEN

MODELLO MODEL	ASS.ANT. FRONT AXLE	ASS.POS. REAR AXLE	ANNO YEAR	RIF ORIGINALE ORIGINAL REF	RIF CORAM CORAM REF	NOTE NOTES
FOX 2 volumi						
1.2	X		05-nov	6C0407621	**KMR27102**	SI ABS
1.2		X	05-nov	6Q0598611	**KMR27103**	SI ABS
1.4 - 1.4 TDI	X		05-set	6C0407621	**KMR27102**	SI ABS
1.4 - 1.4 TDI		X	05-set	6Q0598611	**KMR27103**	SI ABS
GOLF ALLTRACK VII						
1.6 TDI 4motion - 1.8 TSI 4motion -	X		14->	1K0498621	**KMR27002**	SI ABS
2.0 TDI 4motion	X		14-18	1K0498621	**KMR27002**	SI ABS
GOLF I						
1.1 - 1.5		X	74-83	191598625	**KCR529**	
1.3		X	79-83	191598625	**KCR529**	
1.5 D		X	76-80	191598625	**KCR529**	
1.6		X	75-83	191598625	**KCR529**	
1.6 D		X	80-83	191598625	**KCR529**	
1.6 GTI		X	76-82	191598625	**KCR529**	
1.6 TD - 1.8 GTI		X	82-83	191598625	**KCR529**	
GOLF I Cabriolet						
1.3		X	83-86	191598625	**KCR529**	
1.5		X	79-83	191598625	**KCR529**	
1.6		X	79-92	191598625	**KCR529**	
1.8		X	83-93	191598625	**KCR529**	

follow VOLKSWAGEN

MODELLO MODEL	ASS.ANT. FRONT AXLE	ASS.POS. REAR AXLE	ANNO YEAR	RIF ORIGINALE ORIGINAL REF	RIF CORAM CORAM REF	NOTE NOTES
GOLF II						
1.0	X		83-91	191498625A	**KCR27002**	
1.0		X	83-91	191598625	**KCR529**	
1.0 - 1.6 D - 1.6 TD - 1.8 GTI	X		85-91	6N0498625	**KCR27001**	
1.3	X		83-87	6N0498625	**KCR27001**	
1.3		X	83-87	191598625	**KCR529**	
1.3 Cat	X		86-92	6N0498625	**KCR27001**	
1.3 Cat	X		86-92	191498625A	**KCR27002**	
1.3 Cat - 1.6		X	86-92	191598625	**KCR529**	
1.6	X		83-92	6N0498625	**KCR27001**	
1.6	X		83-92	191498625A	**KCR27002**	
1.6 D - 1.6 TD - 1.8 GTI		X	83-91	191598625	**KCR529**	
1.6 D - 1.6 TD - 1.8 GTI	X		83-91	191498625A	**KCR27002**	
1.8	X		84-91	6N0498625	**KCR27001**	
1.8	X		84-91	191498625A	**KCR27002**	
1.8		X	84-91	191598625	**KCR529**	
1.8 GTI 16V		X	86-91	191598625	**KCR529**	
1.8 GTI 16V - 1.8 Syncro	X		86-91	6N0498625	**KCR27001**	
1.8 GTI 16V - 1.8 Syncro	X		86-91	191498625A	**KCR27002**	
1.8 GTI Cat - 1.8 iCat		X	87-91	191598625	**KCR529**	
1.8 GTI Cat - 1.8 iCat - 1.8 i CaT Syncro	X		87-91	6N0498625	**KCR27001**	
1.8 GTI Cat - 1.8 iCat - 1.8 i CaT Syncro	X		87-91	191498625A	**KCR27002**	
1.8 GTI G60	X		90-91	191498625A	**KCR27002**	
1.8 GTI G60	X		90-91	191598625	**KCR529**	
1.8 GTI G60 Syncro	X		88-91	191498625A	**KCR27002**	
GOLF II Van						
1.3	X		83-90	6N0498625	**KCR27001**	
1.3	X		83-90	191498625A	**KCR27002**	
1.3		X	83-90	191598625	**KCR529**	
1.6	X		89-91	191498625A	**KCR27002**	
1.6		X	89-91	191598625	**KCR529**	
1.6 D	X		83-91	6N0498625	**KCR27001**	
1.6 D	X		83-91	191498625A	**KCR27002**	
1.6 D		X	83-91	191598625	**KCR529**	
1.8 i	X		87-91	6N0498625	**KCR27001**	
1.8 i	X		87-91	191498625A	**KCR27002**	
1.8 i		X	87-91	191598625	**KCR529**	

follow VOLKSWAGEN

MODELLO MODEL	ASS.ANT. FRONT AXLE	ASS.POS. REAR AXLE	ANNO YEAR	RIF ORIGINALE ORIGINAL REF	RIF CORAM CORAM REF	NOTE NOTES
GOLF III						
1.4 - 1.8 - 1.9 D - 1.9 TD,GTD - 2.0	X		91-97	191498625A	**KCR27002**	
1.4 - 1.8 - 1.9 D - 1.9 TD,GTD - 2.0		X	91-97	191598625	**KCR529**	
1.6	X		92-97	191498625A	**KCR27002**	
1.6 - 2.0 GTI 16V - 2.8 VR6		X	92-97	191598625	**KCR529**	
1.8 Syncro - 1.9 TDI	X		93-97	191498625A	**KCR27002**	
1.9 SDI - 1.9 TDI Syncro - 2.0 Syncro	X		95-97	191498625A	**KCR27002**	
1.9 SDI - 1.9 TDI Syncro - 2.0 Syncro		X	95-97	191598625	**KCR529**	
1.9 TDI		X	93-97	191598625	**KCR529**	
2.0 VR6 Syncro	X		94-97	191498625A	**KCR27002**	
GOLF III Cabriolet						
1.6	X		94-98	191498625A	**KCR27002**	
1.6		X	94-98	191598625	**KCR529**	
1.8 - 2.0	X		93-98	191498625A	**KCR27002**	
1.8 - 2.0		X	93-98	191598625	**KCR529**	
1.9 TDI	X		95-98	191498625A	**KCR27002**	
1.9 TDI		X	95-98	191598625	**KCR529**	
GOLF III Van						
1.4	X		91-96	191498625A	**KCR27002**	
1.4		X	91-96	191598625	**KCR529**	
1.6	X		92-95	191498625A	**KCR27002**	
1.6		X	92-95	191598625	**KCR529**	
1.8 - 2.0 GTI	X		91-97	191498625A	**KCR27002**	
1.8 - 2.0 GTI		X	91-97	191598625	**KCR529**	
1.9 D	X		91-95	191498625A	**KCR27002**	
1.9 D		X	91-95	191598625	**KCR529**	
1.9 SDI	X		95-97	191498625A	**KCR27002**	
1.9 SDI		X	95-97	191598625	**KCR529**	
GOLF III Variant						
1.4 - 1.8 - 1.9 D - 1.9 TD - 2.0	X		93-99	191498625A	**KCR27002**	
1.4 - 1.8 - 1.9 D - 1.9 TD - 2.0		X	93-99	191598625	**KCR529**	
1.6 - 1.8 Syncro - 1.9 TDI - 2.9 VR6 Syncro	X		94-99	191498625A	**KCR27002**	
1.6 - 1.9 TDI - 2.9 VR6 Syncro		X	94-99	191598625	**KCR529**	
1.9 SDI		X	95-99	191598625	**KCR529**	
1.9 SDI - 1.9 TDI Syncro - 2.0 Syncro	X		95-99	191498625A	**KCR27002**	

follow VOLKSWAGEN

MODELLO MODEL	ASS.ANT. FRONT AXLE	ASS.POS. REAR AXLE	ANNO YEAR	RIF ORIGINALE ORIGINAL REF	RIF CORAM CORAM REF	NOTE NOTES
GOLF IV						
1.4 16V	X		97-04	6N0498625	**KCR27001**	
1.4 16V	X		97-04	1J0407625	**KCR27101**	
1.4 16V		X	97-04	1J0498477	**KMR27201**	SI ABS
1.6 - 1.8 - 1.8 T - 1.9 SDI - 1.9 TDI - 2.3 V5	X		97-05	6N0498625	**KCR27001**	
1.6 - 1.8 - 1.8 T - 1.9 SDI - 1.9 TDI - 2.3 V5	X		97-05	1J0407625	**KCR27101**	
1.6 - 1.8 - 1.8 T - 1.9 SDI - 1.9 TDI - 2.3 V5		X	97-05	1J0498477	**KMR27201**	SI ABS
1.6 16V	X		00-05	6N0498625	**KCR27001**	
1.6 16V	X		00-05	1J0407625	**KCR27101**	
1.6 16V		X	00-05	1J0498477	**KMR27201**	SI ABS
1.6 FSI	X		02-mag	6N0498625	**KCR27001**	
1.6 FSI	X		02-mag	1J0407625	**KCR27101**	
1.6 FSI		X	02-mag	1J0498477	**KMR27201**	SI ABS
1.8 4motion - 1.9 TDI 4motion - 2.3 V5 4motion	X	X	98-05	6N0498625	**KCR27001**	
1.8 4motion - 1.9 TDI 4motion - 2.3 V5 4motion	X	X	98-05	1J0407625	**KCR27101**	
1.8 T GTI		X	01-mag	1J0498477	**KMR27201**	SI ABS
2.0	X		98-04	6N0498625	**KCR27001**	
2.0	X		98-04	1J0407625	**KCR27101**	
2.0		X	98-04	1J0498477	**KMR27201**	SI ABS
2.0 4motion	X	X	00-05	6N0498625	**KCR27001**	
2.0 4motion	X	X	00-05	1J0407625	**KCR27101**	
2.0 BiFuel	X		02-mar	6N0498625	**KCR27001**	
2.0 BiFuel	X		02-mar	1J0407625	**KCR27101**	
2.0 BiFuel		X	02-mar	1J0498477	**KMR27201**	SI ABS
2.8 VR6 4motion	X	X	99-05	6N0498625	**KCR27001**	
2.8 VR6 4motion	X	X	99-05	1J0407625	**KCR27101**	
3.2 R32 4motion		X	02-mag	1J0407625	**KCR27101**	
GOLF IV Cabriolet						
1.6 - 1.8 - 1.9 TDI - 2.0	X		98-02	191498625A	**KCR27002**	
1.6 - 1.8 - 1.9 TDI - 2.0		X	98-02	191598625	**KCR529**	
GOLF IV Van						
1.9 SDI	X		98-04	6N0498625	**KCR27001**	
1.9 SDI	X		98-04	1J0407625	**KCR27101**	
1.9 SDI		X	98-04	1J0498477	**KMR27201**	SI ABS
1.9 TDI	X		97-04	6N0498625	**KCR27001**	
1.9 TDI	X		97-04	1J0407625	**KCR27101**	
1.9 TDI		X	97-04	1J0498477	**KMR27201**	SI ABS
1.9 TDI 4motion	X	X	00-01	6N0498625	**KCR27001**	
1.9 TDI 4motion	X	X	00-01	1J0407625	**KCR27101**	

follow VOLKSWAGEN

MODELLO MODEL	ASS.ANT. FRONT AXLE	ASS.POS. REAR AXLE	ANNO YEAR	RIF ORIGINALE ORIGINAL REF	RIF CORAM CORAM REF	NOTE NOTES
GOLF IV Variant						
1.4 16V - 1.6 - 1.9 SDI - 1.9 TDI - 2.0 - 2.3 V5	X		99-06	1J0407625	**KCR27101**	
1.4 16V - 1.6 - 1.9 SDI - 1.9 TDI - 2.0 - 2.3 V5		X	99-06	1J0498477	**KMR27201**	SI ABS
1.4 16V - 1.6 - 1.9 SDI - 2.3 V5	X		99-06	6N0498625	**KCR27001**	
1.6 16V - 1.8 T	X		00-06	1J0407625	**KCR27101**	
1.6 16V - 1.8 T		X	00-06	1J0498477	**KMR27201**	SI ABS
1.6 16V - 1.8 T - 1.9 TDI - 2.0	X		00-06	6N0498625	**KCR27001**	
1.6 FSI - 2.0 BiFuel	X		02-giu	6N0498625	**KCR27001**	
1.6 FSI - 2.0 BiFuel	X		02-giu	1J0407625	**KCR27101**	
1.6 FSI - 2.0 BiFuel		X	02-giu	1J0498477	**KMR27201**	SI ABS
1.8 4motion - 1.9 TDI 4motion - 2.0 4motion	X	X	99-06	1J0407625	**KCR27101**	
1.8 4motion - 2.0 4motion	X	X	99-06	6N0498625	**KCR27001**	
1.9 TDI 4motion	X	X	00-06	6N0498625	**KCR27001**	
2.3 V5 4motion - 2.8 V6 4motion	X	X	99-06	6N0498625	**KCR27001**	
2.3 V5 4motion - 2.8 V6 4motion	X	X	99-06	1J0407625	**KCR27101**	
GOLF PLUS						
1.2 TSI - 1.6 BiFuel - 1.6 TDI	X		set-13	1T0498621	**KMR27001**	SI ABS
1.2 TSI - 1.6 BiFuel - 1.6 TDI	X		set-13	1K0498621	**KMR27002**	SI ABS
1.4 16V - 1.6 - 2.0 TDI - 2.0 TDI 16V	X		mag-13	1T0498621	**KMR27001**	SI ABS
1.4 16V - 1.6 - 2.0 TDI - 2.0 TDI 16V	X		mag-13	1K0498621	**KMR27002**	SI ABS
1.4 FSI	X		05-giu	1T0498621	**KMR27001**	SI ABS
1.4 FSI	X		05-giu	1K0498621	**KMR27002**	SI ABS
1.4 TSI	X		giu-13	1T0498621	**KMR27001**	SI ABS
1.4 TSI	X		giu-13	1K0498621	**KMR27002**	SI ABS
1.6 FSI	X		04-ago	1T0498621	**KMR27001**	SI ABS
1.6 FSI	X		04-ago	1K0498621	**KMR27002**	SI ABS
1.6 MultiFuel	X		lug-13	1T0498621	**KMR27001**	SI ABS
1.6 MultiFuel	X		lug-13	1K0498621	**KMR27002**	SI ABS
1.9 TDI	X		05-set	1T0498621	**KMR27001**	SI ABS
1.9 TDI	X		05-set	1K0498621	**KMR27002**	SI ABS
2.0 FSI	X		05-ago	1T0498621	**KMR27001**	SI ABS
2.0 FSI	X		05-ago	1K0498621	**KMR27002**	SI ABS

follow VOLKSWAGEN

MODELLO MODEL	ASS.ANT. FRONT AXLE	ASS.POS. REAR AXLE	ANNO YEAR	RIF ORIGINALE ORIGINAL REF	RIF CORAM CORAM REF	NOTE NOTES
GOLF PLUS V						
Tutti i tipi/All types/Tous types		X		8V0598611A	**KMR27003**	SI ABS
1.2 TSI - 1.6 BiFuel - 1.6 TDI		X	set-13	8V0598611A	**KMR27003**	SI ABS
1.4 16V - 1.6 - 2.0 TDI - 2.0 TDI 16V		X	mag-13	8V0598611A	**KMR27003**	SI ABS
1.4 FSI		X	05-giu	8V0598611A	**KMR27003**	SI ABS
1.4 TSI		X	giu-13	8V0598611A	**KMR27003**	SI ABS
1.6 FSI		X	04-ago	8V0598611A	**KMR27003**	SI ABS
1.6 MultiFuel		X	lug-13	8V0598611A	**KMR27003**	SI ABS
1.9 TDI		X	05-set	8V0598611A	**KMR27003**	SI ABS
2.0 FSI		X	05-ago	8V0598611A	**KMR27003**	SI ABS
GOLF SPORTSVAN						
1.0 TSI	X		15->	1K0498621	**KMR27002**	SI ABS
1.2 TSI - 1.4 TSI - 1.4 TSI MultiFuel - 1.6 - 1.6 TDI - 2.0 TDI	X		14->	1K0498621	**KMR27002**	SI ABS
1.5 TSI	X		17->	1K0498621	**KMR27002**	SI ABS
GOLF SPORTSVAN VII						
1.0 TSI		X	15->	8V0598611A	**KMR27003**	SI ABS
1.2 TSI - 1.4 TSI - 1.4 TSI MultiFuel - 1.6 - 1.6 TDI		X	14->	8V0598611A	**KMR27003**	SI ABS
1.5 TSI		X	17->	8V0598611A	**KMR27003**	SI ABS
2.0 TDI		X	14-17	8V0598611A	**KMR27003**	SI ABS

follow VOLKSWAGEN

MODELLO MODEL	ASS.ANT. FRONT AXLE	ASS.POS. REAR AXLE	ANNO YEAR	RIF ORIGINALE ORIGINAL REF	RIF CORAM CORAM REF	NOTE NOTES
GOLF V						
1.4 16V - 1.6 FSI - 1.9 TDI - 2.0 TDI 16V	X		03-ago	1T0498621	**KMR27001**	SI ABS
1.4 16V - 1.6 FSI - 1.9 TDI - 2.0 TDI 16V	X		03-ago	1K0498621	**KMR27002**	SI ABS
1.4 16V - 1.6 FSI - 1.9 TDI - 2.0 TDI 16V		X	03-ago	8V0598611A	**KMR27003**	SI ABS
1.4 FSI	X		03-giu	1T0498621	**KMR27001**	SI ABS
1.4 FSI	X		03-giu	1K0498621	**KMR27002**	SI ABS
1.4 FSI		X	03-giu	8V0598611A	**KMR27003**	SI ABS
1.4 TSI - 2.0		X	05-ago	8V0598611A	**KMR27003**	SI ABS
1.4 TSI - 3.2 R32 4motion	X		05-ago	1T0498621	**KMR27001**	SI ABS
1.4 TSI - 3.2 R32 4motion	X		05-ago	1K0498621	**KMR27002**	SI ABS
1.6 - 1.9 TDI 4motion - 2.0 FSI - 2.0 FSI 4motion - 2.0 SDI	X		04-ago	1T0498621	**KMR27001**	SI ABS
1.6 - 1.9 TDI 4motion - 2.0 FSI - 2.0 FSI 4motion - 2.0 SDI	X		04-ago	1K0498621	**KMR27002**	SI ABS
1.6 - 2.0 FSI - 2.0 SDI - 2.0 TDI		X	04-ago	8V0598611A	**KMR27003**	SI ABS
1.6 MultiFuel		X	07-ago	8V0598611A	**KMR27003**	SI ABS
2.0	X		06-ago	1T0498621	**KMR27001**	SI ABS
2.0	X		06-ago	1K0498621	**KMR27002**	SI ABS
2.0 GTI	X		04-set	1T0498621	**KMR27001**	SI ABS
2.0 GTI		X	04-set	8V0598611A	**KMR27003**	SI ABS
2.0 TDI - 2.0 TDI 16V 4motion	X		03-ago	1K0498621	**KMR27002**	SI ABS
2.0 TDI - 2.0 TDI 16V 4motion - 2.0 TDI 4motion	X		04-ago	1T0498621	**KMR27001**	SI ABS
2.0 TDI 4motion	X		04-ago	1K0498621	**KMR27002**	SI ABS
GOLF V Variant						
1.4 - 1.4 TSI - 1.6 - 1.9 TDI - 2.0 - 2.0 TDI - 2.0 TDI 16V	X		07-set	1T0498621	**KMR27001**	SI ABS
1.9 TDI 4motion	X		08-set	1T0498621	**KMR27001**	SI ABS
GOLF VAN III Variant						
1.4	X		93-95	191498625A	**KCR27002**	
1.4		X	93-95	191598625	**KCR529**	
1.8 - 1.9 - 1.9 TDI	X		93-99	191498625A	**KCR27002**	
1.8 - 1.9 - 1.9 TDI		X	93-99	191598625	**KCR529**	
GOLF VAN IV Variant						
1.6	X		00-06	1J0407625	**KCR27101**	
1.6		X	00-06	1J0498477	**KMR27201**	SI ABS
1.9 SDI - 1.9 TDI	X		99-06	1J0407625	**KCR27101**	
1.9 SDI - 1.9 TDI		X	99-06	1J0498477	**KMR27201**	SI ABS
GOLF VAN VI Variant						
1.6 TDI	X		09-dic	1T0498621	**KMR27001**	SI ABS
1.6 TDI BlueMotion	X		set-14	1T0498621	**KMR27001**	SI ABS

follow VOLKSWAGEN

MODELLO MODEL	ASS.ANT. FRONT AXLE	ASS.POS. REAR AXLE	ANNO YEAR	RIF ORIGINALE ORIGINAL REF	RIF CORAM CORAM REF	NOTE NOTES
GOLF VI						
1.2 TSI - 1.4 - 1.4 TSI - 1.6 - 1.6 MultiFuel	X		08-dic	1T0498621	**KMR27001**	SI ABS
1.2 TSI - 1.4 - 1.4 TSI - 1.6 - 1.6 MultiFuel	X		08-dic	1K0498621	**KMR27002**	SI ABS
1.2 TSI - 1.4 - 1.4 TSI - 1.6 - 1.6 MultiFuel - 2.0 TDI		X	08-dic	8V0598611A	**KMR27003**	SI ABS
1.6 BiFuel - 1.6 TDI		X	09-dic	8V0598611A	**KMR27003**	SI ABS
1.6 BiFuel - 1.6 TDI - 2.0 GTI - 2.0 TDI 4motion	X		09-dic	1T0498621	**KMR27001**	SI ABS
1.6 BiFuel - 1.6 TDI - 2.0 TDI 4motion	X		09-dic	1K0498621	**KMR27002**	SI ABS
1.8 TSI	X		09-nov	1T0498621	**KMR27001**	SI ABS
1.8 TSI	X		09-nov	1K0498621	**KMR27002**	SI ABS
2.0 GTi		X	set-13	8V0598611A	**KMR27003**	SI ABS
2.0 R 4motion	X		set-13	1T0498621	**KMR27001**	SI ABS
2.0 TDI	X		ago-13	1T0498621	**KMR27001**	SI ABS
2.0 TDI	X		ago-13	1K0498621	**KMR27002**	SI ABS
Blue E-motion	X		ott-13	1T0498621	**KMR27001**	SI ABS
Blue E-motion	X		ott-13	1K0498621	**KMR27002**	SI ABS
Blue E-motion		X	ott-13	8V0598611A	**KMR27003**	SI ABS
GOLF VI Cabriolet						
1.2 TSI - 1.4 TSI - 1.6 TDI - 2.0 TDI	X		nov-16	1T0498621	**KMR27001**	SI ABS
1.2 TSI - 1.4 TSI - 1.6 TDI - 2.0 TDI		X	nov-16	8V0598611A	**KMR27003**	SI ABS
1.2 TSI 16V - 1.4 TSI - 2.0 TDI - 2.0 TSI	X		13-16	1K0498621	**KMR27002**	SI ABS
1.2 TSI 16V - 2.0 R - 2.0 TSI		X	13-16	8V0598611A	**KMR27003**	SI ABS
2.0 GTI	X		dic-16	1T0498621	**KMR27001**	SI ABS
2.0 GTI		X	dic-16	8V0598611A	**KMR27003**	SI ABS
2.0 R	X		13-16	1T0498621	**KMR27001**	SI ABS
GOLF VI Variant						
1.2 TSI - 1.4 - 1.4 TSI - 1.6 - 1.6 TDI - 1.6 TDI 4motion	X		set-13	1T0498621	**KMR27001**	SI ABS
1.6 BiFuel	X		09-ott	1T0498621	**KMR27001**	SI ABS
2.0 TDI - 2.0 TSI	X		set-13	1T0498621	**KMR27001**	SI ABS

follow VOLKSWAGEN

MODELLO MODEL	ASS.ANT. FRONT AXLE	ASS.POS. REAR AXLE	ANNO YEAR	RIF ORIGINALE ORIGINAL REF	RIF CORAM CORAM REF	NOTE NOTES
GOLF VII						
1.0 TSI	X		15->	1K0498621	**KMR27002**	SI ABS
1.0 TSI		X	15-18	8V0598611A	**KMR27003**	SI ABS
1.2 TSI - 1.4 TSI - 1.6 TDI - 1.6 TDI 4motion -	X		12->	1K0498621	**KMR27002**	SI ABS
1.2 TSI - 1.4 TSI - 1.6 TDI - 2.0 TDI		X	12->	8V0598611A	**KMR27003**	SI ABS
1.4 GTE Hybrid - 1.6	X		14->	1K0498621	**KMR27002**	SI ABS
1.4 GTE Hybrid - 1.6		X	14->	8V0598611A	**KMR27003**	SI ABS
1.4 TGI CNG - 1.4 TSI MultiFuel - 2.0 GTD - 2.0 GTI		X	13->	8V0598611A	**KMR27003**	SI ABS
1.4 TGI CNG - 1.4 TSI MultiFuel - 2.0 R 4motion	X		13->	1K0498621	**KMR27002**	SI ABS
1.5 TGI	X		18->	1K0498621	**KMR27002**	SI ABS
1.5 TGI - 2.0 GTI TCR		X	18->	8V0598611A	**KMR27003**	SI ABS
1.5 TSI	X		17->	1K0498621	**KMR27002**	SI ABS
1.5 TSI		X	17->	8V0598611A	**KMR27003**	SI ABS
2.0 GTI Clubsport		X	16-17	8V0598611A	**KMR27003**	SI ABS
2.0 GTI Clubsport S		X	16->	8V0598611A	**KMR27003**	SI ABS
2.0 TDI - 2.0 TDI 4motion	X		12->	1K0498621	**KMR27002**	SI ABS
e-Golf	X		14-17	1K0498621	**KMR27002**	SI ABS
e-Golf		X	14-17	8V0598611A	**KMR27003**	SI ABS
GOLF VII Van						
1.6 Tdi BlueMotion	X		12->	1K0498621	**KMR27002**	SI ABS
1.6 Tdi BlueMotion		X	12->	8V0598611A	**KMR27003**	SI ABS
GOLF VII Variant						
1.0 TSI		X	15-18	8V0598611A	**KMR27003**	SI ABS
1.0 TSI - 2.0 GTD - 2.0 R 4motion	X		15->	1K0498621	**KMR27002**	SI ABS
1.2 TSI - 1.4 TSI - 1.4 TGI CNG - 1.4 TSI MultiFuel	X		13->	1K0498621	**KMR27002**	SI ABS
1.2 TSI - 1.4 TSI - 1.4 TSI MultiFuel		X	13-17	8V0598611A	**KMR27003**	SI ABS
1.4 TGI CNG		X	13->	8V0598611A	**KMR27003**	SI ABS
1.5 TGI		X	18->	8V0598611A	**KMR27003**	SI ABS
1.5 TSI	X		17->	1K0498621	**KMR27002**	SI ABS
1.5 TSI		X	17->	8V0598611A	**KMR27003**	SI ABS
1.6	X		14->	1K0498621	**KMR27002**	SI ABS
1.6		X	14-17	8V0598611A	**KMR27003**	SI ABS
1.6 TDI - 2.0 TDI	X		13->	1K0498621	**KMR27002**	SI ABS
1.6 TDI - 1.6 TDI 4motion - 2.0 TDI		X	13-17	8V0598611A	**KMR27003**	SI ABS
1.6 TDI 4motion	X		13->	1T0498621	**KMR27001**	SI ABS
1.8 TSI 4motion		X	16->	8V0598611A	**KMR27003**	SI ABS
2.0 GTD		X	15-17	8V0598611A	**KMR27003**	SI ABS
2.0 TDI 4motion	X		13-18	1T0498621	**KMR27001**	SI ABS

follow VOLKSWAGEN

MODELLO MODEL	ASS.ANT. FRONT AXLE	ASS.POS. REAR AXLE	ANNO YEAR	RIF ORIGINALE ORIGINAL REF	RIF CORAM CORAM REF	NOTE NOTES
JETTA I						
1.1 - 1.3		X	79-84	191598625	**KCR529**	
1.5 - 1.6		X	78-84	191598625	**KCR529**	
1.5 D		X	78-80	191598625	**KCR529**	
1.6 D		X	80-84	191598625	**KCR529**	
1.6 GLI		X	78-82	191598625	**KCR529**	
1.6 TD - 1.8		X	82-84	191598625	**KCR529**	
JETTA II						
1.3	X		84-87	6N0498625	**KCR27001**	
1.3 Cat - 1.8 Cat	X		87-91	6N0498625	**KCR27001**	
1.3 Cat - 1.8 Cat	X		87-91	191498625A	**KCR27002**	
1.3 Cat - 1.8 Cat		X	87-91	191598625	**KCR529**	
1.4		X	84-87	191598625	**KCR529**	
1.6	X		84-92	6N0498625	**KCR27001**	
1.6	X		84-92	191498625A	**KCR27002**	
1.6		X	84-92	191598625	**KCR529**	
1.6 D - 1.6 TD - 1.8	X		84-91	6N0498625	**KCR27001**	
1.6 D - 1.6 TD - 1.8	X		84-91	191498625A	**KCR27002**	
1.6 D - 1.6 TD - 1.8		X	84-91	191598625	**KCR529**	
1.8 16V	X		86-91	6N0498625	**KCR27001**	
1.8 16V	X		86-91	191498625A	**KCR27002**	
1.8 16V		X	86-91	191598625	**KCR529**	
1.8 Syncro	X		87-88	6N0498625	**KCR27001**	
1.8 Syncro	X		87-91	191498625A	**KCR27002**	
JETTA III						
1.4 TSI - 1.6	X		06-ott	1T0498621	**KMR27001**	SI ABS
1.6 FSI - 1.9 TDI - 2.0 FSI - 2.0 TDI - 2.0 TDI 16V	X		05-ott	1T0498621	**KMR27001**	SI ABS
1.6 TDI	X		09-ott	1T0498621	**KMR27001**	SI ABS
2.0 TFSI	X		05-ott	1T0498621	**KMR27001**	SI ABS
2.5	X		06-ott	1T0498621	**KMR27001**	SI ABS

follow VOLKSWAGEN

MODELLO MODEL	ASS.ANT. FRONT AXLE	ASS.POS. REAR AXLE	ANNO YEAR	RIF ORIGINALE ORIGINAL REF	RIF CORAM CORAM REF	NOTE NOTES
JETTA IV						
1.2 TSI - 2.0 TDI - 2.5		X	10->	8V0598611A	**KMR27003**	SI ABS
1.2 TSI - 2.5	X		10->	1T0498621	**KMR27001**	SI ABS
1.2 TSI 16V - 1.8 TSI	X		14->	1T0498621	**KMR27001**	SI ABS
1.4 TSI - 1.4 TSI Hybrid - 1.6 - 2.0 TDI	X		11->	1T0498621	**KMR27001**	SI ABS
1.4 TSI - 1.4 TSI Hybrid - 1.6 - 2.0 TDI		X	11->	8V0598611A	**KMR27003**	SI ABS
1.6 TDI	X		ott-14	1T0498621	**KMR27001**	SI ABS
1.6 TDI		X	ott-15	8V0598611A	**KMR27003**	SI ABS
2.0 - 2.0 TI	X		ott-17	1T0498621	**KMR27001**	SI ABS
2.0 - 2.0 TSI		X	ott-17	8V0598611A	**KMR27003**	SI ABS
KAEFER						
1200 1.2		X	60-85	191598625	**KCR529**	
1302 1.2		X	69-72	191598625	**KCR529**	
1302 1.6		X	70-74	191598625	**KCR529**	
13021.3		X	70-75	191598625	**KCR529**	
1303 1.2		X	72-76	191598625	**KCR529**	
1303 1.3		X	72-75	191598625	**KCR529**	
13030 1.6 - 1303 LS,S 1.6		X	72-79	191598625	**KCR529**	
1500 1.5		X	66-73	191598625	**KCR529**	
1500 1.6		X	70-73	191598625	**KCR529**	
1600		X	73-92	191598625	**KCR529**	
1600 i		X	92-03	191598625	**KCR529**	
KAEFER Cabriolet						
1302 1.3 - 1302 1.6 - 1303 1.6		X	70-74	191598625	**KCR529**	
1302,1303 1.6		X	70-79	191598625	**KCR529**	
1303 1.2		X	75-79	191598625	**KCR529**	
1303 1.3		X	70-81	191598625	**KCR529**	
1500 1.5		X	66-70	191598625	**KCR529**	
1500 1.6		X	69-70	191598625	**KCR529**	
LUPO						
1.0 - 1.4 16V - 1.7 SDI	X		98-05	6N0498625	**KCR27001**	
1.0 - 1.4 16V - 1.7 SDI		X	98-05	6X0598477	**KMR27202**	SI ABS
1.4 - 1.6 GTI	X		00-05	6N0498625	**KCR27001**	
1.4 - 1.6 GTI		X	00-05	6X0598477	**KMR27202**	SI ABS
1.4 FSI	X		01-mag	6N0498625	**KCR27001**	
1.4 FSI		X	01-mag	6X0598477	**KMR27202**	SI ABS
1.4 TDI	X		99-05	6N0498625	**KCR27001**	
1.4 TDI		X	99-05	6X0598477	**KMR27202**	SI ABS

follow VOLKSWAGEN

MODELLO MODEL	ASS.ANT. FRONT AXLE	ASS.POS. REAR AXLE	ANNO YEAR	RIF ORIGINALE ORIGINAL REF	RIF CORAM CORAM REF	NOTE NOTES
NEW BEETLE						
1.4	X		01-ott	6N0498625	**KCR27001**	
1.4	X		01-ott	1J0407625	**KCR27101**	
1.4		X	01-ott	1J0498477	**KMR27201**	SI ABS
1.6 - 1.8 T	X		99-10	6N0498625	**KCR27001**	
1.6 - 1.8 T	X		99-10	1J0407625	**KCR27101**	
1.6 - 1.8 T		X	99-10	1J0498477	**KMR27201**	SI ABS
1.9 TDI - 2.0	X		98-10	6N0498625	**KCR27001**	
1.9 TDI - 2.0	X		98-10	1J0407625	**KCR27101**	
1.9 TDI - 2.0		X	98-10	1J0498477	**KMR27201**	SI ABS
2.3 V5	X		00-10	6N0498625	**KCR27001**	
2.3 V5	X		00-10	1J0407625	**KCR27101**	
2.3 V5		X	00-10	1J0498477	**KMR27201**	SI ABS
2.5	X		05-ott	6N0498625	**KCR27001**	
2.5	X		05-ott	1J0407625	**KCR27101**	
2.5		X	05-ott	1J0498477	**KMR27201**	SI ABS
RSI 3.2 4motion	X	X	00-01	6N0498625	**KCR27001**	
RSI 3.2 4motion	X	X	00-01	1J0407625	**KCR27101**	
NEW BEETLE Cabriolet						
1.4 - 1.6 - 1.8 T - 1.9 TDI	X		03-ott	6N0498625	**KCR27001**	
1.4 - 1.6 - 1.8 T - 1.9 TDI	X		03-ott	1J0407625	**KCR27101**	
1.4 - 1.6 - 1.8 T - 1.9 TDI		X	03-ott	1J0498477	**KMR27201**	SI ABS
2.0	X		02-ott	6N0498625	**KCR27001**	
2.0	X		02-ott	1J0407625	**KCR27101**	
2.0		X	02-ott	1J0498477	**KMR27201**	SI ABS
2.5	X		05-ott	6N0498625	**KCR27001**	
2.5	X		05-ott	1J0407625	**KCR27101**	
2.5		X	05-ott	1J0498477	**KMR27201**	SI ABS

KIT RUOTA
WHEEL BEARING KITS
KITS ROULEMENTS ROUES

follow VOLKSWAGEN

MODELLO MODEL	ASS.ANT. FRONT AXLE	ASS.POS. REAR AXLE	ANNO YEAR	RIF ORIGINALE ORIGINAL REF	RIF CORAM CORAM REF	NOTE NOTES
PASSAT						
1.4 TSI - 1.8 TSI	X		lug-14	1T0498621	**KMR27001**	SI ABS
1.4 TSI EcoFuel - 1.6 TDI	X		set-14	1T0498621	**KMR27001**	SI ABS
1.4 TSI MultiFuel	X		ott-14	1T0498621	**KMR27001**	SI ABS
1.6 - 1.8	X		88-96	191498625A	**KCR27002**	
1.6 - 1.9 TDI	X		96-05	4B0498625	**KCR27102**	
1.6 - 1.9 TDI - 2.0 FSI - 2.0 FSI 4motion	X		05-ott	1T0498621	**KMR27001**	SI ABS
1.6 FSI	X		05-ago	1T0498621	**KMR27001**	SI ABS
1.6 TD - 2.0 16V	X		88-93	191498625A	**KCR27002**	
1.8 - 1.8 Syncro/4motion - 1.8 T - 2.3 VR5	X		96-00	4B0498625	**KCR27102**	
1.8 16V	X		88-89	191498625A	**KCR27002**	
1.8 G60 Syncro	X	X	88-96	191498625A	**KCR27002**	
1.8 T 20V - 2.0	X		00-05	4B0498625	**KCR27102**	
1.9 D	X		89-93	191498625A	**KCR27002**	
1.9 TD - 2.8 VR6	X		91-96	191498625A	**KCR27002**	
1.9 TDI 4motion		X	99-05	4B0498625	**KCR27102**	
1.9 TDI Syncro/4motion - 2.3 VR5 Syncro/4motion	X	X	97-00	4B0498625	**KCR27102**	
2.0	X		90-96	191498625A	**KCR27002**	
2.0 4motion	X	X	00-05	4B0498625	**KCR27102**	
2.0 BlueTDI	X		09-ott	1T0498621	**KMR27001**	SI ABS
2.0 Syncro	X	X	89-96	191498625A	**KCR27002**	
2.0 TDI - 2.0 TDI 4motion	X		mag-14	1T0498621	**KMR27001**	SI ABS
2.0 TDI 16V - 2.0 TDI 16V 4motion	X		05-ott	1T0498621	**KMR27001**	SI ABS
2.0 TSI	X		ott-14	1T0498621	**KMR27001**	SI ABS
2.3 V5 4motion - 2.5 TDI 4motion - 2.8 4motion		X	00-05	4B0498625	**KCR27102**	
2.5 TDI Syncro/4motion		X	98-00	4B0498625	**KCR27102**	
2.8 Syncro		X	97-99	4B0498625	**KCR27102**	
2.8 V6 Syncro/4motion		X	96-00	4B0498625	**KCR27102**	
3.2 FSI 4motion	X		05-ott	1T0498621	**KMR27001**	SI ABS
3.6 FSI 4motion	X		nov-14	1T0498621	**KMR27001**	SI ABS
3.6 R36 4motion	X		07-ott	1T0498621	**KMR27001**	SI ABS
PASSAT ALLTRACK						
1.4 TSI - 2.0 TDI 4motion - 2.0 TSI 4motion	X		15->	1K0498621	**KMR27002**	SI ABS
1.8 TSI - 2.0 TDI - 2.0 TDI 4motion - 2.0 TSI 4motion	X		dic-14	1T0498621	**KMR27001**	SI ABS
PASSAT B1						
1.3		X	73-80	191598625	**KCR529**	
1.5		X	73-75	191598625	**KCR529**	
1.5 D		X	77-80	191598625	**KCR529**	
1.6		X	75-80	191598625	**KCR529**	

follow VOLKSWAGEN

MODELLO MODEL	ASS.ANT. FRONT AXLE	ASS.POS. REAR AXLE	ANNO YEAR	RIF ORIGINALE ORIGINAL REF	RIF CORAM CORAM REF	NOTE NOTES
PASSAT B1 Variant						
1.3		X	73-80	191598625	**KCR529**	
1.5		X	73-75	191598625	**KCR529**	
1.5 D		X	77-80	191598625	**KCR529**	
1.6		X	75-80	191598625	**KCR529**	
1.6 D		X	79-80	191598625	**KCR529**	
1.6 i		X	78-80	191598625	**KCR529**	
PASSAT B2						
1.3		X	80-86	191598625	**KCR529**	
1.6		X	79-88	191598625	**KCR529**	
1.6		X	80-88	191598625	**KCR529**	
1.6 TD		X	82-88	191598625	**KCR529**	
1.8 - 2.0		X	83-88	191598625	**KCR529**	
1.9		X	81-83	191598625	**KCR529**	
2.2		X	85-88	191598625	**KCR529**	
PASSAT B2 Tre volumi						
1.6		X	84-88	191598625	**KCR529**	
1.6 TD - 1.8 - 2.2		X	85-88	191598625	**KCR529**	
PASSAT B2 Variant						
1.3		X	80-86	191598625	**KCR529**	
1.6 - 1.6 D		X	80-88	191598625	**KCR529**	
1.6 TD		X	82-88	191598625	**KCR529**	
1.8 - 2.0		X	83-88	191598625	**KCR529**	
1.9		X	81-83	191598625	**KCR529**	
2.2		X	85-88	191598625	**KCR529**	
PASSAT B3/B4						
1.6 - 1.8 - 2.0 16V		X	88-96	191598625	**KCR529**	
1.6 TD		X	88-93	191598625	**KCR529**	
1.8 16V		X	88-89	191598625	**KCR529**	
1.9		X	89-93	191598625	**KCR529**	
1.9 TD - 2.8 VR6		X	91-96	191598625	**KCR529**	
1.9 TDI		X	93-96	191598625	**KCR529**	
2.0		X	90-96	191598625	**KCR529**	
2.0 Sycro		X	89-93	191598625	**KCR529**	

follow VOLKSWAGEN

MODELLO MODEL	ASS.ANT. FRONT AXLE	ASS.POS. REAR AXLE	ANNO YEAR	RIF ORIGINALE ORIGINAL REF	RIF CORAM CORAM REF	NOTE NOTES
PASSAT B3/B4 Variant						
1.6 - 1.8 - 2.0 16V		X	88-95	191598625	**KCR529**	
1.6 TD		X	88-93	191598625	**KCR529**	
1.8 - 2.0 16V		X	88-97	191598625	**KCR529**	
1.8 16V		X	88-89	191598625	**KCR529**	
1.9 D		X	89-93	191598625	**KCR529**	
1.9 TD - 2.8 VR6		X	91-97	191598625	**KCR529**	
1.9 TDI		X	93-97	191598625	**KCR529**	
2.0		X	90-97	191598625	**KCR529**	
PASSAT B5.5						
4.0 W8 4motion	X	X	01-apr	8E0598611B	**KMR27005**	SI ABS
PASSAT B5.5 Variant						
4.0 W8 4motion	X	X	01-apr	8E0598611B	**KMR27005**	SI ABS
PASSAT CC						
1.4 TSI MultiFuel	X		11-dic	1T0498621	**KMR27001**	SI ABS
1.8 TSI - 2.0 TDI - 2.0 TSI	X		08-dic	1T0498621	**KMR27001**	SI ABS
2.0 BlueTDI	X		09-ott	1T0498621	**KMR27001**	SI ABS
2.0 TDI 4motion	X		09-dic	1T0498621	**KMR27001**	SI ABS
3.6 FSI 4motion	X		08-nov	1T0498621	**KMR27001**	SI ABS

follow VOLKSWAGEN

MODELLO MODEL	ASS.ANT. FRONT AXLE	ASS.POS. REAR AXLE	ANNO YEAR	RIF ORIGINALE ORIGINAL REF	RIF CORAM CORAM REF	NOTE NOTES
PASSAT Variant						
1.4 TSI - 1.8 TSI	X		lug-14	1T0498621	**KMR27001**	SI ABS
1.4 TSI 4motion - 2.0 TSI 4motion	X		15->	4B0498625	**KCR27102**	
1.4 TSI EcoFuel - 1.6 TDI	X		set-14	1T0498621	**KMR27001**	SI ABS
1.4 TSI MultiFuel	X		ott-14	1T0498621	**KMR27001**	SI ABS
1.6	X		88-91	191498625A	**KCR27002**	
1.6	X		94-95	191498625A	**KCR27002**	
1.6 - 1.9 TDI	X		96-05	4B0498625	**KCR27102**	
1.6 - 1.9 TDI - 2.0 FSI - 2.0 FSI 4motion	X		05-ott	1T0498621	**KMR27001**	SI ABS
1.6 FSI	X		05-ago	1T0498621	**KMR27001**	SI ABS
1.6 TD - 2.0 Syncro	X		88-93	191498625A	**KCR27002**	
1.8	X		88-97	191498625A	**KCR27002**	
1.8 - 1.8 T	X		97-00	4B0498625	**KCR27102**	
1.8 16V	X		88-89	191498625A	**KCR27002**	
1.8 G 60 Syncro	X	X	88-97	191498625A	**KCR27002**	
1.8 Syncro/4motion	X	X	97-00	4B0498625	**KCR27102**	
1.8 T 20V - 2.0	X		00-05	4B0498625	**KCR27102**	
1.9 D	X		89-93	191498625A	**KCR27002**	
1.9 TD - 2.8 VR6	X		91-97	191498625A	**KCR27002**	
1.9 TDI	X		93-97	191498625A	**KCR27002**	
1.9 TDI 4motion		X	99-05	4B0498625	**KCR27102**	
1.9 TDI Syncro/4motion - 2.3 VR5 Syncro/4motion	X	X	97-00	4B0498625	**KCR27102**	
2.0	X		90-97	191498625A	**KCR27002**	
2.0 4motion	X	X	00-05	4B0498625	**KCR27102**	
2.0 BlueTDI	X		09-ott	1T0498621	**KMR27001**	SI ABS
2.0 Syncro	X	X	90-97	191498625A	**KCR27002**	
2.0 TDI - 2.0 TDI 4motion	X		mag-14	1T0498621	**KMR27001**	SI ABS
2.0 TDI 16V - 2.0 TDI 16V 4motion	X		05-ott	1T0498621	**KMR27001**	SI ABS
2.0 TDI 4motion	X		14->	4B0498625	**KCR27102**	
2.0 TSI	X		ott-14	1T0498621	**KMR27001**	SI ABS
2.3 VR5	X		97-00	4B0498625	**KCR27102**	
2.3 VR5 4motion - 2.5 TDI 4motion - 2.8 4motion		X	00-05	4B0498625	**KCR27102**	
2.5 TDI Syncro/4motion		X	98-00	4B0498625	**KCR27102**	
2.8 V6 Syncri/4motion		X	97-00	4B0498625	**KCR27102**	
2.9 VR6 Syncro		X	94-97	191498625A	**KCR27002**	
3.2 FSI 4motion	X		05-ott	1T0498621	**KMR27001**	SI ABS
3.6 FSI 4motion	X		nov-14	1T0498621	**KMR27001**	SI ABS
3.6 R36 4motion	X		07-ott	1T0498621	**KMR27001**	SI ABS

follow VOLKSWAGEN

MODELLO MODEL	ASS.ANT. FRONT AXLE	ASS.POS. REAR AXLE	ANNO YEAR	RIF ORIGINALE ORIGINAL REF	RIF CORAM CORAM REF	NOTE NOTES
POLO						
0.9		X	75-81	191598625	**KCR529**	
1.0		X	81-92	191598625	**KCR529**	
1.0 - 1.0 TSI - 1.2 TSI 16V - 1.6	X		14->	6C0407621	**KMR27102**	SI ABS
1.0 - 1.0 TSI - 1.2 TSI 16V - 1.6		X	14->	6Q0598611	**KMR27103**	SI ABS
1.0 - 1.4 - 1.4 16V - 1.4 TDI - 1.6 16V GTI	X		99-01	6N0498625	**KCR27001**	
1.0 - 1.4 - 1.4 16V - 1.4 TDI - 1.6 16V GTI - 1.9 D - 1.9 SDI		X	99-01	6X0598477	**KMR27202**	SI ABS
1.0 Cat	X		89-94	6N0498625	**KCR27001**	
1.0 Cat		X	89-94	191598625	**KCR529**	
1.0 MPi	X		18->	6C0407621	**KMR27102**	SI ABS
1.0 TGI - 1.0 TSI	X		17->	6C0407621	**KMR27102**	SI ABS
1.1		X	75-89	191598625	**KCR529**	
1.2	X		02->	6C0407621	**KMR27102**	SI ABS
1.2		X	02->	6Q0598611	**KMR27103**	SI ABS
1.2 12V	X		02-set	6C0407621	**KMR27102**	SI ABS
1.2 12V - 1.4 16V - 1.9 SDI - 1.9 TDI		X	01-set	6Q0598611	**KMR27103**	SI ABS
1.2 TSI - 1.2 TDI - 1.6 TDI	X		09->	6C0407621	**KMR27102**	SI ABS
1.2 TSI - 1.2 TDI - 1.6 TDI		X	09->	6Q0598611	**KMR27103**	SI ABS
1.3		X	76-88	191598625	**KCR529**	
1.3 Cat	X		87-94	6N0498625	**KCR27001**	
1.3 Cat		X	87-94	191598625	**KCR529**	
1.3 D		X	86-90	191598625	**KCR529**	
1.4	X		set-14	6C0407621	**KMR27102**	SI ABS
1.4		X	set-14	6Q0598611	**KMR27103**	SI ABS
1.4 16V	X		01-set	6C0407621	**KMR27102**	SI ABS
1.4 BiFuel	X		06-nov	6C0407621	**KMR27102**	SI ABS
1.4 BiFuel		X	06-nov	6Q0598611	**KMR27103**	SI ABS
1.4 D	X		90-94	6N0498625	**KCR27001**	
1.4 D		X	90-94	191598625	**KCR529**	
1.4 FSI	X		02-giu	6C0407621	**KMR27102**	SI ABS
1.4 FSI		X	02-giu	6Q0598611	**KMR27103**	SI ABS
1.4 GTI	X		10->	6C0407621	**KMR27102**	SI ABS
1.4 GTI		X	10->	6Q0598611	**KMR27103**	SI ABS
1.4 TDI	X		05->	6C0407621	**KMR27102**	SI ABS
1.4 TDI		X	05->	6Q0598611	**KMR27103**	SI ABS
1.4 TSI	X		12->	6C0407621	**KMR27102**	SI ABS
1.4 TSI		X	12->	6Q0598611	**KMR27103**	SI ABS
1.6 16V - 1.8 GTi Cup Edition	X		06-set	6C0407621	**KMR27102**	SI ABS
1.6 16V - 1.8 GTi Cup Edition		X	06-set	6Q0598611	**KMR27103**	SI ABS
1.6 BiFuel	X		11->	6C0407621	**KMR27102**	SI ABS
1.6 BiFuel		X	11->	6Q0598611	**KMR27103**	SI ABS
1.7 SDI	X		97-01	6N0498625	**KCR27001**	
1.7 SDI		X	97-99	6X0598477	**KMR27202**	SI ABS
1.7 SDI		X	88-95	191598625	**KCR529**	
1.8 GTI	X		05-set	6C0407621	**KMR27102**	SI ABS
1.8 GTI		X	05-set	6Q0598611	**KMR27103**	SI ABS

follow VOLKSWAGEN

MODELLO MODEL	ASS.ANT. FRONT AXLE	ASS.POS. REAR AXLE	ANNO YEAR	RIF ORIGINALE ORIGINAL REF	RIF CORAM CORAM REF	NOTE NOTES
POLO CLASSIC						
1.0		X	85-94	191598625	**KCR529**	
1.3		X	85-87	191598625	**KCR529**	
1.3 Cat		X	87-94	191598625	**KCR529**	
1.3 D		X	86-88	191598625	**KCR529**	
1.4 D		X	90-94	191598625	**KCR529**	
100 1.6		X	95-01	6X0598477	**KMR27202**	SI ABS
100 1.6	X		95-01	191498625A	**KCR27002**	
110 1.9 TDI		X	98-02	6X0598477	**KMR27202**	SI ABS
110 1.9 TDI	X		98-02	191498625A	**KCR27002**	
57 1.7 SDI - 90 1.8		X	97-01	6X0598477	**KMR27202**	SI ABS
57 1.7 SDI - 90 1.8	X		97-01	191498625A	**KCR27002**	
60 1.4 - 75 1.6		X	95-01	6X0598477	**KMR27202**	SI ABS
60 1.4 - 75 1.6	X		95-01	191498625A	**KCR27002**	
64 1.9 SDI		X	95-99	6X0598477	**KMR27202**	SI ABS
64 1.9 SDI	X		95-99	191498625A	**KCR27002**	
68 1.9 SDI		X	99-02	6X0598477	**KMR27202**	SI ABS
68 1.9 SDI	X		99-02	191498625A	**KCR27002**	
75 1.4 16V		X	99-01	6X0598477	**KMR27202**	SI ABS
75 1.4 16V	X		99-01	191498625A	**KCR27002**	
90 1.9 TDI		X	96-01	6X0598477	**KMR27202**	SI ABS
90 1.9 TDI	X		96-01	191498625A	**KCR27002**	
POLO Coupé						
1.0		X	82-92	191598625	**KCR529**	
1.0 Cat		X	85-92	191598625	**KCR529**	
1.1		X	81-83	191598625	**KCR529**	
1.3		X	81-89	191598625	**KCR529**	
1.3		X	91-94	191598625	**KCR529**	
1.3 Cat - 1.3 G40		X	87-94	191598625	**KCR529**	
1.3 D		X	86-90	191598625	**KCR529**	
1.4 D		X	90-94	191598625	**KCR529**	
POLO III CLASSIC						
100 1.6 - 60 1.4 - 75 1.6		X	95-01	191598625	**KCR529**	
110 1.9 TDI		X	98-02	191598625	**KCR529**	
57 1.7 SDI - 90 1.8		X	97-01	191598625	**KCR529**	
64 1.9 SDI		X	95-99	191598625	**KCR529**	
68 1.9 SDI		X	99-02	191598625	**KCR529**	
90 1.9 TDI		X	96-01	191598625	**KCR529**	

follow VOLKSWAGEN

MODELLO MODEL	ASS.ANT. FRONT AXLE	ASS.POS. REAR AXLE	ANNO YEAR	RIF ORIGINALE ORIGINAL REF	RIF CORAM CORAM REF	NOTE NOTES
POLO Tre volumi						
1.4	X		02-dic	6C0407621	**KMR27102**	SI ABS
1.4		X	02-dic	6X0598477	**KMR27202**	SI ABS
POLO Van Cassone/Furgonato						
1.4		X	97-01	6X0598477	**KMR27202**	SI ABS
1.4	X		97-01	191498625A	**KCR27002**	
1.4		X	97-99	191598625	**KCR529**	
1.6	X		97-98	191498625A	**KCR27002**	
1.6		X	97-98	191598625	**KCR529**	
1.9 SDI		X	99-01	6X0598477	**KMR27202**	SI ABS
1.9 SDI	X		96	191498625A	**KCR27002**	
1.9 SDI	X		99-01	191498625A	**KCR27002**	
1.9 SDI		X	96	191598625	**KCR529**	
POLO Variant						
1.4 - 1.6 - 1.7 SDI - 1.8 - 1.9 SDI - 1.9 TDI		X	97-01	6X0598477	**KMR27202**	SI ABS
1.4 - 1.6 - 1.7 SDI - 1.8 - 1.9 SDI - 1.9 TDI	X		97-01	191498625A	**KCR27002**	
1.4 - 1.6 - 1.7 SDI - 1.8 - 1.9 SDI - 1.9 TDI		X	97-01	191598625	**KCR529**	
1.4 16V		X	99-01	6X0598477	**KMR27202**	SI ABS
1.4 16V	X		99-01	191498625A	**KCR27002**	
SANTANA						
1.3 - 1.9		X	81-83	191598625	**KCR529**	
1.6 - 1.6 D - 1.6 TD		X	81-84	191598625	**KCR529**	
1.6 - 2.0		X	83-84	191598625	**KCR529**	
SCIROCCO						
1.1		X	74-79	191598625	**KCR529**	
1.3		X	79-83	191598625	**KCR529**	
1.4 TSI - 2.0 TDI - 2.0 TSI	X		ago-17	1T0498621	**KMR27001**	SI ABS
1.5		X	74-83	191598625	**KCR529**	
1.6		X	75-90	191598625	**KCR529**	
1.8		X	82-92	191598625	**KCR529**	
1.8 16V		X	85-92	191598625	**KCR529**	
2.0 R	X		set-17	1T0498621	**KMR27001**	SI ABS

follow VOLKSWAGEN

MODELLO MODEL	ASS.ANT. FRONT AXLE	ASS.POS. REAR AXLE	ANNO YEAR	RIF ORIGINALE ORIGINAL REF	RIF CORAM CORAM REF	NOTE NOTES
SHARAN						
1.4 TSI - 2.0 TSI	X		10->	1T0498621	**KMR27001**	SI ABS
1.8 T 20		X	97-10	7M0407625	**KCR27201**	
1.9 TDI - 2.0		X	95-10	7M0407625	**KCR27201**	
2.0 LPG		X	06-ott	7M0407625	**KCR27201**	
2.0 TDI		X	05-ott	7M0407625	**KCR27201**	
2.0 TDI	X		ott-19	1T0498621	**KMR27001**	SI ABS
2.0 TDI 4motion	X		11->	1T0498621	**KMR27001**	SI ABS
2.8 V6 24V		X	00-10	7M0407625	**KCR27201**	
2.8 VR6		X	95-00	7M0407625	**KCR27201**	
TIGUAN						
1.4 TSI	X		ott-18	1T0498621	**KMR27001**	SI ABS
1.4 TSI 4motion - 2.0 TDI 4motion - 2.0 TFSI 4motion	X		lug-18	1T0498621	**KMR27001**	SI ABS
1.4 TSI 4motion - 2.0 TDI 4motion - 2.0 TSI 4motion	X		16->	1K0498621	**KMR27002**	SI ABS
2.0 TDI	X		ago-18	1T0498621	**KMR27001**	SI ABS
2.0 TSI 4motion	X		nov-18	1T0498621	**KMR27001**	SI ABS
TIGUAN ALLSPACE						
1.4 TSI - 1.4 TSI E100 Flex - 2.0 TDI - 2.0 TDI 4motion	X		17->	1K0498621	**KMR27002**	SI ABS
2.0 TSI - 2.0 TSI 4motion	X		17->	1K0498621	**KMR27002**	SI ABS
TOURAN						
1.2 TSI - 1.6 TDI	X		ott-15	1T0498621	**KMR27001**	SI ABS
1.4 FSI - 1.6 BiFuel	X		06-ott	1T0498621	**KMR27001**	SI ABS
1.4 TSI	X		giu-15	1T0498621	**KMR27001**	SI ABS
1.4 TSI EcoFuel	X		set-15	1T0498621	**KMR27001**	SI ABS
1.6 - 1.9 TDI - 2.0 TDI - 2.0 TDI 16V	X		03-ott	1T0498621	**KMR27001**	SI ABS
1.6 FSI - 2.0 FSI	X		03-lug	1T0498621	**KMR27001**	SI ABS
2.0 EcoFuel	X		06-set	1T0498621	**KMR27001**	SI ABS
2.0 TDI	X		mar-15	1T0498621	**KMR27001**	SI ABS
T-ROC						
1.0 TSI - 1.5 TSI		X	17->	8V0598611A	**KMR27003**	SI ABS
1.6 TDI - 2.0 TDI		X	18->	8V0598611A	**KMR27003**	SI ABS
2.0 TDI 4motion - 2.0 TSI 4motion	X		17->	1K0498621	**KMR27002**	SI ABS

follow VOLKSWAGEN

MODELLO MODEL	ASS.ANT. FRONT AXLE	ASS.POS. REAR AXLE	ANNO YEAR	RIF ORIGINALE ORIGINAL REF	RIF CORAM CORAM REF	NOTE NOTES
VENTO						
1.4 - 1.8 - 1.9 D - 1.9 TD - 2.0	X		91-98	191498625A	**KCR27002**	
1.4 - 1.8 - 1.9 D - 1.9 TD - 2.0		X	91-98	191598625	**KCR529**	
1.6	X		92-98	191498625A	**KCR27002**	
1.6 - 2.8 VR6		X	92-98	191598625	**KCR529**	
1.9 SDI	X		97-98	191498625A	**KCR27002**	
1.9 SDI		X	97-98	191598625	**KCR529**	
1.9 TDI	X		93-98	191498625A	**KCR27002**	
1.9 TDI		X	93-98	191598625	**KCR529**	

KIT RUOTA
WHEEL BEARINGS KIT
KITS ROULEMENTS ROUES
DIMENSIONI – MEASURES – MESURE

DIMENSIONI Ø INT. Ø EST. H	CORAM
15/23x42/52x13/15	KCR12013
17,4/29x39,9/50,3x13,8/14,2	KCR528
17,5/29x39.9/50,3x13,9/14,2	KCR529
17.46/26.99x39.88/50.29x14.64/14.73	KCR21201
19/31,8x45/59,1x15/16,7	KCR941
19/35x45.2/62x15.5/18	KCR13005
25x52x37	KCR10005
25x52x37	KCR10101
25x52x37	KCR10103
25x52x37	KCR21001
25x52x37	KCR21009
25x52x42	KCR10003
25x52x42	KCR20003
25x52x42	KCR24001
25x55x43	KCR19001
25x55x43	KCR21010
25x55x45	KCR21008
25x55x48	KCR21006
25x60x45	KCR10006
29x50,3x17,5	KCR1333
29x53x37	KCR13001
29x53x37	KCR13003
30/40x55/68x17/19.5	KCR10105
30x60x37	KCR12012
30x60x37	KCR21301
34x64x37	KCR11103
34x64x37	KCR20008
34x64x37	KCR21302
34x67x37	KCR20004
35x60x15.9	KCR11101
35x60x18,4	KCR687
35x62x40	KCR20002
35x65x35	KCR21002
35x66x33	KCR12005
35x66x33	KCR12008
35x66x37	KCR27001

DIMENSIONI Ø INT. Ø EST. H	CORAM
35x68x48	KCR21202
35x72x33	KCR10007
35x72x33	KCR12003
35x72x33	KCR12006
35x72x33	KCR20001
37x72x33	KCR10001
37x72x33	KCR10004
37x72x37	KCR12001
37x72x37	KCR12009
37x72x37	KCR21004
37x72x37	KCR21101
37x74x37	KCR12004
38x69x34	KCR26001
38x70x37	KCR14001
38x71x39	KCR14102
39.9/50.3x17.5/29x13.9/14.2	KCR21007
39x72x37	KCR13002
39x72x37	KCR13004
39x72x37	KCR13008
39x74x39	KCR13006
39x75x37	KCR27102
40x72x37	KCR27002
40x73x55	KCR12801
40x74x40	KCR27101
40x74x42	KCR26003
40x75x37	KCR13009
40x75x38.9	KCR26002
41x68x17,5 / 45,2x77,8x19,8	KCR21203
42x75x37	KCR01002
42x75x37	KCR01003
42x75x60	KCR12011
42x76x39	KCR14101
42x77x39	KCR21003
42x80x39	KCR21102
42x82.5x37	KCR12010
42x82x36	KCR10002

DIMENSIONI Ø INT. Ø EST. H	CORAM
42x82x36	KCR10108
43.9x82.5x37.1	KCR25201
43x80x38	KCR27201
43x82x37	KCR27103
44x82,5x37	KCR10008
45.3x80x48	KCR20005
45x81x41	KCR01001
45x83x44	KCR10107
45x84x39	KCR19002
45x84x39	KCR19005
45x84x39	KCR24002
45x85x30.3	KCR13007
45x86x39	KCR20007
45x88x39	KCR21005
47/52x20/25x15.3/16.3	KCR11102
49x84x48	KCR10102
49x84x48	KCR20006
49x84x48	KCR20009
50x80x20	KCR12007
50x92x51	KCR19004
55x90x23	KCR10104
55x90x54	KCR12002
55x90x54	KCR21303
55x90x60	KCR10106
55x90x60	KCR12802
65/50x35/22x18.2/18.5	KCR19003

KIT RUOTA
WHEEL BEARING KITS
KITS ROULEMENTS ROUES
LISTA DI COMPARAZIONE – CROSS REFERENCES – REFERENCES CROISEES

CORAM	APPLICATION	O.E.	SKF	FAG	SNR	BREDA
KCR01001	BMW	33412406278	VKBA6632	713649420	R150.42	KRT2888
KCR01001	BMW	33416762321	VKBA6632	713649420	R150.42	KRT2888
KCR01001	BMW	33416762322	VKBA6632	713649420	R150.42	KRT2888
KCR01001	BMW	33416775842	VKBA6632	713649420	R150.42	KRT2888
KCR01002	BMW	33416762317	VKBA3682	713649390	R150.41	KRT2752
KCR01003	ALFA ROMEO	115204	VKBA1460	713649300	R150.24	KRT2508
KCR01003	ALFA ROMEO	11600.25401.08	VKBA1460	713649300	R150.24	KRT2508
KCR01003	BMW	33411130617	VKBA1460	713649300	R150.24	KRT2508
KCR01003	BMW	33412220987	VKBA1460	713649300	R150.24	KRT2508
KCR01003	SAAB	30520278	VKBA1460	713649300	R150.24	KRT2508
KCR01003	SAAB	8942765	VKBA1460	713649300	R150.24	KRT2508
KCR01003	SAAB	9104209	VKBA1460	713649300	R150.24	KRT2508
KCR10001	CITROEN	3350.72	VKBA3657	713640310	R166.03	KRT2332
KCR10001	CITROEN/PEUGEOT	3350.86	VKBA3657	713640310	R166.03	KRT2332
KCR10001	PEUGEOT	3350.92	VKBA3657	713640310	R166.03	KRT2332
KCR10002	CITROEN	3350.84	VKBA3584	713630760	R159.44	KRT2297
KCR10002	CITROEN/PEUGEOT	1606623580	VKBA3584	713630760	R159.44	KRT2297
KCR10002	CITROEN/PEUGEOT	3350.69	VKBA3584	713630760	R159.44	KRT2297
KCR10002	CITROEN/PEUGEOT	3350.97	VKBA3584	713630760	R159.44	KRT2297
KCR10002	OPEL	3557914	VKBA3584	713630760	R159.44	KRT2297
KCR10003	CITROEN/PEUGEOT	3748.A1	VKBA6726	713650610	R166.33	KRT8109
KCR10004	CITROEN/PEUGEOT	3350.32	VKBA3554	713650060	R159.17	KRT2165
KCR10005	CITROEN	3748.77	VKBA3658	713650070	R166.07	KRT2713
KCR10005	CITROEN/PEUGEOT	3730.21	VKBA3658	713650070	R166.07	KRT2713
KCR10005	CITROEN/PEUGEOT	95592226	VKBA3658	713650070	R166.07	KRT2713
KCR10005	CITROEN/PEUGEOT	95608940	VKBA3658	713650070	R166.07	KRT2713
KCR10005	NISSAN	43210-AX000	VKBA3658	713650070	R166.07	KRT2713
KCR10005	NISSAN	43210-AZ300	VKBA3658	713650070	R166.07	KRT2713
KCR10005	RENAULT	7703090253	VKBA3658	713650070	R166.07	KRT2713
KCR10005	RENAULT	7703090433	VKBA3658	713650070	R166.07	KRT2713
KCR10006	CITROEN/PEUGEOT	3748.83	VKBA3680	713640470	R159.48	KRT2750
KCR10007	CITROEN/PEUGEOT	3326.31	VKBA882	713650160	R159.14	KRT2184
KCR10007	CITROEN/PEUGEOT	3350.17	VKBA882	713650160	R159.14	KRT2184
KCR10007	CITROEN/PEUGEOT	95654076	VKBA882	713650160	R159.14	KRT2184
KCR10008	ALFA ROMEO/FIAT/LANCIA	71714473	VKBA3423	713630580	R159.31	KRT1576
KCR10008	ALFA ROMEO/FIAT/LANCIA	9567217680	VKBA3423	713630580	R159.31	KRT1576
KCR10008	CITROEN/PEUGEOT	3326.40	VKBA3423	713630580	R159.31	KRT1576
KCR10008	CITROEN/PEUGEOT	3350.27	VKBA3423	713630580	R159.31	KRT1576

KIT RUOTA
WHEEL BEARING KITS
KITS ROULEMENTS ROUES
LISTA DI COMPARAZIONE – CROSS REFERENCES – REFERENCES CROISEES

CORAM	APPLICATION	O.E.	SKF	FAG	SNR	BREDA
KCR10008	FIAT	1311506080	VKBA3423	713630580	R159.31	KRT1576
KCR10008	FIAT	1330512080	VKBA3423	713630580	R159.31	KRT1576
KCR10101	CITROEN/PEUGEOT	3730.21	VKBA3556	713650070	R159.38	KRT2686
KCR10101	CITROEN/PEUGEOT	3748.39	VKBA3556	713650070	R159.38	KRT2686
KCR10101	CITROEN/PEUGEOT	955922226	VKBA3556	713650070	R159.38	KRT2686
KCR10101	CITROEN/PEUGEOT	95608940	VKBA3556	713650070	R159.38	KRT2686
KCR10101	NISSAN	43210-AX000	VKBA3556	713650070	R159.38	KRT2686
KCR10101	NISSAN	43210-AZ300	VKBA3556	713650070	R159.38	KRT2686
KCR10101	RENAULT	7703090253	VKBA3556	713650070	R159.38	KRT2686
KCR10101	RENAULT	7703090433	VKBA3556	713650070	R159.38	KRT2686
KCR10102	CITROEN/PEUGEOT	1606375080	VKBA3640	713640390	R140.17	KRT2330
KCR10102	CITROEN/PEUGEOT	3326.62	VKBA3640	713640390	R140.17	KRT2330
KCR10102	FIAT	1328046080	VKBA3640	713640390	R140.17	KRT2330
KCR10102	FIAT	1347527080	VKBA3640	713640390	R140.17	KRT2330
KCR10102	FIAT	71753809	VKBA3640	713640390	R140.17	KRT2330
KCR10103	CITROEN/PEUGEOT	3748.17	VKBA961	713650290	R159.19	KRT2595
KCR10103	CITROEN/PEUGEOT	95654078	VKBA961	713650290	R159.19	KRT2595
KCR10103	CITROEN/PEUGEOT	95592226	VKBA961	713650290	R159.19	KRT2595
KCR10103	CITROEN/PEUGEOT	95608940	VKBA961	713650290	R159.19	KRT2595
KCR10103	DACIA	6001539074	VKBA961	713650290	R159.19	KRT2595
KCR10103	NISSAN	43210-AX000	VKBA961	713650290	R159.19	KRT2595
KCR10103	NISSAN	43210-AZ300	VKBA961	713650290	R159.19	KRT2595
KCR10103	PEUGEOT	3730.21	VKBA961	713650290	R159.19	KRT2595
KCR10103	RENAULT	7703090253	VKBA961	713650290	R159.19	KRT2595
KCR10103	RENAULT	7703090433	VKBA961	713650290	R159.19	KRT2595
KCR10104	CITROEN/PEUGEOT/FIAT	1300535080	VKBA3428	713650330	R140.94	KRT1584
KCR10104	CITROEN/PEUGEOT/FIAT	1300535080	VKBA3428	713650330	R140.94	KRT1584
KCR10104	CITROEN/PEUGEOT/FIAT	1300535080	VKBA3428	713650330	R140.94	KRT1584
KCR10104	CITROEN/PEUGEOT/FIAT	1300535080	VKBA3428	713650330	R140.94	KRT1584
KCR10105	CITROEN/PEUGEOT	3350.25	VKBA3429	713650420	R140.95	KRT1609
KCR10105	CITROEN/PEUGEOT	3730.20	VKBA3429	713650420	R140.95	KRT1609
KCR10105	CITROEN/PEUGEOT	3735.15	VKBA3429	713650420	R140.95	KRT1609
KCR10105	CITROEN/PEUGEOT	ZF04330648	VKBA3429	713650420	R140.95	KRT1609
KCR10105	CITROEN/PEUGEOT	ZF04470124	VKBA3429	713650420	R140.95	KRT1609
KCR10105	FIAT	4330648	VKBA3429	713650420	R140.95	KRT1609
KCR10105	FIAT	4470124	VKBA3429	713650420	R140.95	KRT1609
KCR10105	FIAT	46444775	VKBA3429	713650420	R140.95	KRT1609
KCR10105	FIAT	55202791	VKBA3429	713650420	R140.95	KRT1609

KIT RUOTA
WHEEL BEARING KITS
KITS ROULEMENTS ROUES
LISTA DI COMPARAZIONE – CROSS REFERENCES – REFERENCES CROISEES

CORAM	APPLICATION	O.E.	SKF	FAG	SNR	BREDA
KCR10105	FIAT	71714454	VKBA3429	713650420	R140.95	KRT1609
KCR10105	FIAT	7667784	VKBA3429	713650420	R140.95	KRT1609
KCR10105	FIAT	7693593	VKBA3429	713650420	R140.95	KRT1609
KCR10105	FIAT	7693594	VKBA3429	713650420	R140.95	KRT1609
KCR10105	VW	291407645	VKBA3429	713650420	R140.95	KRT1609
KCR10106	CITROEN/PEUGEOT	1606375180	VKBA3641	713640400	R140.38	KRT2331
KCR10106	CITROEN/PEUGEOT	3326.63	VKBA3641	713640400	R140.38	KRT2331
KCR10106	FIAT	1328054080	VKBA3641	713640400	R140.38	KRT2331
KCR10107	CITROEN	1607704180	VKBA3683	713640500	R159.47	KRT2753
KCR10107	CITROEN/PEUGEOT	3350.82	VKBA3683	713640500	R159.47	KRT2753
KCR10107	PEUGEOT	1623942280	VKBA3683	713640500	R159.47	KRT2753
KCR10107	PEUGEOT	3350.85	VKBA3683	713640500	R159.47	KRT2753
KCR10107	PEUGEOT	3350.98	VKBA3683	713640500	R159.47	KRT2753
KCR10108	CITROEN	95496252	VKBA915	713640180	R166.13	KRT2129
KCR10108	CITROEN/PEUGEOT	3307.56	VKBA915	713640180	R166.13	KRT2129
KCR10108	CITROEN/PEUGEOT	3326.35	VKBA915	713640180	R166.13	KRT2129
KCR10108	CITROEN/PEUGEOT	3350.16	VKBA915	713640180	R166.13	KRT2129
KCR10108	CITROEN/PEUGEOT	95619160	VKBA915	713640180	R166.13	KRT2129
KCR10108	CITROEN/PEUGEOT	95590022	VKBA915	713640180	R166.13	KRT2129
KCR10108	CITROEN/PEUGEOT	96129301	VKBA915	713640180	R166.13	KRT2129
KCR11101	CHEVROLET/DAEWOO	96285525	VKBA3901	713625140	R184.53	KRT2179
KCR11101	DAEWOO	96316760	VKBA3901	713625140	R184.53	KRT2179
KCR11101	MERCEDES-BENZ	19803002	VKBA3901	713625140	R184.53	KRT2179
KCR11101	MERCEDES-BENZ	29801902	VKBA3901	713625140	R184.53	KRT2179
KCR11101	ROVER	CAC4999	VKBA3901	713625140	R184.53	KRT2179
KCR11101	SAAB	8934655	VKBA3901	713625140	R184.53	KRT2179
KCR11101	TOYOTA	90368-34083	VKBA3901	713625140	R184.53	KRT2179
KCR11101	VAUXHALL/GENERAL MOTORS	9966510	VKBA3901	713625140	R184.53	KRT2179
KCR11101	VOLVO	183578	VKBA3901	713625140	R184.53	KRT2179
KCR11101	VW	99905906100	VKBA3901	713625140	R184.53	KRT2179
KCR11102	CHEVROLET/DAEWOO	96316634	VKBA3796	713625120	R184.52	KRT2479
KCR11102	CHEVROLET/DAEWOO	96316635	VKBA3796	713625120	R184.52	KRT2479
KCR11102	DAIHATSU	90043-68006	VKBA3796	713625120	R184.52	KRT2479
KCR11102	FORD	4488728	VKBA3796	713625120	R184.52	KRT2479
KCR11102	FORD	XM34-1216-CA	VKBA3796	713625120	R184.52	KRT2479
KCR11102	MAZDA	9860-30-2060	VKBA3796	713625120	R184.52	KRT2479
KCR11102	MAZDA	S083-33-075	VKBA3796	713625120	R184.52	KRT2479
KCR11102	NISSAN	40210-18000	VKBA3796	713625120	R184.52	KRT2479

KIT RUOTA
WHEEL BEARING KITS
KITS ROULEMENTS ROUES
LISTA DI COMPARAZIONE – CROSS REFERENCES – REFERENCES CROISEES

CORAM	APPLICATION	O.E.	SKF	FAG	SNR	BREDA
KCR11102	SUBARU	906100004	VKBA3796	713625120	R184.52	KRT2479
KCR11102	SUBARU	906100005	VKBA3796	713625120	R184.52	KRT2479
KCR11103	CHEVROLET/DAEWOO	84536117	VKBA3786	713644660	R190.00	KRT2787
KCR11103	CHEVROLET/DAEWOO	94535249	VKBA3786	713644660	R190.00	KRT2787
KCR11103	DAEWOO	09267-34001	VKBA3786	713644660	R190.00	KRT2787
KCR11103	DAEWOO	90279331	VKBA3786	713644660	R190.00	KRT2787
KCR11103	DAEWOO	94535247	VKBA3786	713644660	R190.00	KRT2787
KCR11103	HOLDEN	8-94151-213-0	VKBA3786	713644660	R190.00	KRT2787
KCR11103	OPEL/VAUXHALL	328104	VKBA3786	713644660	R190.00	KRT2787
KCR11103	OPEL/VAUXHALL	9,02793E+15	VKBA3786	713644660	R190.00	KRT2787
KCR12001	ALFA ROMEO/FIAT/LANCIA	46519869	VKBA6540	713606400	153.35	KRT1577
KCR12001	ALFA ROMEO/FIAT/LANCIA	60815902	VKBA6540	713606400	153.35	KRT1577
KCR12001	ALFA ROMEO/FIAT/LANCIA	71714457	VKBA6540	713606400	153.35	KRT1577
KCR12001	ALFA ROMEO/FIAT/LANCIA/ABARTH	71745047	VKBA6540	713606400	153.35	KRT1577
KCR12001	ALFA ROMEO/FIAT/LANCIA/ABARTH	46773662	VKBA6540	713606400	153.35	KRT1577
KCR12001	ALFA ROMEO/LANCIA	55703171	VKBA6540	713606400	153.35	KRT1577
KCR12001	CITROEN	1618649280	VKBA6540	713606400	153.35	KRT1577
KCR12001	CITROEN/PEUGEOT	3326.77	VKBA6540	713606400	153.35	KRT1577
KCR12001	FIAT	46512970	VKBA6540	713606400	153.35	KRT1577
KCR12001	FIAT/LANCIA	71753061	VKBA6540	713606400	153.35	KRT1577
KCR12001	FORD	1587565	VKBA6540	713606400	153.35	KRT1577
KCR12001	LANCIA	51753791	VKBA6540	713606400	153.35	KRT1577
KCR12001	OPEL/VAUXHALL	1603338	VKBA6540	713606400	153.35	KRT1577
KCR12001	OPEL/VAUXHALL	93188890	VKBA6540	713606400	153.35	KRT1577
KCR12001	PEUGEOT	3326.75	VKBA6540	713606400	153.35	KRT1577
KCR12002	CITROEN/PEUGEOT	1606374680	VKBA6570	713640550	R141.45	KRT2774
KCR12002	CITROEN/PEUGEOT	3326.71	VKBA6570	713640550	R141.45	KRT2774
KCR12002	FIAT	51745702	VKBA6570	713640550	R141.45	KRT2774
KCR12003	ALFA ROMEO/FIAT/LANCIA	46527732	VKBA3538	713690750	R158.44	KRT2272
KCR12003	ALFA ROMEO/FIAT/LANCIA	46527733	VKBA3538	713690750	R158.44	KRT2272
KCR12003	ALFA ROMEO/FIAT/LANCIA	46773660	VKBA3538	713690750	R158.44	KRT2272
KCR12003	ALFA ROMEO/FIAT/LANCIA	55703170	VKBA3538	713690750	R158.44	KRT2272
KCR12003	ALFA ROMEO/FIAT/LANCIA	71745046	VKBA3538	713690750	R158.44	KRT2272
KCR12003	CITROEN/PEUGEOT	3326.72	VKBA3538	713690750	R158.44	KRT2272
KCR12003	CITROEN/PEUGEOT	3326.76	VKBA3538	713690750	R158.44	KRT2272
KCR12003	FIAT	71714459	VKBA3538	713690750	R158.44	KRT2272
KCR12003	FIAT	71753062	VKBA3538	713690750	R158.44	KRT2272
KCR12004	FIAT	46836196	VKBA3598	713690800	R158.54	KRT2244

KIT RUOTA
WHEEL BEARING KITS
KITS ROULEMENTS ROUES
LISTA DI COMPARAZIONE – CROSS REFERENCES – REFERENCES CROISEES

CORAM	APPLICATION	O.E.	SKF	FAG	SNR	BREDA
KCR12004	FIAT	71753820	VKBA3598	713690800	R158.54	KRT2244
KCR12004	FIAT	92403013	VKBA3598	713690800	R158.54	KRT2244
KCR12004	OPEL/VAUXHALL	328011	VKBA3598	713690800	R158.54	KRT2244
KCR12004	OPEL/VAUXHALL	328023	VKBA3598	713690800	R158.54	KRT2244
KCR12004	OPEL/VAUXHALL	95511623	VKBA3598	713690800	R158.54	KRT2244
KCR12004	OPEL/VAUXHALL	955113921	VKBA3598	713690800	R158.54	KRT2244
KCR12005	FIAT	46531160	VKBA3577	713690860	R158.42	KRT2238
KCR12005	FIAT	51856892	VKBA3577	713690860	R158.42	KRT2238
KCR12005	FIAT	71714458	VKBA3577	713690860	R158.42	KRT2238
KCR12005	FORD	1587548	VKBA3577	713690860	R158.42	KRT2238
KCR12005	FORD	1541807	VKBA3577	713690860	R158.42	KRT2238
KCR12006	ALFAROMEO/FIAT/FORD/LANCIA	7555466	VKBA3414	713690500	R158.35	KRT1553
KCR12006	ALFAROMEO/FIAT/LANCIA	46528566	VKBA3414	713690500	R158.35	KRT1553
KCR12006	ALFAROMEO/FIAT/LANCIA	46773659	VKBA3414	713690500	R158.35	KRT1553
KCR12006	FIAT	46423871	VKBA3414	713690500	R158.35	KRT1553
KCR12006	FIAT	755466	VKBA3414	713690500	R158.35	KRT1553
KCR12006	FIAT	71714468	VKBA3414	713690500	R158.35	KRT1553
KCR12007	CITROEN/PEUGEOT	3326.27	VKBA1444	713650310	R140.77	KRT1586
KCR12007	CITROEN/PEUGEOT	3350.21	VKBA1444	713650310	R140.77	KRT1586
KCR12007	CITROEN/PEUGEOT	3350.29	VKBA1444	713650310	R140.77	KRT1586
KCR12007	FIAT	4330647	VKBA1444	713650310	R140.77	KRT1586
KCR12007	FIAT	71714450	VKBA1444	713650310	R140.77	KRT1586
KCR12007	HYUNDAI	52703-44500	VKBA1444	713650310	R140.77	KRT1586
KCR12007	HYUNDAI	52703-44520	VKBA1444	713650310	R140.77	KRT1586
KCR12007	HYUNDAI	52703-44530	VKBA1444	713650310	R140.77	KRT1586
KCR12007	VW	91517185	VKBA1444	713650310	R140.77	KRT1586
KCR12007	VW	091517185B	VKBA1444	713650310	R140.77	KRT1586
KCR12007	WARTBURG	9900011425	VKBA1444	713650310	R140.77	KRT1586
KCR12008	ALFA ROMEO/FIAT/LANCIA	46423870	VKBA1401	713690080	R158.25	KRT1565
KCR12008	ALFA ROMEO/FIAT/LANCIA	51753789	VKBA1401	713690080	R158.25	KRT1565
KCR12008	ALFA ROMEO/FIAT/LANCIA	5890991	VKBA1401	713690080	R158.25	KRT1565
KCR12008	ALFA ROMEO/FIAT/LANCIA	71714466	VKBA1401	713690080	R158.25	KRT1565
KCR12008	ALFA ROMEO/FIAT/LANCIA	7558570	VKBA1401	713690080	R158.25	KRT1565
KCR12009	ALFA ROMEO/FIAT	60815880	VKBA1439	713690510	R158.36	KRT1575
KCR12009	ALFA ROMEO/FIAT/LANCIA	46423869	VKBA1439	713690510	R158.36	KRT1575
KCR12009	ALFA ROMEO/FIAT/LANCIA	46474537	VKBA1439	713690510	R158.36	KRT1575
KCR12009	ALFA ROMEO/FIAT/LANCIA	46529970	VKBA1439	713690510	R158.36	KRT1575
KCR12009	ALFA ROMEO/FIAT/LANCIA	51754191	VKBA1439	713690510	R158.36	KRT1575

KIT RUOTA
WHEEL BEARING KITS
KITS ROULEMENTS ROUES
LISTA DI COMPARAZIONE – CROSS REFERENCES – REFERENCES CROISEES

CORAM	APPLICATION	O.E.	SKF	FAG	SNR	BREDA
KCR12009	ALFA ROMEO/FIAT/LANCIA	60811546	VKBA1439	713690510	R158.36	KRT1575
KCR12009	ALFA ROMEO/FIAT/LANCIA	60813089	VKBA1439	713690510	R158.36	KRT1575
KCR12009	ALFA ROMEO/FIAT/LANCIA	60814780	VKBA1439	713690510	R158.36	KRT1575
KCR12009	ALFA ROMEO/FIAT/LANCIA	82374669	VKBA1439	713690510	R158.36	KRT1575
KCR12009	ALFA ROMEO/FIAT/LANCIA	82390273	VKBA1439	713690510	R158.36	KRT1575
KCR12009	FIAT	5890987	VKBA1439	713690510	R158.36	KRT1575
KCR12009	FIAT	71714460	VKBA1439	713690510	R158.36	KRT1575
KCR12009	FIAT	82289841	VKBA1439	713690510	R158.36	KRT1575
KCR12009	FIAT	46773661	VKBA1439	713690510	R158.36	KRT1575
KCR12010	FIAT	46836200	VKBA3599	713690810	R158.58	KRT2252
KCR12010	FIAT	50700495	VKBA3599	713690810	R158.58	KRT2252
KCR12010	FIAT	71753821	VKBA3599	713690810	R158.58	KRT2252
KCR12010	OPEL/VAUXHALL	328012	VKBA3599	713690810	R158.58	KRT2252
KCR12010	OPEL/VAUXHALL	95511624	VKBA3599	713690810	R158.58	KRT2252
KCR12011	CITROEN/PEUGEOT	3730.32	VKBA3642	713640330	R140.37	KRT2709
KCR12011	FIAT	1328029080	VKBA3642	713640330	R140.37	KRT2709
KCR12011	FIAT	71753818	VKBA3642	713640330	R140.37	KRT2709
KCR12012	ALFA ROMEO/FIAT/LANCIA	5937306	VKBA559	713690160	R158.07	KRT1554
KCR12012	ALFA ROMEO/FIAT/LANCIA	5947834	VKBA559	713690160	R158.07	KRT1554
KCR12012	ALFA ROMEO/FIAT/LANCIA	71746393	VKBA559	713690160	R158.07	KRT1554
KCR12012	FIAT	5891194	VKBA559	713690160	R158.07	KRT1554
KCR12012	FIAT	71714455	VKBA559	713690160	R158.07	KRT1554
KCR12012	FIAT/LANCIA	6556601326	VKBA559	713690160	R158.07	KRT1554
KCR12012	LADA	2108-3104020	VKBA559	713690160	R158.07	KRT1554
KCR12012	LADA	2108-3104020-00	VKBA559	713690160	R158.07	KRT1554
KCR12012	SEAT	025140301A	VKBA559	713690160	R158.07	KRT1554
KCR12012	SEAT	3981590	VKBA559	713690160	R158.07	KRT1554
KCR12012	SEAT	HB140302.02	VKBA559	713690160	R158.07	KRT1554
KCR12013	FIAT	336658	VKBA927	713690110	R158.02	KRT1551
KCR12013	FIAT	46576155	VKBA927	713690110	R158.03	KRT1551
KCR12013	FIAT	60055388	VKBA927	713690110	R158.02	KRT1551
KCR12013	FIAT	8582739	VKBA927	713690110	R158.03	KRT1551
KCR12013	SEAT	BA158236.00	VKBA927	713690110	R158.02	KRT1551
KCR12013	SEAT	BA158237.00	VKBA927	713690110	R158.03	KRT1551
KCR12801	IVECO	42470840	VKBA3551	713690830	R140.13	KRT2264
KCR12801	IVECO	42470845	VKBA3551	713690830	R140.13	KRT2264
KCR12801	IVECO	504164177	VKBA3551	713690830	R140.13	KRT2264
KCR12801	IVECO	504288649	VKBA3551	713690830	R140.13	KRT2264

KIT RUOTA
WHEEL BEARING KITS
KITS ROULEMENTS ROUES
LISTA DI COMPARAZIONE – CROSS REFERENCES – REFERENCES CROISEES

CORAM	APPLICATION	O.E.	SKF	FAG	SNR	BREDA
KCR12801	IVECO	93824580	VKBA3551	713690830	R140.13	KRT2264
KCR12801	IVECO	99825736	VKBA3551	713690830	R140.13	KRT2264
KCR12802	IVECO	42558516	VKBA3552	713690840	R141.86	KRT2691
KCR12802	IVECO	46393024	VKBA3552	713690840	R141.86	KRT2691
KCR12802	IVECO	503644252	VKBA3552	713690840	R141.86	KRT2691
KCR12802	IVECO	7180066	VKBA3552	713690840	R141.86	KRT2691
KCR12802	IVECO	7187566	VKBA3552	713690840	R141.86	KRT2691
KCR12802	IVECO	7189750	VKBA3552	713690840	R141.86	KRT2691
KCR12802	NISSAN	43210LC42A	VKBA3552	713690840	R141.86	KRT2691
KCR12802	RENAULT TRUCKS	7485139097	VKBA3552	713690840	R141.86	KRT2691
KCR13001	FORD	1085565	VKBA3532	713678030	R152.56S	KRT8139
KCR13001	FORD	1135043	VKBA3532	713678030	R152.56S	KRT8139
KCR13001	FORD	1201568	VKBA3532	713678030	R152.56S	KRT8139
KCR13001	FORD	1212541	VKBA3532	713678030	R152.56S	KRT8139
KCR13001	FORD	1212546	VKBA3532	713678030	R152.56S	KRT8139
KCR13001	FORD	1212547	VKBA3532	713678030	R152.56S	KRT8139
KCR13001	FORD	1212548	VKBA3532	713678030	R152.56S	KRT8139
KCR13001	FORD	1335383	VKBA3532	713678030	R152.56S	KRT8139
KCR13001	FORD	2S61-1238-AF	VKBA3532	713678030	R152.56S	KRT8139
KCR13001	FORD	2S411A154BA	VKBA3532	713678030	R152.56S	KRT8139
KCR13001	FORD	2S61-1238-AG	VKBA3532	713678030	R152.56S	KRT8139
KCR13001	FORD	2S6J-1A049-AA	VKBA3532	713678030	R152.56S	KRT8139
KCR13001	MAZDA	D350-26-151B	VKBA3532	713678030	R152.56S	KRT8139
KCR13001	MAZDA	D350-26-151C	VKBA3532	713678030	R152.56S	KRT8139
KCR13002	FORD	1112547	VKBA3531	713678100	R152.55	KRT2274
KCR13002	FORD	1201569	VKBA3531	713678100	R152.55	KRT2274
KCR13002	FORD	1315620	VKBA3531	713678100	R152.55	KRT2274
KCR13002	FORD	1766722	VKBA3531	713678100	R152.55	KRT2274
KCR13002	FORD	1822804	VKBA3531	713678100	R152.55	KRT2274
KCR13002	FORD	1833586	VKBA3531	713678100	R152.55	KRT2274
KCR13002	FORD	2001717	VKBA3531	713678100	R152.55	KRT2274
KCR13002	FORD	2S61-1215-BC	VKBA3531	713678100	R152.55	KRT2274
KCR13002	FORD	2S61-1215-BD	VKBA3531	713678100	R152.55	KRT2274
KCR13002	FORD	2S6J-1K018-BA	VKBA3531	713678100	R152.55	KRT2274
KCR13002	FORD	ACP1-1215-A1A	VKBA3531	713678100	R152.55	KRT2274
KCR13002	FORD	B1BC-1104-A6A	VKBA3531	713678100	R152.55	KRT2274
KCR13002	FORD	B1BC-1104-A6B	VKBA3531	713678100	R152.55	KRT2274
KCR13002	MAZDA	D351-33-047-A	VKBA3531	713678100	R152.55	KRT2274

KIT RUOTA
WHEEL BEARING KITS
KITS ROULEMENTS ROUES
LISTA DI COMPARAZIONE – CROSS REFERENCES – REFERENCES CROISEES

CORAM	APPLICATION	O.E.	SKF	FAG	SNR	BREDA
KCR13002	MAZDA	D651-33-047A	VKBA3531	713678100	R152.55	KRT2274
KCR13002	MAZDA	D651-33-047B	VKBA3531	713678100	R152.55	KRT2274
KCR13003	FORD	1201568	VKBA6515	713678640	R152.56	KRT2698
KCR13003	FORD	1335383	VKBA6515	713678640	R152.56	KRT2698
KCR13003	FORD	2S611238AF	VKBA6515	713678640	R152.56	KRT2698
KCR13003	FORD	2S611238AG	VKBA6515	713678640	R152.56	KRT2698
KCR13003	FORD	2S6J1A049AA	VKBA6515	713678640	R152.56	KRT2698
KCR13003	MAZDA	D35026151B	VKBA6515	713678640	R152.56	KRT2698
KCR13003	MAZDA	D35016151C	VKBA6515	713678640	R152.56	KRT2698
KCR13004	FORD	2S6W-1215-AA	VKBA3530	713678620	R170.43	KRT2338
KCR13004	MAZDA	D350-33-047A	VKBA3530	713678620	R170.43	KRT2338
KCR13004	MAZDA	D350-33-047B	VKBA3530	713678620	R170.43	KRT2338
KCR13005	ALFA ROMEO	11900.21408.01	VKBA1465	713678500	R140.87	KRT2262
KCR13005	ALFA ROMEO	60523333	VKBA1465	713678500	R140.87	KRT2262
KCR13005	BMW	31212634103	VKBA1465	713678500	R140.87	KRT2262
KCR13005	FIAT	4096104	VKBA1465	713678500	R140.87	KRT2262
KCR13005	FORD	1053115	VKBA1465	713678500	R140.87	KRT2262
KCR13005	FORD	1583567	VKBA1465	713678500	R140.87	KRT2262
KCR13005	FORD	5025899	VKBA1465	713678500	R140.87	KRT2262
KCR13005	FORD	697791	VKBA1465	713678500	R140.87	KRT2262
KCR13005	FORD	6485024	VKBA1465	713678500	R140.87	KRT2262
KCR13005	FORD	6562504	VKBA1465	713678500	R140.87	KRT2262
KCR13005	FORD	92VB-1215-AA	VKBA1465	713678500	R140.87	KRT2262
KCR13005	GENERAL MOTORS	11055109	VKBA1465	713678500	R140.87	KRT2262
KCR13005	LADA	2101-3103025	VKBA1465	713678500	R140.87	KRT2262
KCR13005	MASSEY FERGUSON	895322M91	VKBA1465	713678500	R140.87	KRT2262
KCR13005	MERCEDES-BENZ	9815905	VKBA1465	713678500	R140.87	KRT2262
KCR13005	OPEL/VAUXHALL	11055109	VKBA1465	713678500	R140.87	KRT2262
KCR13005	OPEL/VAUXHALL	330012	VKBA1465	713678500	R140.87	KRT2262
KCR13005	OPEL/VAUXHALL	7413409	VKBA1465	713678500	R140.87	KRT2262
KCR13005	RENAULT	7703090341	VKBA1465	713678500	R140.87	KRT2262
KCR13005	ROVER	GHB102	VKBA1465	713678500	R140.87	KRT2262
KCR13005	ROVER	RTC3398	VKBA1465	713678500	R140.87	KRT2262
KCR13005	SEAT	FA158244.00	VKBA1465	713678500	R140.87	KRT2262
KCR13005	TALBOT	16172400	VKBA1465	713678500	R140.87	KRT2262
KCR13005	TALBOT	9192000	VKBA1465	713678500	R140.87	KRT2262
KCR13005	VOLVO	181585+181584	VKBA1465	713678500	R140.87	KRT2262
KCR13005	VW	211405645D	VKBA1465	713678500	R140.87	KRT2262

KIT RUOTA
WHEEL BEARING KITS
KITS ROULEMENTS ROUES
LISTA DI COMPARAZIONE – CROSS REFERENCES – REFERENCES CROISEES

CORAM	APPLICATION	O.E.	SKF	FAG	SNR	BREDA
KCR13005	VW	99905906500	VKBA1465	713678500	R140.87	KRT2262
KCR13006	FORD	1484266	VKBA6520	713678870	R141.05	KRT2809
KCR13006	FORD	1484269	VKBA6520	713678870	R141.05	KRT2809
KCR13006	FORD	2T14-1215-BA	VKBA6520	713678870	R141.05	KRT2809
KCR13006	FORD	2T14-1K018-AA	VKBA6520	713678870	R141.05	KRT2809
KCR13006	FORD	2T14-1K018-AB	VKBA6520	713678870	R141.05	KRT2809
KCR13006	FORD	2T14-1K018-BA	VKBA6520	713678870	R141.05	KRT2809
KCR13006	FORD	2T14-1K018-BB	VKBA6520	713678870	R141.05	KRT2809
KCR13006	FORD	4410218	VKBA6520	713678870	R141.05	KRT2809
KCR13006	FORD	4410219	VKBA6520	713678870	R141.05	KRT2809
KCR13006	FORD	4366990	VKBA6520	713678870	R141.05	KRT2809
KCR13006	SAAB	4242202	VKBA6520	713678870	R141.05	KRT2809
KCR13006	SAAB	4689923	VKBA6520	713678870	R141.05	KRT2809
KCR13007	FORD	5025900	VKBA1466	713678600	R140.86	KRT2678
KCR13007	FORD	92VB-1225-BA	VKBA1466	713678600	R140.86	KRT2678
KCR13008	FORD	1582282	VKBA6653	713615730	R170.44	KRT8131
KCR13008	FORD	1315620	VKBA6653	713615730	R170.44	KRT8131
KCR13008	FORD	1699368	VKBA6653	713615730	R170.44	KRT8131
KCR13008	FORD	1746588	VKBA6653	713615730	R170.44	KRT8131
KCR13008	FORD	1766722	VKBA6653	713615730	R170.44	KRT8131
KCR13008	FORD	1822804	VKBA6653	713615730	R170.44	KRT8131
KCR13008	FORD	1833586	VKBA6653	713615730	R170.44	KRT8131
KCR13008	FORD	2001717	VKBA6653	713615730	R170.44	KRT8131
KCR13008	FORD	2356115	VKBA6653	713615730	R170.44	KRT8131
KCR13008	FORD	2S61-1215-BC	VKBA6653	713615730	R170.44	KRT8131
KCR13008	FORD	2S61-1215-BD	VKBA6653	713615730	R170.44	KRT8131
KCR13008	FORD	8V5J-1K018-AA	VKBA6653	713615730	R170.44	KRT8131
KCR13008	FORD	ACP1-1215-A1A	VKBA6653	713615730	R170.44	KRT8131
KCR13008	FORD	ACP1-1215-AFA	VKBA6653	713615730	R170.44	KRT8131
KCR13008	FORD	ACP1-1215-AFB	VKBA6653	713615730	R170.44	KRT8131
KCR13008	FORD	B1BC-1104-A6A	VKBA6653	713615730	R170.44	KRT8131
KCR13008	FORD	B1BC-1104-A6B	VKBA6653	713615730	R170.44	KRT8131
KCR13008	FORD	HCPC-1K018-AA	VKBA6653	713615730	R170.44	KRT8131
KCR13008	MAZDA	D351-33-047A	VKBA6653	713615730	R170.44	KRT8131
KCR13008	MAZDA	D351-33-047B	VKBA6653	713615730	R170.44	KRT8131
KCR13008	MAZDA	D651-33-047A	VKBA6653	713615730	R170.44	KRT8131
KCR13008	MAZDA	D651-33-047B	VKBA6653	713615730	R170.44	KRT8131
KCR13009	FORD	1133023	VKBA3575	713678410	R152.23	KRT2335

KIT RUOTA
WHEEL BEARING KITS
KITS ROULEMENTS ROUES
LISTA DI COMPARAZIONE – CROSS REFERENCES – REFERENCES CROISEES

CORAM	APPLICATION	O.E.	SKF	FAG	SNR	BREDA
KCR13009	FORD	4103363	VKBA3575	713678410	R152.23	KRT2335
KCR13009	FORD	4563516	VKBA3575	713678410	R152.23	KRT2335
KCR13009	JAGUAR	C2S8275	VKBA3575	713678410	R152.23	KRT2335
KCR1333	FORD	1019561	VKBA1333	713678320	R152.37	KRT2549
KCR1333	FORD	1137830	VKBA1333	713678320	R152.37	KRT2549
KCR1333	FORD	5020654	VKBA1333	713678320	R152.37	KRT2549
KCR1333	FORD	5020655	VKBA1333	713678320	R152.37	KRT2549
KCR1333	FORD	5030538	VKBA1333	713678320	R152.37	KRT2549
KCR1333	FORD	6170567	VKBA1333	713678320	R152.37	KRT2549
KCR1333	FORD	6189661	VKBA1333	713678320	R152.37	KRT2549
KCR1333	FORD	6199622	VKBA1333	713678320	R152.37	KRT2549
KCR1333	FORD	7220658	VKBA1333	713678320	R152.37	KRT2549
KCR1333	FORD	89FB-1238-AC	VKBA1333	713678320	R152.37	KRT2549
KCR1333	FORD	89FB-1238-AD	VKBA1333	713678320	R152.37	KRT2549
KCR1333	FORD	96FX-1A049-AB	VKBA1333	713678320	R152.37	KRT2549
KCR1333	MAZDA	1E00-32-61YA	VKBA1333	713678320	R152.37	KRT2549
KCR14001	HYUNDAI	51720-1C000	VKBA3907	713619510	R184.05	KRT7674
KCR14001	HYUNDAI	51720-25000	VKBA3907	713619510	R184.05	KRT7674
KCR14001	HYUNDAI	51720-25001	VKBA3907	713619510	R184.05	KRT7674
KCR14001	HYUNDAI	51720-29100	VKBA3907	713619510	R184.05	KRT7674
KCR14001	HYUNDAI	51720-29150	VKBA3907	713619510	R184.05	KRT7674
KCR14001	HYUNDAI	51720-29300	VKBA3907	713619510	R184.05	KRT7674
KCR14001	HYUNDAI	51720-29400	VKBA3907	713619510	R184.05	KRT7674
KCR14001	HYUNDAI/KIA	51720-02000	VKBA3907	713619510	R184.05	KRT7674
KCR14101	HYUNDAI	52710-26500	VKBA3935	713626090	R189.07	KRT7686
KCR14101	HYUNDAI/KIA	51720-2J001	VKBA3935	713626090	R189.07	KRT7686
KCR14101	HYUNDAI/KIA	52710-26530	VKBA3935	713626090	R189.07	KRT7686
KCR14101	HYUNDAI/KIA	52710-26510	VKBA3935	713626090	R189.07	KRT7686
KCR14101	HYUNDAI/KIA	52720-1F000	VKBA3935	713626090	R189.07	KRT7686
KCR14101	KIA	50310-3E101	VKBA3935	713626090	R189.07	KRT7686
KCR14101	KIA	50310-3E102	VKBA3935	713626090	R189.07	KRT7686
KCR14101	KIA	50310-3E200	VKBA3935	713626090	R189.07	KRT7686
KCR14101	KIA	50310-3E201	VKBA3935	713626090	R189.07	KRT7686
KCR14101	KIA	0K552-33-047	VKBA3935	713626090	R189.07	KRT7686
KCR14101	KIA	0K56B33047	VKBA3935	713626090	R189.07	KRT7686
KCR14101	KIA	51720FL047	VKBA3935	713626090	R189.07	KRT7686
KCR14102	TOYOTA	90080-36108	VKBA3929	713618660	R169.29	KRT7121
KCR14102	TOYOTA	90080-36178	VKBA3929	713618660	R169.29	KRT7121

KIT RUOTA
WHEEL BEARING KITS
KITS ROULEMENTS ROUES
LISTA DI COMPARAZIONE – CROSS REFERENCES – REFERENCES CROISEES

CORAM	APPLICATION	O.E.	SKF	FAG	SNR	BREDA
KCR14102	TOYOTA	90369-38022	VKBA3929	713618660	R169.29	KRT7121
KCR19001	MERCEDES-BENZ	1689810327	VKBA3521	713667320	R151.32	KRT2432
KCR19001	NISSAN	43210-00QAD	VKBA3521	713667320	R151.32	KRT2432
KCR19001	RENAULT	7703090365	VKBA3521	713667320	R151.32	KRT2432
KCR19002	MERCEDES-BENZ	1699810006	VKBA6509	713667960	R151.46	KRT2830
KCR19002	MERCEDES-BENZ	1699810127	VKBA6509	713667960	R151.46	KRT2830
KCR19003	MERCEDES-BENZ	29803002	VKBA6530	713667820	R151.36	KRT2827
KCR19003	MERCEDES-BENZ	29803102	VKBA6530	713667820	R151.36	KRT2827
KCR19003	MERCEDES-BENZ	2033300051	VKBA6530	713667820	R151.36	KRT2827
KCR19004	MERCEDES-BENZ	6399810427		713667980	R141.46	KRT2947
KCR19004	MERCEDES-BENZ	A6399810427		713667980	R141.46	KRT2947
KCR19005	MERCEDES-BENZ	2109810127	VKBA3486	713667050	R151.27	KRT2288
KCR19005	MERCEDES-BENZ	6389810027	VKBA3486	713667050	R151.27	KRT2288
KCR20001	FIAT	55703172	VKBA6550	713606390	R153.57	KRT2840
KCR20001	FIAT	71745046	VKBA6550	713606390	R153.57	KRT2840
KCR20001	OPEL	55703172	VKBA6550	713606390	R153.57	KRT2840
KCR20001	OPEL/VAUXHALL	1603337	VKBA6550	713606390	R153.57	KRT2840
KCR20001	OPEL/VAUXHALL	93188889	VKBA6550	713606390	R153.57	KRT2840
KCR20002	OPEL/VAUXHALL	4700322	VKBA3571	713644100	R153.35	KRT2296
KCR20002	OPEL/VAUXHALL	9203934	VKBA3571	713644100	R153.35	KRT2296
KCR20003	OPEL/VAUXHALL	4700323	VKBA3572	713644110	R153.36	KRT2440
KCR20003	OPEL/VAUXHALL	9203935	VKBA3572	713644110	R153.36	KRT2440
KCR20004	OPEL	93362342	VKBA3600	713644080	R153.39	KRT2289
KCR20004	OPEL/VAUXHALL	328980	VKBA3600	713644080	R153.39	KRT2289
KCR20004	OPEL/VAUXHALL	9195608	VKBA3600	713644080	R153.39	KRT2289
KCR20005	NISSAN	43210-00Q0K	VKBA3614	713630780	R140.01	KRT2723
KCR20005	NISSAN	43210-00QAB	VKBA3614	713630780	R140.01	KRT2723
KCR20005	OPEL/VAUXHALL	4403044	VKBA3614	713630780	R140.01	KRT2723
KCR20005	OPEL/VAUXHALL	9111044	VKBA3614	713630780	R140.01	KRT2723
KCR20005	RENAULT	7701206742	VKBA3614	713630780	R140.01	KRT2723
KCR20006	NISSAN	40210-00Q1F	VKBA3613	713630790	R140.06	KRT2341
KCR20006	NISSAN	40210-00QAC	VKBA3613	713630790	R140.06	KRT2341
KCR20006	OPEL/VAUXHALL	4403023	VKBA3613	713630790	R140.06	KRT2341
KCR20006	OPEL/VAUXHALL	9111023	VKBA3613	713630790	R140.06	KRT2341
KCR20006	RENAULT	7701206740	VKBA3613	713630790	R140.06	KRT2341
KCR20007	NISSAN	40210-00Q0F	VKBA3618	713644120	R155.69	KRT2343
KCR20007	NISSAN	40210-00QAE	VKBA3618	713644120	R155.69	KRT2343
KCR20007	OPEL/VAUXHALL	4408668	VKBA3618	713644120	R155.69	KRT2343

KIT RUOTA
WHEEL BEARING KITS
KITS ROULEMENTS ROUES
LISTA DI COMPARAZIONE – CROSS REFERENCES – REFERENCES CROISEES

CORAM	APPLICATION	O.E.	SKF	FAG	SNR	BREDA
KCR20007	RENAULT	402106566R	VKBA3618	713644120	R155.69	KRT2343
KCR20007	RENAULT	7701206847	VKBA3618	713644120	R155.69	KRT2343
KCR20008	CHEVROLET	95983139	VKBA3256	713644160	R153.14	KRT2173
KCR20008	CHEVROLET/DAEWOO	94535249	VKBA3256	713644160	R153.14	KRT2173
KCR20008	CHEVROLET/DAEWOO	94536117	VKBA3256	713644160	R153.14	KRT2173
KCR20008	DAEWOO	94535247	VKBA3256	713644160	R153.14	KRT2173
KCR20008	DAEWOO	0926-34001	VKBA3256	713644160	R153.14	KRT2173
KCR20008	DAEWOO/OPEL/VAUXHALL	90279331	VKBA3256	713644160	R153.14	KRT2173
KCR20008	HOLDEN	8-94151-213-0	VKBA3256	713644160	R153.14	KRT2173
KCR20008	LADA	2108-3103020	VKBA3256	713644160	R153.14	KRT2173
KCR20008	OPEL/VAUXHALL	1603192	VKBA3256	713644160	R153.14	KRT2173
KCR20008	OPEL/VAUXHALL	328104	VKBA3256	713644160	R153.14	KRT2173
KCR20008	OPEL/VAUXHALL	90486458	VKBA3256	713644160	R153.14	KRT2173
KCR20008	VW	171407625A	VKBA3256	713644160	R153.14	KRT2173
KCR20008	VW	171407625C	VKBA3256	713644160	R153.14	KRT2173
KCR20009	OPEL/VAUXHALL	4501154	VKBA3500	713630800	R140.06	KRT2301
KCR20009	OPEL/VAUXHALL	9161454	VKBA3500	713630800	R140.06	KRT2301
KCR20009	RENAULT	7701205416	VKBA3500	713630800	R140.06	KRT2301
KCR21001	CITROEN	95592226	VKBA3525	713630300	R155.63	KRT2665
KCR21001	CITROEN	95608940	VKBA3525	713630300	R155.63	KRT2665
KCR21001	CITROEN/PEUGEOT	3730.21	VKBA3525	713630300	R155.63	KRT2665
KCR21001	DACIA	6001548986	VKBA3525	713630300	R155.63	KRT2665
KCR21001	NISSAN	43210-AX000	VKBA3525	713630300	R155.63	KRT2665
KCR21001	NISSAN	43210-AZ300	VKBA3525	713630300	R155.63	KRT2665
KCR21001	RENAULT	432108237R	VKBA3525	713630300	R155.63	KRT2665
KCR21001	RENAULT	7701205812	VKBA3525	713630300	R155.63	KRT2665
KCR21001	RENAULT	7701208767	VKBA3525	713630300	R155.63	KRT2665
KCR21001	RENAULT	7701465735	VKBA3525	713630300	R155.63	KRT2665
KCR21001	RENAULT	7703090253	VKBA3525	713630300	R155.63	KRT2665
KCR21001	RENAULT	7703090433	VKBA3525	713630300	R155.63	KRT2665
KCR21002	DACIA	6001543344	VKBA3496	713630180	R155.32	KRT2196
KCR21002	MAN	81934200352	VKBA3496	713630180	R155.32	KRT2196
KCR21002	RENAULT	7701205778	VKBA3496	713630180	R155.32	KRT2196
KCR21002	RENAULT	7701465181	VKBA3496	713630180	R155.32	KRT2196
KCR21002	RENAULT	7703090251	VKBA3496	713630180	R155.32	KRT2196
KCR21002	RENAULT	7703090283	VKBA3496	713630180	R155.32	KRT2196
KCR21002	RENAULT	7703090404	VKBA3496	713630180	R155.32	KRT2196
KCR21003	RENAULT	7701207676	VKBA3638	713630850	R155.76	KRT2348

CORAM	APPLICATION	O.E.	SKF	FAG	SNR	BREDA
KCR21004	NISSAN	40210-00Q1D	VKBA3596	713630030	R155.16	KRT2350
KCR21004	NISSAN	40210-00QAA	VKBA3596	713630030	R155.16	KRT2350
KCR21004	RENAULT	402102977R	VKBA3596	713630030	R155.16	KRT2350
KCR21004	RENAULT	7701205779	VKBA3596	713630030	R155.16	KRT2350
KCR21004	RENAULT	7701464049	VKBA3596	713630030	R155.16	KRT2350
KCR21004	RENAULT/DACIA	6001547696	VKBA3596	713630030	R155.16	KRT2350
KCR21005	NISSAN	40210-00Q0E	VKBA3648	713644290	R155.74	KRT2349
KCR21005	NISSAN	40210-00QAG	VKBA3648	713644290	R155.74	KRT2349
KCR21005	NISSAN	40210-00QAK	VKBA3648	713644290	R155.74	KRT2349
KCR21005	OPEL	4451762	VKBA3648	713644290	R155.74	KRT2349
KCR21005	OPEL	93198742	VKBA3648	713644290	R155.74	KRT2349
KCR21005	OPEL/VAUXHALL	4412598	VKBA3648	713644290	R155.74	KRT2349
KCR21005	OPEL/VAUXHALL	4430305	VKBA3648	713644290	R155.74	KRT2349
KCR21005	OPEL/VAUXHALL	93161059	VKBA3648	713644290	R155.74	KRT2349
KCR21005	OPEL/VAUXHALL	93161376	VKBA3648	713644290	R155.74	KRT2349
KCR21005	RENAULT	402109697R	VKBA3648	713644290	R155.74	KRT2349
KCR21005	RENAULT	7701207358	VKBA3648	713644290	R155.74	KRT2349
KCR21005	RENAULT	7701207966	VKBA3648	713644290	R155.74	KRT2349
KCR21005	RENAULT	7701208427	VKBA3648	713644290	R155.74	KRT2349
KCR21006	RENAULT	7701208059	VKBA3676	713630970	R155.78	KRT2735
KCR21007	ALFA ROMEO	11600.21408.00	VKBA944	713644510	R153.07	KRT2172
KCR21007	ALFA ROMEO	11600.21413.03	VKBA944	713644510	R153.07	KRT2172
KCR21007	ALFA ROMEO	11600.21413.06	VKBA944	713644510	R153.07	KRT2172
KCR21007	ALFA ROMEO	510384	VKBA944	713644510	R153.07	KRT2172
KCR21007	ALFA ROMEO	510385	VKBA944	713644510	R153.07	KRT2172
KCR21007	ALFA ROMEO	60521282	VKBA944	713644510	R153.07	KRT2172
KCR21007	BMW	31211110115	VKBA944	713644510	R153.07	KRT2172
KCR21007	BMW	31212634104	VKBA944	713644510	R153.07	KRT2172
KCR21007	DAEWOO	2667886	VKBA944	713644510	R153.07	KRT2172
KCR21007	DAEWOO	94535209+94535210	VKBA944	713644510	R153.07	KRT2172
KCR21007	DAF	184447	VKBA944	713644510	R153.07	KRT2172
KCR21007	FORD	1492160	VKBA944	713644510	R153.07	KRT2172
KCR21007	FORD	1565444	VKBA944	713644510	R153.07	KRT2172
KCR21007	FORD	527972	VKBA944	713644510	R153.07	KRT2172
KCR21007	FORD	72GB-1215-AA	VKBA944	713644510	R153.07	KRT2172
KCR21007	FORD	72GB-1215-AA	VKBA944	713644510	R153.07	KRT2172
KCR21007	HYUNDAI	51730-11100	VKBA944	713644510	R153.07	KRT2172
KCR21007	HYUNDAI	51730-11101	VKBA944	713644510	R153.07	KRT2172

KIT RUOTA
WHEEL BEARING KITS
KITS ROULEMENTS ROUES
LISTA DI COMPARAZIONE – CROSS REFERENCES – REFERENCES CROISEES

CORAM	APPLICATION	O.E.	SKF	FAG	SNR	BREDA
KCR21007	ISUZU	9-00093-603-0	VKBA944	713644510	R153.07	KRT2172
KCR21007	ISUZU	9-00093-604-2	VKBA944	713644510	R153.07	KRT2172
KCR21007	KIA	KKY0133075	VKBA944	713644510	R153.07	KRT2172
KCR21007	KIA	MB00233075	VKBA944	713644510	R153.07	KRT2172
KCR21007	MAZDA	B002-33-075	VKBA944	713644510	R153.07	KRT2172
KCR21007	MERCEDES-BENZ	59817105	VKBA944	713644510	R153.07	KRT2172
KCR21007	MERCEDES-BENZ	69811605	VKBA944	713644510	R153.07	KRT2172
KCR21007	MITSUBISHI	MB001836	VKBA944	713644510	R153.07	KRT2172
KCR21007	OPEL/VAUXHALL	1603065	VKBA944	713644510	R153.07	KRT2172
KCR21007	OPEL/VAUXHALL	1603193	VKBA944	713644510	R153.07	KRT2172
KCR21007	OPEL/VAUXHALL	328022	VKBA944	713644510	R153.07	KRT2172
KCR21007	OPEL/VAUXHALL	330011	VKBA944	713644510	R153.07	KRT2172
KCR21007	OPEL/VAUXHALL	90005147	VKBA944	713644510	R153.07	KRT2172
KCR21007	OPEL/VAUXHALL	90486463	VKBA944	713644510	R153.07	KRT2172
KCR21007	OPEL/VAUXHALL/G. MOTORS	11054489	VKBA944	713644510	R153.07	KRT2172
KCR21007	OPEL/VAUXHALL/G. MOTORS	11070311	VKBA944	713644510	R153.07	KRT2172
KCR21007	ROVER	CAC4603	VKBA944	713644510	R153.07	KRT2172
KCR21007	ROVER	GHB107	VKBA944	713644510	R153.07	KRT2172
KCR21007	SKODA	969-300171	VKBA944	713644510	R153.07	KRT2172
KCR21007	SKODA	969-300291	VKBA944	713644510	R153.07	KRT2172
KCR21007	TALBOT	20339N	VKBA944	713644510	R153.07	KRT2172
KCR21007	TOYOTA	90366-17010	VKBA944	713644510	R153.07	KRT2172
KCR21007	TOYOTA	90368-17017	VKBA944	713644510	R153.07	KRT2172
KCR21007	VOLVO	184447	VKBA944	713644510	R153.07	KRT2172
KCR21007	VW	311405625E	VKBA944	713644510	R153.07	KRT2172
KCR21007	VW	311405645	VKBA944	713644510	R153.07	KRT2172
KCR21007	VW	6U0501319	VKBA944	713644510	R153.07	KRT2172
KCR21007	VW	969300171	VKBA944	713644510	R153.07	KRT2172
KCR21008	RENAULT	7701208058	VKBA3639	713630950	R155.77	KRT2734
KCR21008	RENAULT	7701209504	VKBA3639	713630950	R155.77	KRT2734
KCR21009	RENAULT	7701463523	VKBA969	713630250	R155.19	KRT2614
KCR21009	RENAULT	7703090313	VKBA969	713630250	R155.19	KRT2614
KCR21010	MERCEDES-BENZ	1689810327	VKBA976	713630270	R155.58	KRT2607
KCR21010	NISSAN	43210-00Q0L	VKBA976	713630270	R155.58	KRT2607
KCR21010	NISSAN	43210-00QAD	VKBA976	713630270	R155.58	KRT2607
KCR21010	RENAULT	7701205596	VKBA976	713630270	R155.58	KRT2607
KCR21010	RENAULT	7701463987	VKBA976	713630270	R155.58	KRT2607
KCR21010	RENAULT	7703090365	VKBA976	713630270	R155.58	KRT2607

KIT RUOTA
WHEEL BEARING KITS
KITS ROULEMENTS ROUES
LISTA DI COMPARAZIONE – CROSS REFERENCES – REFERENCES CROISEES

CORAM	APPLICATION	O.E.	SKF	FAG	SNR	BREDA
KCR21101	NISSAN	40210-1HA19	VKBA3637	713630840	R155.75	KRT2347
KCR21101	NISSAN	40210-1HA9D	VKBA3637	713630840	R155.75	KRT2347
KCR21101	NISSAN	40210-AX000	VKBA3637	713630840	R155.75	KRT2347
KCR21101	RENAULT	402101554R	VKBA3637	713630840	R155.75	KRT2347
KCR21101	RENAULT	402101HA1A	VKBA3637	713630840	R155.75	KRT2347
KCR21101	RENAULT	4021001HA9D	VKBA3637	713630840	R155.75	KRT2347
KCR21101	RENAULT	402104249R	VKBA3637	713630840	R155.75	KRT2347
KCR21101	RENAULT	402105733R	VKBA3637	713630840	R155.75	KRT2347
KCR21101	RENAULT/DACIA	6001550915	VKBA3637	713630840	R155.75	KRT2347
KCR21101	RENAULT/DACIA	7701207677	VKBA3637	713630840	R155.75	KRT2347
KCR21102	RENAULT	402107049R	VKBA6682	713631110	R155.87	KRT2872
KCR21102	RENAULT/DACIA	402108022R	VKBA6682	713631110	R155.87	KRT2872
KCR21201	DAEWOO	11055109	VKBA1310	713613280	R168.15	KRT7513
KCR21201	FORD	1492160	VKBA1310	713613280	R168.15	KRT7513
KCR21201	FORD	1565443	VKBA1310	713613280	R168.15	KRT7513
KCR21201	FORD	1583567	VKBA1310	713613280	R168.15	KRT7513
KCR21201	FORD	3026E-1200-A	VKBA1310	713613280	R168.15	KRT7513
KCR21201	FORD	81AB-1238-AA	VKBA1310	713613280	R168.15	KRT7513
KCR21201	HYUNDAI	51720-11100	VKBA1310	713613280	R168.15	KRT7513
KCR21201	HYUNDAI	51720-11101	VKBA1310	713613280	R168.15	KRT7513
KCR21201	HYUNDAI	52730-36200	VKBA1310	713613280	R168.15	KRT7513
KCR21201	ISUZU	8-94201-309-0	VKBA1310	713613280	R168.15	KRT7513
KCR21201	ISUZU	9-00093-605-0	VKBA1310	713613280	R168.15	KRT7513
KCR21201	ISUZU	9-00093-606-1	VKBA1310	713613280	R168.15	KRT7513
KCR21201	KIA	0031733075	VKBA1310	713613280	R168.15	KRT7513
KCR21201	KIA	52710FD000	VKBA1310	713613280	R168.15	KRT7513
KCR21201	KIA	KKY0133047	VKBA1310	713613280	R168.15	KRT7513
KCR21201	KIA	MB00233047	VKBA1310	713613280	R168.15	KRT7513
KCR21201	MAZDA	B002-33-047	VKBA1310	713613280	R168.15	KRT7513
KCR21201	MAZDA	B092-26-075	VKBA1310	713613280	R168.15	KRT7513
KCR21201	MITSUBISHI	MB001835	VKBA1310	713613280	R168.15	KRT7513
KCR21201	MITSUBISHI	MB002073	VKBA1310	713613280	R168.15	KRT7513
KCR21201	NISSAN	40210-21000	VKBA1310	713613280	R168.15	KRT7513
KCR21201	NISSAN	40215-A0100	VKBA1310	713613280	R168.15	KRT7513
KCR21201	NISSAN	40215-Y9500	VKBA1310	713613280	R168.15	KRT7513
KCR21201	TOYOTA	90368-19037	VKBA1310	713613280	R168.15	KRT7513
KCR21201	TOYOTA	90368-26027	VKBA1310	713613280	R168.15	KRT7513
KCR21201	VW	211405645C	VKBA1310	713613280	R168.15	KRT7513

KIT RUOTA
WHEEL BEARING KITS
KITS ROULEMENTS ROUES
LISTA DI COMPARAZIONE – CROSS REFERENCES – REFERENCES CROISEES

CORAM	APPLICATION	O.E.	SKF	FAG	SNR	BREDA
KCR21202	NISSAN	43210-00Q0M	VKBA3617	713644140	R155.70	KRT2724
KCR21202	NISSAN	43210-00QAC	VKBA3617	713644140	R155.70	KRT2724
KCR21202	OPEL/VAUXHALL	4408277	VKBA3617	713644140	R155.70	KRT2724
KCR21202	OPEL/VAUXHALL	91159917	VKBA3617	713644140	R155.70	KRT2724
KCR21202	RENAULT	7701206849	VKBA3617	713644140	R155.70	KRT2724
KCR21203	FORD	1954435	VKBA3205	713613750	R168.59	KRT7711
KCR21203	FORD	1954437	VKBA3205	713613750	R168.59	KRT7711
KCR21203	NISSAN	40210-0F000	VKBA3205	713613750	R168.59	KRT7711
KCR21203	NISSAN	40210-2S600	VKBA3205	713613750	R168.59	KRT7711
KCR21203	NISSAN	40210-50W00	VKBA3205	713613750	R168.59	KRT7711
KCR21203	NISSAN	40215-0F000	VKBA3205	713613750	R168.59	KRT7711
KCR21203	NISSAN	40215-2S600	VKBA3205	713613750	R168.59	KRT7711
KCR21203	NISSAN	40215-50W00	VKBA3205	713613750	R168.59	KRT7711
KCR21301	ALFA ROMEO/FIAT/LANCIA	5937306	VKBA1307	713691100	R172.04	KRT2552
KCR21301	ALFA ROMEO/FIAT/LANCIA	5947834	VKBA1307	713691100	R172.04	KRT2552
KCR21301	ALFA ROMEO/FIAT/LANCIA	71746393	VKBA1307	713691100	R172.04	KRT2552
KCR21301	FIAT/LANCIA	6556601326	VKBA1307	713691100	R172.04	KRT2552
KCR21301	LADA	2108-3104020	VKBA1307	713691100	R172.04	KRT2552
KCR21301	LADA	2108-3104020-00	VKBA1307	713691100	R172.04	KRT2552
KCR21301	SEAT	HB140302.02	VKBA1307	713691100	R172.04	KRT2552
KCR21302	LADA	2108-3103020	VKBA1306	713691010	R172.03	KRT2157
KCR21302	VW	171407625A	VKBA1306	713691010	R172.03	KRT2157
KCR21302	VW	171407625C	VKBA1306	713691010	R172.03	KRT2157
KCR21303	CITROEN/PEUGEOT	1606374680	VKBA6721	713645040	R141.29	KRT8133
KCR21303	CITROEN/PEUGEOT	3326.71	VKBA6721	713645040	R141.29	KRT8133
KCR21303	FIAT	51745702	VKBA6721	713645040	R141.29	KRT8133
KCR21303	NISSAN	40210-00Q0H	VKBA6721	713645040	R141.29	KRT8133
KCR21303	OPEL/VAUXHALL	4419183	VKBA6721	713645040	R141.29	KRT8133
KCR21303	OPEL/VAUXHALL	93197149	VKBA6721	713645040	R141.29	KRT8133
KCR21303	RENAULT	402103708R	VKBA6721	713645040	R141.29	KRT8133
KCR21303	RENAULT	402107435R	VKBA6721	713645040	R141.29	KRT8133
KCR24001	NISSAN	43210-4A00A	VKBA6820	713623480	R177.17	KRT7923
KCR24001	SUZUKI	46860-80G00	VKBA6820	713623480	R177.17	KRT7923
KCR24001	SUZUKI	46860M68K00	VKBA6820	713623480	R177.17	KRT7923
KCR24002	FIAT	71742699	VKBA6578	713623490	R177.21	KRT2805
KCR24002	SUZUKI	43440-79J00	VKBA6578	713623490	R177.21	KRT2805
KCR24002	SUZUKI	43440-80J00	VKBA6578	713623490	R177.21	KRT2805
KCR24002	SUZUKI	43440B77M00N	VKBA6578	713623490	R177.21	KRT2805

KIT RUOTA
WHEEL BEARING KITS
KITS ROULEMENTS ROUES
LISTA DI COMPARAZIONE – CROSS REFERENCES – REFERENCES CROISEES

CORAM	APPLICATION	O.E.	SKF	FAG	SNR	BREDA
KCR25201	ALFA ROMEO/FIAT/LANCIA	1326188080	VKBA3603	713620310	R161.26	KRT2304
KCR25201	ALFA ROMEO/FIAT/LANCIA	71731547	VKBA3603	713620310	R161.26	KRT2304
KCR25201	ALFA ROMEO/FIAT/LANCIA	71752156	VKBA3603	713620310	R161.26	KRT2304
KCR25201	LAND ROVER	LR041425	VKBA3603	713620310	R161.26	KRT2304
KCR25201	LAND ROVER	RFC000010	VKBA3603	713620310	R161.26	KRT2304
KCR25201	LAND ROVER/ROVER	GHK1692	VKBA3603	713620310	R161.26	KRT2304
KCR25201	LAND ROVER/ROVER	RUD100150	VKBA3603	713620310	R161.26	KRT2304
KCR26001	CITROEN/PEUGEOT	6822.JL	VKBA3684	713640490	R169.58	KRT2754
KCR26001	TOYOTA	90369-W0001	VKBA3684	713640490	R169.58	KRT2754
KCR26002	DAIHATSU/TOYOTA	90363-W005	VKBA6878	713618910	R169.75	KRT7730
KCR26002	TOYOTA	60401-00283	VKBA6878	713618910	R169.75	KRT7730
KCR26002	TOYOTA	90363-40079	VKBA6878	713618910	R169.75	KRT7730
KCR26002	TOYOTA	90363-T0023	VKBA6878	713618910	R169.75	KRT7730
KCR26002	TOYOTA	90363-W0006	VKBA6878	713618910	R169.75	KRT7730
KCR26003	TOYOTA	90080-36087	VKBA6831	713618770	R169.61	KRT7123
KCR26003	TOYOTA	90080-36136	VKBA6831	713618770	R169.61	KRT7123
KCR26003	TOYOTA	90080-36137	VKBA6831	713618770	R169.61	KRT7123
KCR26003	TOYOTA	90080-36149	VKBA6831	713618770	R169.61	KRT7123
KCR26003	TOYOTA	90080-36176	VKBA6831	713618770	R169.61	KRT7123
KCR26003	TOYOTA	900363-40066	VKBA6831	713618770	R169.61	KRT7123
KCR26003	TOYOTA	900363-T0015	VKBA6831	713618770	R169.61	KRT7123
KCR26003	TOYOTA	900363-T0018	VKBA6831	713618770	R169.61	KRT7123
KCR27001	AUDI/VW	191498625	VKBA906	713610310	R154.23	KRT2223
KCR27001	AUDI/VW/SEAT	6N0498625	VKBA906	713610310	R154.23	KRT2223
KCR27002	AUDI/SEAT/VW	357498625B	VKBA1358	713610100	R154.28	KRT2224
KCR27002	AUDI/VW	191498625A	VKBA1358	713610100	R154.28	KRT2224
KCR27002	AUDI/VW	331598625A	VKBA1358	713610100	R154.28	KRT2224
KCR27002	AUDI/VW	331598625B	VKBA1358	713610100	R154.28	KRT2224
KCR27002	AUDI/VW	357498625	VKBA1358	713610100	R154.28	KRT2224
KCR27002	VW	357407625A	VKBA1358	713610100	R154.28	KRT2224
KCR27002	VW	357407625E	VKBA1358	713610100	R154.28	KRT2224
KCR27002	VW	357498625C	VKBA1358	713610100	R154.28	KRT2224
KCR27101	AUDI	1J0498625A	VKBA3455	713610020	R157.22	KRT1595
KCR27101	AUDI/SEAT/SKODA/VW	1J0498625	VKBA3455	713610020	R157.22	KRT1595
KCR27101	AUDI/SEAT/SKODA/VW	1J0598625	VKBA3455	713610020	R157.22	KRT1595
KCR27101	KIA	0K20133047	VKBA3455	713610020	R157.22	KRT1595
KCR27101	MAZDA	B455-33-047C	VKBA3455	713610020	R157.22	KRT1595
KCR27101	MAZDA	B455-33-047D	VKBA3455	713610020	R157.22	KRT1595

KIT RUOTA
WHEEL BEARING KITS
KITS ROULEMENTS ROUES
LISTA DI COMPARAZIONE – CROSS REFERENCES – REFERENCES CROISEES

CORAM	APPLICATION	O.E.	SKF	FAG	SNR	BREDA
KCR27102	AUDI	8D0598625A	VKBA1355	713610080	R157.23	KRT2106
KCR27102	AUDI/SKODA/VW	4B0498625	VKBA1355	713610080	R157.23	KRT2106
KCR27102	AUDI/VW	893498625	VKBA1355	713610080	R157.23	KRT2106
KCR27102	AUDI/VW	893498625A	VKBA1355	713610080	R157.23	KRT2106
KCR27102	AUDI/VW	893498625B	VKBA1355	713610080	R157.23	KRT2106
KCR27102	AUDI/VW	893498625D	VKBA1355	713610080	R157.23	KRT2106
KCR27102	AUDI/VW	8D0498625	VKBA1355	713610080	R157.23	KRT2106
KCR27102	VW	89340625	VKBA1355	713610080	R157.23	KRT2106
KCR27102	VW	89340625C	VKBA1355	713610080	R157.23	KRT2106
KCR27102	VW	V893407625G	VKBA1355	713610080	R157.23	KRT2106
KCR27103	AUDI/SKODA/VW	4A0498625	VKBA1356	713610410	R157.14	KRT2105
KCR27103	AUDI/VW	1D0498625B	VKBA1356	713610410	R157.14	KRT2105
KCR27103	AUDI/VW	443498625A	VKBA1356	713610410	R157.14	KRT2105
KCR27103	AUDI/VW	443498625F	VKBA1356	713610410	R157.14	KRT2105
KCR27103	AUDI/VW	4B0498625A	VKBA1356	713610410	R157.14	KRT2105
KCR27103	AUDI/VW	4D0407625E	VKBA1356	713610410	R157.14	KRT2105
KCR27103	AUDI/VW	893498625C	VKBA1356	713610410	R157.14	KRT2105
KCR27103	AUDI/VW	893498625E	VKBA1356	713610410	R157.14	KRT2105
KCR27103	AUDI/VW	8D0498625B	VKBA1356	713610410	R157.14	KRT2105
KCR27103	VW	443407625F	VKBA1356	713610410	R157.14	KRT2105
KCR27103	VW	443407625H	VKBA1356	713610410	R157.14	KRT2105
KCR27103	VW	4A0407625A	VKBA1356	713610410	R157.14	KRT2105
KCR27201	FORD	1001719	VKBA3450	713610460	R154.42	KRT2699
KCR27201	FORD	1104362	VKBA3450	713610460	R154.42	KRT2699
KCR27201	FORD	1467387	VKBA3450	713610460	R154.42	KRT2699
KCR27201	FORD	1497388	VKBA3450	713610460	R154.42	KRT2699
KCR27201	FORD	1K040AA	VKBA3450	713610460	R154.42	KRT2699
KCR27201	FORD	6M21-1A049-AA	VKBA3450	713610460	R154.42	KRT2699
KCR27201	FORD	6M21-1A040-AA	VKBA3450	713610460	R154.42	KRT2699
KCR27201	FORD	7201008	VKBA3450	713610460	R154.42	KRT2699
KCR27201	FORD	95VW-1A049-AB	VKBA3450	713610460	R154.42	KRT2699
KCR27201	FORD	95VW-1K040-AA	VKBA3450	713610460	R154.42	KRT2699
KCR27201	VW	7M0407625	VKBA3450	713610460	R154.42	KRT2699
KCR27201	VW	7M3598625	VKBA3450	713610460	R154.42	KRT2699
KCR528	ALFA ROMEO	11600.21408.00	VKBA528	713678150	R152.17	KRT2136
KCR528	ALFA ROMEO	11600.21413.03	VKBA528	713678150	R152.17	KRT2136
KCR528	ALFA ROMEO	11600.21413.06	VKBA528	713678150	R152.17	KRT2136
KCR528	ALFA ROMEO	510384	VKBA528	713678150	R152.17	KRT2136

KIT RUOTA
WHEEL BEARING KITS
KITS ROULEMENTS ROUES
LISTA DI COMPARAZIONE – CROSS REFERENCES – REFERENCES CROISEES

CORAM	APPLICATION	O.E.	SKF	FAG	SNR	BREDA
KCR528	ALFA ROMEO	60521282	VKBA528	713678150	R152.17	KRT2136
KCR528	BMW	31211110115	VKBA528	713678150	R152.17	KRT2136
KCR528	BMW	31212634104	VKBA528	713678150	R152.17	KRT2136
KCR528	DAEWOO	2667886	VKBA528	713678150	R152.17	KRT2136
KCR528	DAEWOO	94535209+94535210	VKBA528	713678150	R152.17	KRT2136
KCR528	DAF	184447	VKBA528	713678150	R152.17	KRT2136
KCR528	FORD	1492160	VKBA528	713678150	R152.17	KRT2136
KCR528	FORD	1565444	VKBA528	713678150	R152.17	KRT2136
KCR528	FORD	5007028	VKBA528	713678150	R152.17	KRT2136
KCR528	FORD	527972	VKBA528	713678150	R152.17	KRT2136
KCR528	FORD	527972	VKBA528	713678150	R152.17	KRT2136
KCR528	FORD	72GB-1200-AA	VKBA528	713678150	R152.17	KRT2136
KCR528	FORD	72GB-1215-AA	VKBA528	713678150	R152.17	KRT2136
KCR528	GENERAL MOTORS	11054489	VKBA528	713678150	R152.17	KRT2136
KCR528	GENERAL MOTORS	11070311	VKBA528	713678150	R152.17	KRT2136
KCR528	HYUNDAI	51730-11100	VKBA528	713678150	R152.17	KRT2136
KCR528	HYUNDAI	51730-11101	VKBA528	713678150	R152.17	KRT2136
KCR528	ISUZU	8-94201-310-0	VKBA528	713678150	R152.17	KRT2136
KCR528	ISUZU	9-00093-603-0	VKBA528	713678150	R152.17	KRT2136
KCR528	ISUZU	9-00093-604-2	VKBA528	713678150	R152.17	KRT2136
KCR528	KIA	KKY0133075	VKBA528	713678150	R152.17	KRT2136
KCR528	KIA	MB00233075	VKBA528	713678150	R152.17	KRT2136
KCR528	MAZDA	B002-33-075	VKBA528	713678150	R152.17	KRT2136
KCR528	MERCEDES-BENZ	59817105	VKBA528	713678150	R152.17	KRT2136
KCR528	MERCEDES-BENZ	69811605	VKBA528	713678150	R152.17	KRT2136
KCR528	MITSUBISHI	MB001839	VKBA528	713678150	R152.17	KRT2136
KCR528	OPEL/VAUXHALL	11054489	VKBA528	713678150	R152.17	KRT2136
KCR528	OPEL/VAUXHALL	11070311	VKBA528	713678150	R152.17	KRT2136
KCR528	OPEL/VAUXHALL	328022	VKBA528	713678150	R152.17	KRT2136
KCR528	OPEL/VAUXHALL	330011	VKBA528	713678150	R152.17	KRT2136
KCR528	ROVER	CAC4603	VKBA528	713678150	R152.17	KRT2136
KCR528	ROVER	GHB107	VKBA528	713678150	R152.17	KRT2136
KCR528	SKODA	969-300291	VKBA528	713678150	R152.17	KRT2136
KCR528	SKODA/VW	969-300171	VKBA528	713678150	R152.17	KRT2136
KCR528	TALBOT	20339N	VKBA528	713678150	R152.17	KRT2136
KCR528	TOYOTA	90366-17010	VKBA528	713678150	R152.17	KRT2136
KCR528	TOYOTA	90368-17017	VKBA528	713678150	R152.17	KRT2136
KCR528	VOLVO	184447	VKBA528	713678150	R152.17	KRT2136

CORAM	APPLICATION	O.E.	SKF	FAG	SNR	BREDA
KCR528	VW	311405645	VKBA528	713678150	R152.17	KRT2136
KCR528	VW	311405645B	VKBA528	713678150	R152.17	KRT2136
KCR528	VW	6U0501319	VKBA528	713678150	R152.17	KRT2136
KCR529	ALFA ROMEO	11600.21408.00	VKBA529	713610230	R154.13	KRT2500
KCR529	ALFA ROMEO	11600.21413.03	VKBA529	713610230	R154.13	KRT2500
KCR529	ALFA ROMEO	11600.21413.06	VKBA529	713610230	R154.13	KRT2500
KCR529	ALFA ROMEO	510384	VKBA529	713610230	R154.13	KRT2500
KCR529	ALFA ROMEO	510385	VKBA529	713610230	R154.13	KRT2500
KCR529	ALFA ROMEO	60521282	VKBA529	713610230	R154.13	KRT2500
KCR529	AUDI/VW	191598625	VKBA529	713610230	R154.13	KRT2500
KCR529	AUDI/VW	311498071BS	VKBA529	713610230	R154.13	KRT2500
KCR529	AUDI/VW	6U0598625	VKBA529	713610230	R154.13	KRT2500
KCR529	BMW	31211110115	VKBA529	713610230	R154.13	KRT2500
KCR529	BMW	31212634104	VKBA529	713610230	R154.13	KRT2500
KCR529	DAEWOO	2667886	VKBA529	713610230	R154.13	KRT2500
KCR529	DAEWOO	94535209+94535210	VKBA529	713610230	R154.13	KRT2500
KCR529	DAF/VOLVO	184447	VKBA529	713610230	R154.13	KRT2500
KCR529	FORD	1492160	VKBA529	713610230	R154.13	KRT2500
KCR529	FORD	1565444	VKBA529	713610230	R154.13	KRT2500
KCR529	FORD	527972	VKBA529	713610230	R154.13	KRT2500
KCR529	FORD	72GB-1200-AA	VKBA529	713610230	R154.13	KRT2500
KCR529	FORD	72GB-1215-AA	VKBA529	713610230	R154.13	KRT2500
KCR529	HYUNDAI	51730-11100	VKBA529	713610230	R154.13	KRT2500
KCR529	HYUNDAI	51730-11101	VKBA529	713610230	R154.13	KRT2500
KCR529	ISUZU	8-94201-310-0	VKBA529	713610230	R154.13	KRT2500
KCR529	ISUZU	9-00093-603-0	VKBA529	713610230	R154.13	KRT2500
KCR529	ISUZU	9-00093-604-2	VKBA529	713610230	R154.13	KRT2500
KCR529	KIA	KKY0133075	VKBA529	713610230	R154.13	KRT2500
KCR529	KIA	MB00233075	VKBA529	713610230	R154.13	KRT2500
KCR529	MAZDA	B002-33-075	VKBA529	713610230	R154.13	KRT2500
KCR529	MERCEDES-BENZ	59817105	VKBA529	713610230	R154.13	KRT2500
KCR529	MERCEDES-BENZ	69811605	VKBA529	713610230	R154.13	KRT2500
KCR529	MITSUBISHI	MB001836	VKBA529	713610230	R154.13	KRT2500
KCR529	OPEL/VAUXHALL	328022	VKBA529	713610230	R154.13	KRT2500
KCR529	OPEL/VAUXHALL	330011	VKBA529	713610230	R154.13	KRT2500
KCR529	OPEL/VAUXHALL/G. MOTORS	11054489	VKBA529	713610230	R154.13	KRT2500
KCR529	OPEL/VAUXHALL/G. MOTORS	11070311	VKBA529	713610230	R154.13	KRT2500
KCR529	ROVER	CAC4603	VKBA529	713610230	R154.13	KRT2500

KIT RUOTA
WHEEL BEARING KITS
KITS ROULEMENTS ROUES
LISTA DI COMPARAZIONE – CROSS REFERENCES – REFERENCES CROISEES

CORAM	APPLICATION	O.E.	SKF	FAG	SNR	BREDA
KCR529	SKODA	969-300171	VKBA529	713610230	R154.13	KRT2500
KCR529	SKODA	969-300291	VKBA529	713610230	R154.13	KRT2500
KCR529	TALBOT	20339N	VKBA529	713610230	R154.13	KRT2500
KCR529	TOYOTA	90366-17010	VKBA529	713610230	R154.13	KRT2500
KCR529	TOYOTA	90368-17017	VKBA529	713610230	R154.13	KRT2500
KCR529	VW	311405625E	VKBA529	713610230	R154.13	KRT2500
KCR529	VW	311405645	VKBA529	713610230	R154.13	KRT2500
KCR529	VW	311405645B	VKBA529	713610230	R154.13	KRT2500
KCR529	VW	6U0501319	VKBA529	713610230	R154.13	KRT2500
KCR529	VW	966300171	VKBA529	713610230	R154.13	KRT2500
KCR687	FORD	1591389	VKBA687	713678090	R152.19	KRT2141
KCR687	FORD	5007040	VKBA687	713678090	R152.19	KRT2141
KCR687	FORD	81AB-1215-A	VKBA687	713678090	R152.19	KRT2141
KCR687	FORD	81AB-1215-AB	VKBA687	713678090	R152.19	KRT2141
KCR941	ALFA ROMEO	11900.21408.01	VKBA941	713667370	R151.14	KRT2164
KCR941	ALFA ROMEO	11900.21413.01	VKBA941	713667370	R151.14	KRT2164
KCR941	ALFA ROMEO	60523333	VKBA941	713667370	R151.14	KRT2164
KCR941	BMW	31212634103	VKBA941	713667370	R151.14	KRT2164
KCR941	BMW	31212634106	VKBA941	713667370	R151.14	KRT2164
KCR941	FIAT	4096101	VKBA941	713667370	R151.14	KRT2164
KCR941	FIAT	4096104	VKBA941	713667370	R151.14	KRT2164
KCR941	FORD	1583567	VKBA941	713667370	R151.14	KRT2164
KCR941	FORD	6077541	VKBA941	713667370	R151.14	KRT2164
KCR941	FORD	6485024	VKBA941	713667370	R151.14	KRT2164
KCR941	FORD	81AB-1238-AA	VKBA941	713667370	R151.14	KRT2164
KCR941	FORD	81AB-1238-BA	VKBA941	713667370	R151.14	KRT2164
KCR941	LADA	2101-3103025	VKBA941	713667370	R151.14	KRT2164
KCR941	MASSEY FERGUSON	893373M91	VKBA941	713667370	R151.14	KRT2164
KCR941	MASSEY FERGUSON	895322M91	VKBA941	713667370	R151.14	KRT2164
KCR941	MERCEDES-BENZ	9815805	VKBA941	713667370	R151.14	KRT2164
KCR941	MERCEDES-BENZ	9815905	VKBA941	713667370	R151.14	KRT2164
KCR941	MERCEDES-BENZ	2013300251	VKBA941	713667370	R151.14	KRT2164
KCR941	OPEL-VAUXHALL	328018	VKBA941	713667370	R151.14	KRT2164
KCR941	OPEL-VAUXHALL	330012	VKBA941	713667370	R151.14	KRT2164
KCR941	OPEL-VAUXHALL	7413406	VKBA941	713667370	R151.14	KRT2164
KCR941	OPEL-VAUXHALL	7413409	VKBA941	713667370	R151.14	KRT2164
KCR941	OPEL-VAUXHALL	8824111	VKBA941	713667370	R151.14	KRT2164
KCR941	OPEL-VAUXHALL-GEN.MOTORS	11055109	VKBA941	713667370	R151.14	KRT2164

KIT RUOTA
WHEEL BEARING KITS
KITS ROULEMENTS ROUES
LISTA DI COMPARAZIONE – CROSS REFERENCES – REFERENCES CROISEES

CORAM	APPLICATION	O.E.	SKF	FAG	SNR	BREDA
KCR941	ROVER	GHB102	VKBA941	713667370	R151.14	KRT2164
KCR941	ROVER	GHB105	VKBA941	713667370	R151.14	KRT2164
KCR941	ROVER	RTC3398	VKBA941	713667370	R151.14	KRT2164
KCR941	ROVER	RTC3808	VKBA941	713667370	R151.14	KRT2164
KCR941	SEAT	FA158244.00	VKBA941	713667370	R151.14	KRT2164
KCR941	SEAT	GE158236.00	VKBA941	713667370	R151.14	KRT2164
KCR941	SKODA	969-300590	VKBA941	713667370	R151.14	KRT2164
KCR941	TALBOT	16172300	VKBA941	713667370	R151.14	KRT2164
KCR941	TALBOT	16172400	VKBA941	713667370	R151.14	KRT2164
KCR941	TALBOT	9192000	VKBA941	713667370	R151.14	KRT2164
KCR941	VOLVO	181585+181584	VKBA941	713667370	R151.14	KRT2164
KCR941	VW	211405645C	VKBA941	713667370	R151.14	KRT2164
KCR941	VW	211405645D	VKBA941	713667370	R151.14	KRT2164
KCR941	VW	9000709340	VKBA941	713667370	R151.14	KRT2164
KCR941	VW	99905901800	VKBA941	713667370	R151.14	KRT2164
KCR941	VW	99905906500	VKBA941	713667370	R151.14	KRT2164
KMR01001	BMW	31221139345	VKBA3667	713667060	R150.35	KRT2322
KMR01001	BMW	31226757024	VKBA3667	713667060	R150.35	KRT2322
KMR01101	MINI	31222318454	VKBA3674	713649350	R162.50	KRT2340
KMR01101	MINI	31226756889	VKBA3674	713649350	R162.50	KRT2340
KMR10001	CITROEN/PEUGEOT	3748.85	VKBA3697	713618870	R169.59	KRT2908
KMR10001	TOYOTA	42450-0H010	VKBA3697	713618870	R169.59	KRT2908
KMR11001	CHEVROLET	13502873	VKBA7496	713645150	R181.30	KRT2979
KMR12001	ALFA ROMEO/FIAT	71769738	VKBA3540	713690710	R158.62	KRT2536
KMR12001	ALFA ROMEO/FIAT/LANCIA	60816007	VKBA3540	713690710	R158.62	KRT2536
KMR12001	ALFA ROMEO/FIAT/LANCIA	71714463	VKBA3540	713690710	R158.62	KRT2536
KMR12001	ALFA ROMEO/FIAT/LANCIA	71714471	VKBA3540	713690710	R158.62	KRT2536
KMR12001	ALFA ROMEO/FIAT/LANCIA	71377189	VKBA3540	713690710	R158.62	KRT2536
KMR12001	ALFA ROMEO/FIAT/LANCIA	71377614	VKBA3540	713690710	R158.62	KRT2536
KMR12001	ALFA ROMEO/FIAT/LANCIA	71769737	VKBA3540	713690710	R158.62	KRT2536
KMR12001	CITROEN	1619109880	VKBA3540	713690710	R158.62	KRT2536
KMR12001	CITROEN/PEUGEOT	1606635380	VKBA3540	713690710	R158.62	KRT2536
KMR12001	CITROEN/PEUGEOT	1606635580	VKBA3540	713690710	R158.62	KRT2536
KMR12001	CITROEN/PEUGEOT	3701.84	VKBA3540	713690710	R158.62	KRT2536
KMR12001	CITROEN/PEUGEOT	2748.98	VKBA3540	713690710	R158.62	KRT2536
KMR12001	FIAT	46512973	VKBA3540	713690710	R158.62	KRT2536
KMR12001	FIAT/ABARTH	46519901	VKBA3540	713690710	R158.62	KRT2536
KMR12001	FIAT/ABARTH	51754193	VKBA3540	713690710	R158.62	KRT2536

KIT RUOTA
WHEEL BEARING KITS
KITS ROULEMENTS ROUES
LISTA DI COMPARAZIONE – CROSS REFERENCES – REFERENCES CROISEES

CORAM	APPLICATION	O.E.	SKF	FAG	SNR	BREDA
KMR12001	FORD	1570756	VKBA3540	713690710	R158.62	KRT2536
KMR12001	FORD	1730689	VKBA3540	713690710	R158.62	KRT2536
KMR12001	FORD	9S51-1A034-AA	VKBA3540	713690710	R158.62	KRT2536
KMR12002	FIAT	51787397	VKBA6541	713606350	R158.59	KRT2914
KMR12002	FIAT	55701518	VKBA6541	713606350	R158.59	KRT2914
KMR12002	FIAT	71747713	VKBA6541	713606350	R158.59	KRT2914
KMR12003	ALFA ROME/FIAT/LANCIA	51759727	VKBA3583	713690730	R158.53	KRT2690
KMR12003	ALFA ROME/FIAT/LANCIA	51965295	VKBA3583	713690730	R158.53	KRT2690
KMR12003	ALFA ROMEO/FIAT	4655135	VKBA3583	713690730	R158.53	KRT2690
KMR12003	ALFA ROMEO/FIAT/LANCIA	46554134	VKBA3583	713690730	R158.53	KRT2690
KMR12003	FIAT	71753819	VKBA3583	713690730	R158.53	KRT2690
KMR12003	FIAT	71769492	VKBA3583	713690730	R158.53	KRT2690
KMR12004	ALFA ROMEO/FIAT/LANCIA	4399856	VKBA940	713690240	R158.10	KRT1614
KMR12004	ALFA ROMEO/FIAT/LANCIA	5948422	VKBA940	713690240	R158.10	KRT1614
KMR12004	ALFA ROMEO/FIAT/LANCIA	7599461	VKBA940	713690240	R158.10	KRT1614
KMR12004	ALFA ROMEO/FIAT/LANCIA	7603485	VKBA940	713690240	R158.10	KRT1614
KMR12004	SEAT	HB149002.01	VKBA940	713690240	R158.10	KRT1614
KMR12004	SEAT	RF149002.01	VKBA940	713690240	R158.10	KRT1614
KMR12005	ALFA ROMEO/FIAT/LANCIA	4400918	VKBA1443	713690360	R158.29	KRT2693
KMR12005	ALFA ROMEO/FIAT/LANCIA	5890994	VKBA1443	713690360	R158.29	KRT2693
KMR12005	ALFA ROMEO/FIAT/LANCIA	5963034	VKBA1443	713690360	R158.29	KRT2693
KMR12005	ALFA ROMEO/FIAT/LANCIA	71747857	VKBA1443	713690360	R158.29	KRT2693
KMR12006	FIAT	51748680	VKBA3620	713644090	R153.40	KRT2802
KMR12006	OPEL/VAUXHALL	1603143	VKBA3620	713644090	R153.40	KRT2802
KMR12006	OPEL/VAUXHALL	1603243	VKBA3620	713644090	R153.40	KRT2802
KMR12006	OPEL/VAUXHALL	1603294	VKBA3620	713644090	R153.40	KRT2802
KMR12006	OPEL/VAUXHALL	93171495	VKBA3620	713644090	R153.40	KRT2802
KMR12006	OPEL/VAUXHALL/SAAB	93175327	VKBA3620	713644090	R153.40	KRT2802
KMR12006	OPEL/VAUXHALL/SAAB	93186387	VKBA3620	713644090	R153.40	KRT2802
KMR12006	SAAB	12799815	VKBA3620	713644090	R153.40	KRT2802
KMR12007	CITROEN	1606374780	VKBA6571	713640570	R141.00	KRT2963
KMR12007	CITROEN	3701.82	VKBA6571	713640570	R141.00	KRT2963
KMR12007	FIAT	51754942	VKBA6571	713640570	R141.00	KRT2963
KMR12007	FIAT	71753811	VKBA6571	713640570	R141.00	KRT2963
KMR12009	ALFA ROMEO/FIAT	51754196	VKBA3597	713606330		KRT2701
KMR12009	FIAT	60656090	VKBA3597	713606330		KRT2701
KMR12101	FIAT	60652014	VKBA3503	713606040	R160.48	KRT2533
KMR12102	ALFA ROMEO/FIAT/LANCIA	46453887	VKBA1440	713690230	R158.22	KRT1617

KIT RUOTA
WHEEL BEARING KITS
KITS ROULEMENTS ROUES
LISTA DI COMPARAZIONE – CROSS REFERENCES – REFERENCES CROISEES

CORAM	APPLICATION	O.E.	SKF	FAG	SNR	BREDA
KMR12102	ALFA ROMEO/FIAT/LANCIA	60815883	VKBA1440	713690230	R158.22	KRT1617
KMR12102	ALFA ROMEO/FIAT/LANCIA	60812195	VKBA1440	713690230	R158.22	KRT1617
KMR12102	ALFA ROMEO/FIAT/LANCIA	71714477	VKBA1440	713690230	R158.22	KRT1617
KMR12102	ALFA ROMEO/FIAT/LANCIA	71737613	VKBA1440	713690230	R158.22	KRT1617
KMR12102	FIAT	71714476	VKBA1440	713690230	R158.22	KRT1617
KMR12102	FIAT	71737612	VKBA1440	713690230	R158.22	KRT1617
KMR12102	FIAT/LANCIA	60809985	VKBA1440	713690230	R158.22	KRT1617
KMR12103	ALFA ROMEO	50702890	VKBA6582	713606360	R160.33	KRT2784
KMR12103	ALFA ROMEO	50707555	VKBA6582	713606360	R160.33	KRT2784
KMR12103	ALFA ROMEO	71753815	VKBA6582	713606360	R160.33	KRT2784
KMR12104	ALFA ROMEO	51757885	VKBA3691	713606340	R160.51	KRT2761
KMR12105	ALFA ROMEO/FIAT/LANCIA	51813925	VKBA3502	713690760	R160.25	KRT1564
KMR12105	ALFA ROMEO/FIAT/LANCIA	60652011	VKBA3502	713690760	R160.25	KRT1564
KMR12105	ALFA ROMEO/FIAT/LANCIA	60671437	VKBA3502	713690760	R160.25	KRT1564
KMR12105	ALFA ROMEO/LANCIA	71714478	VKBA3502	713690760	R160.25	KRT1564
KMR12201	FIAT	5890994	VKBA734	713690010	R158.13	KRT1561
KMR12201	FIAT	71747857	VKBA734	713690010	R158.13	KRT1561
KMR12201	SEAT	028140301A	VKBA734	713690010	R158.13	KRT1561
KMR12201	SEAT	3981586	VKBA734	713690010	R158.13	KRT1561
KMR13001	FORD	1471852	VKBA3661	713678940	R152.92	KRT2922
KMR13001	FORD	1481197	VKBA3661	713678940	R152.92	KRT2922
KMR13001	FORD	1491957	VKBA3661	713678940	R152.92	KRT2922
KMR13001	FORD	1506577	VKBA3661	713678940	R152.92	KRT2922
KMR13001	FORD	1508112	VKBA3661	713678940	R152.92	KRT2922
KMR13001	FORD	1766628	VKBA3661	713678940	R152.92	KRT2922
KMR13001	FORD	3M51-2C299-RBC	VKBA3661	713678940	R152.92	KRT2922
KMR13001	FORD	7M51-2C299-AA	VKBA3661	713678940	R152.92	KRT2922
KMR13001	FORD	7M51-2C299-AB	VKBA3661	713678940	R152.92	KRT2922
KMR13001	FORD	7M51-2C299-AC	VKBA3661	713678940	R152.92	KRT2922
KMR13001	FORD	7M51-2C299-AD	VKBA3661	713678940	R152.92	KRT2922
KMR13001	FORD	7M51-2C299-AE	VKBA3661	713678940	R152.92	KRT2922
KMR13002	FORD	1516504	VKBA6654	713679080	R152.74	KRT2366
KMR13002	FORD	1534483	VKBA6654	713679080	R152.74	KRT2366
KMR13002	FORD	1547177	VKBA6654	713679080	R152.74	KRT2366
KMR13002	FORD	1675466	VKBA6654	713679080	R152.74	KRT2366
KMR13002	FORD	1699196	VKBA6654	713679080	R152.74	KRT2366
KMR13002	FORD	1778764	VKBA6654	713679080	R152.74	KRT2366
KMR13002	FORD	1896739	VKBA6654	713679080	R152.74	KRT2366

KIT RUOTA
WHEEL BEARING KITS
KITS ROULEMENTS ROUES
LISTA DI COMPARAZIONE – CROSS REFERENCES – REFERENCES CROISEES

CORAM	APPLICATION	O.E.	SKF	FAG	SNR	BREDA
KMR13002	FORD	2126980	VKBA6654	713679080	R152.74	KRT2366
KMR13002	FORD	8V51-2C299-AB	VKBA6654	713679080	R152.74	KRT2366
KMR13002	FORD	8V51-2C299-AC	VKBA6654	713679080	R152.74	KRT2366
KMR13002	FORD	8V51-2C299-AD	VKBA6654	713679080	R152.74	KRT2366
KMR13002	FORD	8V51-2C299-AE	VKBA6654	713679080	R152.74	KRT2366
KMR13002	FORD	8V51-2C299-AF	VKBA6654	713679080	R152.74	KRT2366
KMR13002	FORD	DCP1-1A049-AA	VKBA6654	713679080	R152.74	KRT2366
KMR13002	FORD	DCP1-2C299-A1B	VKBA6654	713679080	R152.74	KRT2366
KMR13002	FORD	DCP1-2C299-A1C	VKBA6654	713679080	R152.74	KRT2366
KMR13002	FORD	DCP1-2C299-B6A	VKBA6654	713679080	R152.74	KRT2366
KMR13003	FORD	1223640	VKBA3660	713678790	R152.62	KRT2339
KMR13003	FORD	1230907	VKBA3660	713678790	R152.62	KRT2339
KMR13003	FORD	1232245	VKBA3660	713678790	R152.62	KRT2339
KMR13003	FORD	1254308	VKBA3660	713678790	R152.62	KRT2339
KMR13003	FORD	1308716	VKBA3660	713678790	R152.62	KRT2339
KMR13003	FORD	1326487	VKBA3660	713678790	R152.62	KRT2339
KMR13003	FORD	1336139	VKBA3660	713678790	R152.62	KRT2339
KMR13003	FORD	1471854	VKBA3660	713678790	R152.62	KRT2339
KMR13003	FORD	3M51-2C300-CA	VKBA3660	713678790	R152.62	KRT2339
KMR13003	FORD	3M51-2C300-CB	VKBA3660	713678790	R152.62	KRT2339
KMR13003	FORD	3M51-2C300-CC	VKBA3660	713678790	R152.62	KRT2339
KMR13003	FORD	3M51-2C300-CD	VKBA3660	713678790	R152.62	KRT2339
KMR13003	FORD	3M51-2C300-CE	VKBA3660	713678790	R152.62	KRT2339
KMR13003	FORD	3M51-2C300-CF	VKBA3660	713678790	R152.62	KRT2339
KMR13003	FORD	3M51-2C300-CG	VKBA3660	713678790	R152.62	KRT2339
KMR13003	FORD	3M51-2C300-CH	VKBA3660	713678790	R152.62	KRT2339
KMR13004	FORD	1201300	VKBA3588	713678650	R152.60	KRT2336
KMR13004	FORD	1C1J-K018-AA	VKBA3588	713678650	R152.60	KRT2336
KMR13004	FORD	YC152B633AE	VKBA3588	713678650	R152.60	KRT2336
KMR13004	FORD	YC152B633AF	VKBA3588	713678650	R152.60	KRT2336
KMR19101	SMART	A4513300059	VKBA6626	713668060	R187.03	KRT2876
KMR19101	SMART	A4513300159	VKBA6626	713668060	R187.03	KRT2876
KMR20001	OPEL/VAUXHALL	1603254	VKBA3651	713644320	R153.48	KRT2345
KMR20001	OPEL/VAUXHALL	93178652	VKBA3651	713644320	R153.48	KRT2345
KMR20001	OPEL/VAUXHALL/GENERAL MOTORS	13110964	VKBA3651	713644320	R153.48	KRT2345
KMR20002	OPEL/VAUXHALL	1604002	VKBA3555	713644570	R153.27	KRT2438
KMR20002	OPEL/VAUXHALL	1604301	VKBA3555	713644570	R153.27	KRT2438
KMR20002	OPEL/VAUXHALL	90510543	VKBA3555	713644570	R153.27	KRT2438

KIT RUOTA
WHEEL BEARING KITS
KITS ROULEMENTS ROUES
LISTA DI COMPARAZIONE – CROSS REFERENCES – REFERENCES CROISEES

CORAM	APPLICATION	O.E.	SKF	FAG	SNR	BREDA
KMR20002	SAAB	4398046	VKBA3555	713644570	R153.27	KRT2438
KMR20002	SAAB	4778494	VKBA3555	713644570	R153.27	KRT2438
KMR20002	SAAB	4839122	VKBA3555	713644570	R153.27	KRT2438
KMR20002	SAAB	5058185	VKBA3555	713644570	R153.27	KRT2438
KMR20003	OPEL/GEN.MOTORS/VAUXHALL	13123486	VKBA3511	713644070	R153.32	KRT2293
KMR20003	OPEL/GEN.MOTORS/VAUXHALL	90538940	VKBA3511	713644070	R153.32	KRT2293
KMR20003	OPEL/VAUXHALL	1603209	VKBA3511	713644070	R153.32	KRT2293
KMR20003	OPEL/VAUXHALL	9117620	VKBA3511	713644070	R153.32	KRT2293
KMR20004	OPEL/GEN.MOTORS/VAUXHALL	90538941	VKBA3513	713644060	R1533.33	KRT2295
KMR20004	OPEL/VAUXHALL	13123488	VKBA3513	713644060	R1533.33	KRT2295
KMR20004	OPEL/VAUXHALL	1603211	VKBA3513	713644060	R1533.33	KRT2295
KMR20004	OPEL/VAUXHALL	9117622	VKBA3513	713644060	R1533.33	KRT2295
KMR20005	FIAT	51749115	VKBA3624	713644260	R153.41	KRT2725
KMR20005	OPEL/SAAB/VAUXHALL	24421906	VKBA3624	713644260	R153.41	KRT2725
KMR20005	OPEL/SAAB/VAUXHALL	93170611	VKBA3624	713644260	R153.41	KRT2725
KMR20005	OPEL/VAUXHALL	1604314	VKBA3624	713644260	R153.41	KRT2725
KMR20006	GEN. MOTORS/OPEL/VAUXHALL	24463066	VKBA3653	713644330	R153.49	KRT2727
KMR20006	OPEL/VAUXHALL	1604316	VKBA3653	713644330	R153.49	KRT2727
KMR20006	OPEL/VAUXHALL	93178626	VKBA3653	713644330	R153.49	KRT2727
KMR20007	OPEL	1603841	VKBA6688	713644810	R153.53	KRT2839
KMR20007	OPEL/VAUXHALL	93188477	VKBA6688	713644810	R153.53	KRT2839
KMR20008	CHEVROLET/OPEL/VAUXHALL	13580135	VKBA6667	713644940	R153.59	KRT8175
KMR20008	OPEL	13507374	VKBA6667	713644940	R153.59	KRT8175
KMR20008	OPEL/VAUXHALL	13502785	VKBA6667	713644940	R153.59	KRT8175
KMR20009	CHEVROLET/OPEL/VAUXHALL	13502829	VKBA6715	713644920	R153.67	KRT2859
KMR20009	CHEVROLET/OPEL/VAUXHALL	13583479	VKBA6715	713644920	R153.67	KRT2859
KMR20009	OPEL	328001	VKBA6715	713644920	R153.67	KRT2859
KMR20009	OPEL	328021	VKBA6715	713644920	R153.67	KRT2859
KMR21301	NISSAN	40202-1KA0A	VKBA6996	713613910	R168.73	KRT7709
KMR21301	NISSAN	40202-3PU0A	VKBA6996	713613910	R168.73	KRT7709
KMR21301	NISSAN	40202-BA60A	VKBA6996	713613910	R168.73	KRT7709
KMR21301	NISSAN	40202-JG000	VKBA6996	713613910	R168.73	KRT7709
KMR21301	NISSAN	40202-JG01A	VKBA6996	713613910	R168.73	KRT7709
KMR21301	NISSAN	40202-JG01B	VKBA6996	713613910	R168.73	KRT7709
KMR21301	RENAULT	402022560R	VKBA6996	713613910	R168.73	KRT7709
KMR21301	RENAULT	40202JY00A	VKBA6996	713613910	R168.73	KRT7709
KMR21302	NISSAN	43202-4BA0A	VKBA6997	713613920	R168.75	KRT7860
KMR21302	NISSAN	43202-4CE0A	VKBA6997	713613920	R168.75	KRT7860

KIT RUOTA
WHEEL BEARING KITS
KITS ROULEMENTS ROUES
LISTA DI COMPARAZIONE – CROSS REFERENCES – REFERENCES CROISEES

CORAM	APPLICATION	O.E.	SKF	FAG	SNR	BREDA
KMR21302	NISSAN	43202-JG01A	VKBA6997	713613920	R168.75	KRT7860
KMR21302	NISSAN	43202-JG01B	VKBA6997	713613920	R168.75	KRT7860
KMR21302	RENAULT	402022933R	VKBA6997	713613920	R168.75	KRT7860
KMR21302	RENAULT	43202JY00A	VKBA6997	713613920	R168.75	KRT7860
KMR26001	TOYOTA	42410-0D010	VKBA3930	713618670	R169.30	KRT7641
KMR26001	TOYOTA	42410-0D030	VKBA3930	713618670	R169.30	KRT7641
KMR26001	TOYOTA	42410-52020	VKBA3930	713618670	R169.30	KRT7641
KMR26001	TOYOTA	42410-52021	VKBA3930	713618670	R169.30	KRT7641
KMR26002	TOYOTA	42450-0D010	VKBA3931	713618680	R169.51	KRT7642
KMR26002	TOYOTA	42450-0D030	VKBA3931	713618680	R169.51	KRT7642
KMR26002	TOYOTA	42450-52020	VKBA3931	713618680	R169.51	KRT7642
KMR26002	TOYOTA	42450-52021	VKBA3931	713618680	R169.51	KRT7642
KMR26003	DAIHATSU/TOYOTA	42450-0D050	VKBA6828	713618990	R169.76	KRT7886
KMR26003	TOYOTA	42450-0D051	VKBA6828	713618990	R169.76	KRT7886
KMR26003	TOYOTA	42450-0D060	VKBA6828	713618990	R169.76	KRT7886
KMR26003	TOYOTA	42450-0D080	VKBA6828	713618990	R169.76	KRT7886
KMR26003	TOYOTA	42450-52060	VKBA6828	713618990	R169.76	KRT7886
KMR26003	TOYOTA	42450-52061	VKBA6828	713618990	R169.76	KRT7886
KMR26003	TOYOTA	42450-52070	VKBA6828	713618990	R169.76	KRT7886
KMR26003	TOYOTA	42450-74020	VKBA6828	713618990	R169.76	KRT7886
KMR27001	AUDI	8J0498625A	VKBA3643	713610610	R154.56	KRT2317
KMR27001	AUDI	8X0498625	VKBA3643	713610610	R154.56	KRT2317
KMR27001	AUDI/SEAT/SKODA/VW	1T0498621	VKBA3643	713610610	R154.56	KRT2317
KMR27001	AUDI/SEAT/SKODA/VW	3C0498621	VKBA3643	713610610	R154.56	KRT2317
KMR27001	AUDI/SEAT/SKODA/VW	8J0598625	VKBA3643	713610610	R154.56	KRT2317
KMR27001	AUDI/SEAT/VW	5K0498621	VKBA3643	713610610	R154.56	KRT2317
KMR27001	VW	L1KD407621	VKBA3643	713610610	R154.56	KRT2317
KMR27002	AUDI	8V0598625A	VKBA6556	713610990	R154.61	KRT2780
KMR27002	AUDI/SEAT	8V0498625B	VKBA6556	713610990	R154.61	KRT2780
KMR27002	AUDI/SEAT/SKODA/VW	8V0598625C	VKBA6556	713610990	R154.61	KRT2780
KMR27002	AUDI/SEAT/SKODA/VW	1K0498621	VKBA6556	713610990	R154.61	KRT2780
KMR27002	AUDI/SEAT/VW	5K0498621A	VKBA6556	713610990	R154.61	KRT2780
KMR27002	AUDI/SEAT/VW	8V0598625	VKBA6556	713610990	R154.61	KRT2780
KMR27002	AUDI/SEAY/SKODA/VW	8V0498625	VKBA6556	713610990	R154.61	KRT2780
KMR27002	AUDI/VW	8V0598625B	VKBA6556	713610990	R154.61	KRT2780
KMR27003	AUDI/SEAT/SKODA/VW	8V0598611A	VKBA3656	713610960	R154.55	KRT2705
KMR27003	AUDI/SEAT/VW	1K0598611	VKBA3656	713610960	R154.55	KRT2705
KMR27003	AUDI/SKODA/VW	8V0598611	VKBA3656	713610960	R154.55	KRT2705

KIT RUOTA
WHEEL BEARING KITS
KITS ROULEMENTS ROUES
LISTA DI COMPARAZIONE – CROSS REFERENCES – REFERENCES CROISEES

CORAM	APPLICATION	O.E.	SKF	FAG	SNR	BREDA
KMR27004	AUDI	4D0407625H	VKBA3536	713610430	R157.26	KRT1581
KMR27004	AUDI	8D0498625C	VKBA3536	713610430	R157.26	KRT1581
KMR27004	AUDI	8E0498625A	VKBA3536	713610430	R157.26	KRT1581
KMR27004	AUDI	8E0598625B	VKBA3536	713610430	R157.26	KRT1581
KMR27004	AUDI/SEAT	8E0498625B	VKBA3536	713610430	R157.26	KRT1581
KMR27005	AUDI	8E0598611	VKBA3606	713610700	R157.27	KRT2703
KMR27005	AUDI	8E0598611A	VKBA3606	713610700	R157.27	KRT2703
KMR27005	AUDI/SEAT	8E0598611B	VKBA3606	713610700	R157.27	KRT2703
KMR27005	AUDI/SEAT	8E0598611C	VKBA3606	713610700	R157.27	KRT2703
KMR27006	VW	7H0401611D	VKBA3646	713610650	R154.58	KRT2356
KMR27006	VW	7H0401611E	VKBA3646	713610650	R154.62	KRT2356
KMR27006	VW	7H0401611H	VKBA3646	713610650	R154.58	KRT2356
KMR27006	VW	7H0498611	VKBA3646	713610650	R154.62	KRT2356
KMR27006	VW	7L0498611	VKBA3646	713610650	R154.58	KRT2356
KMR27101	AUDI	4H0498625	VKBA6649	713610900	R157.43	KRT2779
KMR27101	AUDI	4H0498625A	VKBA6649	713610900	R157.43	KRT2779
KMR27101	AUDI	4H0498625B	VKBA6649	713610900	R157.43	KRT2779
KMR27101	AUDI	4H0498625D	VKBA6649	713610900	R157.43	KRT2779
KMR27101	AUDI	4H0498625E	VKBA6649	713610900	R157.43	KRT2779
KMR27101	AUDI	4H0498625F	VKBA6649	713610900	R157.43	KRT2779
KMR27101	AUDI	4S0598625	VKBA6649	713610900	R157.43	KRT2779
KMR27101	AUDI	8K0598625	VKBA6649	713610900	R157.43	KRT2779
KMR27102	AUDI/SEAT	6Q0407621AJ	VKBA3569	713610470	R157.32	KRT1587
KMR27102	AUDI/SEAT/SKODA/VW	6R0407621A	VKBA3569	713610470	R157.32	KRT1587
KMR27102	AUDI/SKODA	6Q0407621AH	VKBA3569	713610470	R157.32	KRT1587
KMR27102	SEAT	6Q0407621AD	VKBA3569	713610470	R157.32	KRT1587
KMR27102	SEAT/SKODA	6Q0407621BR	VKBA3569	713610470	R157.32	KRT1587
KMR27102	SEAT/SKODA/VW	6C0407621	VKBA3569	713610470	R157.32	KRT1587
KMR27102	SKODA/VW	6R0407621E	VKBA3569	713610470	R157.32	KRT1587
KMR27103	AUDI	8X0598611	VKBA3567	713610490	R157.31	KRT2558
KMR27103	AUDI/SEAT/SKODA/VW	6Q0598611	VKBA3567	713610490	R157.31	KRT2558
KMR27201	AUDI/SEAT/SKODA/VW	1J0598477	VKBA3456	713610220	R157.20	KRT2499
KMR27202	SEAT/VW	6X0598477	VKBA3548	713610320	R154.45	KRT2741
KMR27301	AUDI	8S0598611	VKBA3644	713610620	R154.54	KRT2704
KMR27301	AUDI/SEAT/SKODA/VW	1T0598611	VKBA3644	713610620	R154.54	KRT2704
KMR27301	AUDI/SEAT/SKODA/VW	1T0598611B	VKBA3644	713610620	R154.54	KRT2704
KMR27301	AUDI/SEAT/SKODA/VW	5QF598611	VKBA3644	713610620	R154.54	KRT2704
KMR27301	AUDI/SEAT/SKODA/VW	5WF501611A	VKBA3644	713610620	R154.54	KRT2704

KIT RUOTA
WHEEL BEARING KITS
KITS ROULEMENTS ROUES
LISTA DI COMPARAZIONE – CROSS REFERENCES – REFERENCES CROISEES

CORAM	APPLICATION	O.E.	SKF	FAG	SNR	BREDA
KMR27301	SKODA/VW	3G0598611A	VKBA3644	713610620	R154.54	KRT2704
KMR27301	VW	L1TD601611	VKBA3644	713610620	R154.54	KRT2704

ALFA ROME/FIAT/LANCIA	CORAM
51759727	KMR12003
51965295	KMR12003
ALFA ROMEO	**CORAM**
115204	KCR01003
11600.21408.00	KCR21007
11600.21408.00	KCR528
11600.21408.00	KCR529
11600.21413.03	KCR21007
11600.21413.03	KCR528
11600.21413.03	KCR529
11600.21413.06	KCR21007
11600.21413.06	KCR528
11600.21413.06	KCR529
11600.25401.08	KCR01003
11900.21408.01	KCR13005
11900.21408.01	KCR941
11900.21413.01	KCR941
50702890	KMR12103
50707555	KMR12103
510384	KCR21007
510384	KCR528
510384	KCR529
510385	KCR21007
510385	KCR528
510385	KCR529
51757885	KMR12104
60521282	KCR21007
60521282	KCR528
60521282	KCR529
60523333	KCR13005
60523333	KCR941
71753815	KMR12103
ALFA ROMEO/FIAT	**CORAM**
4655135	KMR12003
51754196	KMR12009
60815880	KCR12009

71769738	KMR12001
ALFA ROMEO/FIAT/LANCIA	**CORAM**
1326188080	KCR25201
4399856	KMR12004
4400918	KMR12005
46423869	KCR12009
46423870	KCR12008
46453887	KMR12102
46474537	KCR12009
46519869	KCR12001
46527732	KCR12003
46527733	KCR12003
46529970	KCR12009
46554134	KMR12003
46773660	KCR12003
51753789	KCR12008
51754191	KCR12009
51754192	KMR12102
51813925	KMR12105
55703170	KCR12003
5890991	KCR12008
5890994	KMR12005
5937306	KCR12012
5937306	KCR21301
5947834	KCR12012
5947834	KCR21301
5948422	KMR12004
5963034	KMR12005
60652011	KMR12105
60671437	KMR12105
60801380	KCR12009
60811546	KCR12009
60812195	KMR12102
60813089	KCR12009
60814780	KCR12009
60815883	KMR12102
60815902	KCR12001
60816007	KMR12001

71377189	KMR12001
71377614	KMR12001
71714457	KCR12001
71714463	KMR12001
71714466	KCR12008
71714471	KMR12001
71714473	KCR10008
71714477	KMR12102
71731547	KCR25201
71737613	KMR12102
71745046	KCR12003
71746393	KCR12012
71746393	KCR21301
71747857	KMR12005
71752156	KCR25201
71769737	KMR12001
7558570	KCR12008
7599461	KMR12004
7603485	KMR12004
82374669	KCR12009
82390273	KCR12009
9567217680	KCR10008
ALFA ROMEO/FIAT/LANCIA/ABARTH	**CORAM**
46773662	KCR12001
71745047	KCR12001
ALFA ROMEO/LANCIA	**CORAM**
55703171	KCR12001
71714478	KMR12105
ALFAROMEO/FIAT/FORD/LANCIA	**CORAM**
7555466	KCR12006
ALFAROMEO/FIAT/LANCIA	**CORAM**
46528566	KCR12006
46773659	KCR12006
AUDI	**CORAM**
1J0 498 625A	KCR27101

4D0407625D	KMR27004
4D0407625H	KMR27004
AUDI	**CORAM**
4H0498625	KMR27101
4H0498625A	KMR27101
4H0498625B	KMR27101
4H0498625D	KMR27101
4H0498625E	KMR27101
4H0498625F	KMR27101
4S0598625	KMR27101
AUDI	**CORAM**
8D0498625C	KMR27004
8D0598625 A	KCR27102
8E0498625A	KMR27004
8E0598611	KMR27005
8E0598611 A	KMR27005
8E0598625B	KMR27004
8J0498625A	KMR27001
AUDI	**CORAM**
8K0598625	KMR27101
AUDI	**CORAM**
8S0598611	KMR27301
8V0598625A	KMR27002
8X0498625	KMR27001
8X0598611	KMR27103
AUDI/SEAT	**CORAM**
6Q0407621AJ	KMR27102
8E0498625B	KMR27004
8E0598611 B	KMR27005
8E0598611 C	KMR27005
8V0498625B	KMR27002
AUDI/SEAT/SKODA/VW	**CORAM**
1J0 498 625	KCR27101
1J0 598 625	KCR27101

1J0598477	KMR27201
1K0498621	KMR27002
1T0498621	KMR27001
1T0598611	KMR27301
1T0598611B	KMR27301
3C0498621	KMR27001
5QF598611	KMR27301
5WF501611A	KMR27301
6Q0598611	KMR27103
6R0407621A	KMR27102
8J0598625	KMR27001
8V0598611A	KMR27003
8V0598625C	KMR27002
AUDI/SEAT/VW	**CORAM**
1K0598611	KMR27003
357498625 B	KCR27002
5K0498621	KMR27001
5K0498621A	KMR27002
8V0598625	KMR27002
AUDI/SEAY/SKODA/VW	**CORAM**
8V0498625	KMR27002
AUDI/SKODA	**CORAM**
6Q0407621AH	KMR27102
AUDI/SKODA/VW	**CORAM**
4A0498625	KCR27103
4B0498625	KCR27102
8V0598611	KMR27003
AUDI/VW	**CORAM**
191 598 625	KCR529
AUDI/VW	**CORAM**
191498625	KCR27001
AUDI/VW	**CORAM**
191498625 A	KCR27002
1D0498625B	KCR27103

311 498 071 BS	KCR529
331598625 A	KCR27002
331598625 B	KCR27002
357498625	KCR27002
443498625A	KCR27103
443498625F	KCR27103
4B0498625A	KCR27103
4D0407625E	KCR27103
6U0 598 625	KCR529
893498625	KCR27102
893498625 A	KCR27102
893498625 B	KCR27102
893498625 D	KCR27102
893498625C	KCR27103
893498625E	KCR27103
8D0498625	KCR27102
8D0498625B	KCR27103
8V0598625B	KMR27002
AUDI/VW/SEAT	**CORAM**
6N0498625	KCR27001
BMW	**CORAM**
31211110115	KCR21007
31211110115	KCR528
31211110115	KCR529
31212634103	KCR13005
31212634103	KCR941
31212634104	KCR21007
31212634104	KCR528
31212634104	KCR529
31212634106	KCR941
31221139345	KMR01001
31226757024	KMR01001
33411130617	KCR01003
33412220987	KCR01003
33412406278	KCR01001
33416762317	KCR01002
33416762321	KCR01001

33416762322	KCR01001
33416775842	KCR01001
CHEVROLET	**CORAM**
13502873	KMR11001
95983139	KCR20008
CHEVROLET/DAEWOO	**CORAM**
84536117	KCR11103
94535249	KCR11103
94535249	KCR20008
94536117	KCR20008
96285525	KCR11101
96316634	KCR11102
96316635	KCR11102
CHEVROLET/OPEL/VAUXHALL	**CORAM**
13502829	KMR20009
13580135	KMR20008
13583479	KMR20009
CITROEN	**CORAM**
1606374780	KMR12007
1607704180	KCR10107
1618649280	KCR12001
1619109880	KMR12001
3350.72	KCR10001
3350.84	KCR10002
3701.82	KMR12007
CITROEN	**CORAM**
3748.77	KCR10005
CITROEN	**CORAM**
95496252	KCR10108
95592226	KCR21001
95608940	KCR21001
CITROEN/PEUGEOT	**CORAM**
1606374680	KCR12002
1606374680	KCR21303

1606375080	KCR10102
1606375180	KCR10106
1606623580	KCR10002
1606635380	KMR12001
1606635580	KMR12001
2748.98	KMR12001
3307.56	KCR10108
3326.27	KCR12007
3326.31	KCR10007
3326.35	KCR10108
3326.40	KCR10008
3326.62	KCR10102
3326.63	KCR10106
3326.71	KCR12002
3326.71	KCR21303
3326.72	KCR12003
3326.76	KCR12003
3326.77	KCR12001
3350.16	KCR10108
3350.17	KCR10007
3350.21	KCR12007
3350.25	KCR10105
3350.27	KCR10008
3350.29	KCR12007
3350.32	KCR10004
3350.69	KCR10002
3350.82	KCR10107
3350.86	KCR10001
3350.91	KCR10008
3350.97	KCR10002
3701.84	KMR12001
3730.20	KCR10105
3730.21	KCR10005
3730.21	KCR10101
3730.21	KCR21001
3730.32	KCR12011
3735.15	KCR10105
3748.17	KCR10103

3748.39	KCR10101
3748.83	KCR10006
3748.85	KMR10001
3748.A1	KCR10003
6822.JL	KCR26001
95590022	KCR10108
955922226	KCR10101
95592226	KCR10005
95592226	KCR10103
95608940	KCR10005
95608940	KCR10101
95608940	KCR10103
95619160	KCR10108
95654076	KCR10007
95654078	KCR10103
96129301	KCR10108
ZF04330648	KCR10105
ZF04470124	KCR10105
CITROEN/PEUGEOT/FIAT	**CORAM**
1300535080	KCR10104
DACIA	**CORAM**
6001539074	KCR10103
6001543344	KCR21002
6001548986	KCR21001
DAEWOO	**CORAM**
0926-34001	KCR20008
09267-34001	KCR11103
11055109	KCR21201
2667886	KCR21007
2667886	KCR528
2667886	KCR529
90279331	KCR11103
94535209 + 94535210	KCR21007
94535209 + 94535210	KCR529
94535209+94535210	KCR528
94535247	KCR11103

94535247	KCR20008
96316760	KCR11101
DAEWOO/OPEL/VAUXHALL	**CORAM**
90279331	KCR20008
DAF	**CORAM**
184447	KCR21007
184447	KCR528
DAF/VOLVO	**CORAM**
184447	KCR529
DAIHATSU	**CORAM**
90043-68006	KCR11102
DAIHATSU/TOYOTA	**CORAM**
42450-0D050	KMR26003
90363-W005	KCR26002
FIAT	**CORAM**
1311506080	KCR10008
1328029080	KCR12011
1328046080	KCR10102
1328054080	KCR10106
1330512080	KCR10008
1347527080	KCR10102
336658	KCR12013
4096101	KCR941
4096104	KCR13005
4096104	KCR941
4330647	KCR12007
4330648	KCR10105
4470124	KCR10105
46423871	KCR12006
46444775	KCR10105
FIAT	**CORAM**
46512970	KCR12001

FIAT	**CORAM**
46512973	KMR12001
46531160	KCR12005
46576155	KCR12013
46773661	KCR12009
46836196	KCR12004
46836198	KCR12004
46836200	KCR12010
50700495	KCR12010
51745702	KCR12002
51745702	KCR21303
51748680	KMR12006
51749115	KMR20005
51754942	KMR12007
51787397	KMR12002
51856892	KCR12005
55202791	KCR10105
55225248	KCR10105
55701518	KMR12002
55703172	KCR20001
5890987	KCR12009
5890994	KMR12201
5891194	KCR12012
60055388	KCR12013
60652014	KMR12101
60656090	KMR12009
71714450	KCR12007
71714454	KCR10105
71714455	KCR12012
71714458	KCR12005
71714459	KCR12003
71714460	KCR12009
71714468	KCR12006
71714476	KMR12102
71737612	KMR12102
71742699	KCR24002
71745046	KCR20001
71747713	KMR12002

71747857	KMR12201
71753062	KCR12003
71753809	KCR10102
71753811	KMR12007
71753818	KCR12011
71753819	KMR12003
71753820	KCR12004
71753821	KCR12010
71769492	KMR12003
755466	KCR12006
7667784	KCR10105
7693593	KCR10105
7693594	KCR10105
82289841	KCR12009
8582739	KCR12013
92403013	KCR12004
FIAT/ABARTH	**CORAM**
46519901	KMR12001
51754193	KMR12001
FIAT/LANCIA	**CORAM**
60809985	KMR12102
6556601326	KCR12012
6556601326	KCR21301
71753061	KCR12001
FORD	**CORAM**
1001719	KCR27201
1019561	KCR1333
1053115	KCR13005
1085565	KCR13001
1104362	KCR27201
1112547	KCR13002
1133023	KCR13009
1135043	KCR13001
1137830	KCR1333
1201300	KMR13004
1201568	KCR13001

1201568	KCR13003
1201569	KCR13002
1212541	KCR13001
1212546	KCR13001
1212547	KCR13001
1212548	KCR13001
1223640	KMR13003
1230907	KMR13003
1232245	KMR13003
1254308	KMR13003
1308716	KMR13003
1315620	KCR13002
1315620	KCR13008
1326487	KMR13003
1335383	KCR13001
1335383	KCR13003
1336139	KMR13003
1467387	KCR27201
1471852	KMR13001
1471854	KMR13003
1481197	KMR13001
1484266	KCR13006
1484269	KCR13006
1491957	KMR13001
1492160	KCR21007
1492160	KCR21201
1492160	KCR528
1492160	KCR529
1497388	KCR27201
1506577	KMR13001
1508112	KMR13001
1516504	KMR13002
1534483	KMR13002
1541807	KCR12005
1547177	KMR13002
1565443	KCR21201
1565444	KCR21007
1565444	KCR528

1565444	KCR529
1570756	KMR12001
1582282	KCR13008
1583567	KCR13005
1583567	KCR21201
1583567	KCR941
1587548	KCR12005
1587565	KCR12001
1587590	KMR12001
1591389	KCR687
1675466	KMR13002
1699196	KMR13002
1699368	KCR13008
1730689	KMR12001
1746588	KCR13008
1766628	KMR13001
1766722	KCR13002
1766722	KCR13008
1778764	KMR13002
1822804	KCR13002
1822804	KCR13008
1833586	KCR13002
1833586	KCR13008
1896739	KMR13002
1899042	KMR13002
1954435	KCR21203
1954437	KCR21203
1C1J-K018-AA	KMR13004
1K040 AA	KCR27201
1S7W-1215-AA	KCR13009
2001717	KCR13002
2001717	KCR13008
2126980	KMR13002
2356115	KCR13008
2S411A154BA	KCR13001
2S61-1215-BC	KCR13002
2S61-1215-BC	KCR13008
2S61-1215-BD	KCR13002

2S61-1215-BD	KCR13008
2S611238AF	KCR13003
2S61-1238-AF	KCR13001
2S611238AG	KCR13003
2S61-1238-AG	KCR13001
2S6J1A049AA	KCR13003
2S6J-1A049-AA	KCR13001
2S6J-1K018-BA	KCR13002
2S6W-1215-AA	KCR13004
2T14-1215-BA	KCR13006
2T14-1K018-AA	KCR13006
2T14-1K018-AB	KCR13006
2T14-1K018-BA	KCR13006
2T14-1K018-BB	KCR13006
3026E-1200-A	KCR21201
3M51-2C299-RBC	KMR13001
3M51-2C300-CA	KMR13003
3M51-2C300-CB	KMR13003
3M51-2C300-CC	KMR13003
3M51-2C300-CD	KMR13003
3M51-2C300-CE	KMR13003
3M51-2C300-CF	KMR13003
3M51-2C300-CG	KMR13003
3M51-2C300-CH	KMR13003
4103363	KCR13009
4366990	KCR13006
4410218	KCR13006
4410219	KCR13006
4488728	KCR11102
4563516	KCR13009
5007028	KCR528
5007040	KCR687
5020654	KCR1333
5020655	KCR1333
5025899	KCR13005
5025900	KCR13007
5030538	KCR1333
527972	KCR21007

527972	KCR528
527972	KCR529
6077541	KCR941
6170567	KCR1333
6189661	KCR1333
6199622	KCR1333
6485024	KCR13005
6485024	KCR941
6562504	KCR13005
697791	KCR13005
6M21-1A040-AA	KCR27201
6M21-1A049-AA	KCR27201
7201008	KCR27201
7220658	KCR1333
72GB-1200-AA	KCR528
72GB-1200-AA	KCR529
72GB-1215-AA	KCR21007
72GB-1215-AA	KCR528
72GB-1215-AA	KCR529
7M51-2C299-AA	KMR13001
7M51-2C299-AB	KMR13001
7M51-2C299-AC	KMR13001
7M51-2C299-AD	KMR13001
7M51-2C299-AE	KMR13001
81AB-1215-A	KCR687
81AB-1215-AB	KCR687
81AB-1238-AA	KCR21201
81AB-1238-AA	KCR941
81AB-1238-BA	KCR941
89FB-1238-AC	KCR1333
89FB-1238-AD	KCR1333
8V51-2C299-AB	KMR13002
8V51-2C299-AC	KMR13002
8V51-2C299-AD	KMR13002
8V51-2C299-AE	KMR13002
8V51-2C299-AF	KMR13002
8V5J-1K018-AA	KCR13008
92VB-1215-AA	KCR13005
92VB-1225-BA	KCR13007
95VW-1A049-AB	KCR27201
95VW-1K040-AA	KCR27201
96FX-1A049-AB	KCR1333
9S51-1A034-AA	KMR12001
ACP1-1215-A1A	KCR13002
ACP1-1215-A1A	KCR13008
ACP1-1215-AFA	KCR13008
ACP1-1215-AFB	KCR13008
B1BC-1104-A6A	KCR13002
B1BC-1104-A6A	KCR13008
B1BC-1104-A6B	KCR13002
B1BC-1104-A6B	KCR13008
DCP1-1A049-AA	KMR13002
DCP1-2C299-A1B	KMR13002
DCP1-2C299-A1C	KMR13002
DCP1-2C299-B6A	KMR13002
HCPC-1K018-AA	KCR13008
XM34-1216-CA	KCR11102
YC15 2B633 AE	KMR13004
YC15 2B633 AF	KMR13004
GEN. MOTORS/OPEL/VAUXHALL	**CORAM**
24463066	KMR20006
GENERAL MOTORS	**CORAM**
11054489	KCR528
11055109	KCR13005
11070311	KCR528
HOLDEN	**CORAM**
8-94151-213-0	KCR11103
8-94151-213-0	KCR20008
HYUNDAI	**CORAM**
51720-11100	KCR21201
51720-11101	KCR21201
51720-1C000	KCR14001
51720-25000	KCR14001
51720-25001	KCR14001
51720-29100	KCR14001
51720-29150	KCR14001
51720-29300	KCR14001
51720-29400	KCR14001
51730-11100	KCR21007
51730-11100	KCR528
51730-11100	KCR529
51730-11101	KCR21007
51730-11101	KCR528
51730-11101	KCR529
52703-44500	KCR12007
52703-44520	KCR12007
52703-44530	KCR12007
52710-26500	KCR14101
52730-36200	KCR21201
HYUNDAI/KIA	**CORAM**
51720-02000	KCR14001
51720-2J001	KCR14101
52710-26510	KCR14101
52710-26530	KCR14101
52720-1F000	KCR14101
ISUZU	**CORAM**
8-94201-309-0	KCR21201
8-94201-310-0	KCR21007
8-94201-310-0	KCR528
8-94201-310-0	KCR529
9-00093-603-0	KCR21007
9-00093-603-0	KCR528
9-00093-603-0	KCR529
9-00093-604-2	KCR21007
9-00093-604-2	KCR528
9-00093-604-2	KCR529
9-00093-605-0	KCR21201
9-00093-606-1	KCR21201
IVECO	**CORAM**
42470840	KCR12801

42470845	KCR12801
42558516	KCR12802
46393024	KCR12802
503644252	KCR12802
504164177	KCR12801
504288649	KCR12801
7180066	KCR12802
7187566	KCR12802
7189750	KCR12802
93824579	KCR12801
93824580	KCR12801
99825736	KCR12801
JAGUAR	**CORAM**
C2S8275	KCR13009
KIA	**CORAM**
00317 33075	KCR21201
0K201 33047	KCR27101
0K552-33-047	KCR14101
0K56B33047	KCR14101
50310-3E101	KCR14101
50310-3E102	KCR14101
50310-3E200	KCR14101
50310-3E201	KCR14101
51720FL047	KCR14101
52710 FD000	KCR21201
KKY01 33047	KCR21201
KKY01 33075	KCR21007
KKY01 33075	KCR529
KKY0133075	KCR528
MB002 33047	KCR21201
MB002 33075	KCR21007
MB002 33075	KCR529
MB00233075	KCR528
LADA	**CORAM**
2101-3103025	KCR13005
2101-3103025	KCR941

2108-3103020	KCR20008
2108-3103020	KCR21302
2108-3104020	KCR12012
2108-3104020	KCR21301
2108-3104020-00	KCR12012
2108-3104020-00	KCR21301
LANCIA	**CORAM**
51753791	KCR12001
LAND ROVER	**CORAM**
LR041425	KCR25201
RFC 000010	KCR25201
LAND ROVER/ROVER	**CORAM**
GHK 1692	KCR25201
RUD 100150	KCR25201
MAN	**CORAM**
81934200352	KCR21002
MASSEY FERGUSON	**CORAM**
893373 M91	KCR941
895322 M91	KCR13005
895322 M91	KCR941
MAZDA	**CORAM**
1E00-32-61YA	KCR1333
9860-30-2060	KCR11102
B002-33-047	KCR21201
B002-33-075	KCR21007
B002-33-075	KCR528
B002-33-075	KCR529
B092-26-075	KCR21201
B455-33-047C	KCR27101
B455-33-047D	KCR27101
D35016151C	KCR13003
D35026151B	KCR13003
D350-26-151B	KCR13001
D350-26-151C	KCR13001

D350-33-047A	KCR13004
D350-33-047B	KCR13004
D351-33-047A	KCR13008
D351-33-047-A	KCR13002
D351-33-047B	KCR13008
D351-33-047-B	KCR13002
D651-33-047A	KCR13002
D651-33-047A	KCR13008
D651-33-047B	KCR13002
D651-33-047B	KCR13008
S083-33-075	KCR11102
MERCEDES-BENZ	**CORAM**
168 981 03 27	KCR21010
1689810327	KCR19001
1699810006	KCR19002
1699810127	KCR19002
19803002	KCR11101
2013300251	KCR941
2033300051	KCR19003
2109810127	KCR19005
29801902	KCR11101
29803002	KCR19003
29803102	KCR19003
4153340700	KCR21101
59817105	KCR21007
59817105	KCR528
59817105	KCR529
6389810027	KCR19005
6399810427	KCR19004
69811605	KCR21007
69811605	KCR528
69811605	KCR529
9815805	KCR941
9815905	KCR13005
9815905	KCR941
A6399810427	KCR19004

KIT RUOTA
WHEEL BEARING KITS
KITS ROULEMENTS ROUES

LISTA DI COMPARAZIONE CON L'ORIGINALE – OES CROSS REFERENCES – OES REFERENCES CROISEES

MINI	CORAM
31222318454	KMR01101
31226756889	KMR01101

MITSUBISHI	CORAM
MB 001835	KCR21201
MB 002073	KCR21201
MB001836	KCR21007
MB001836	KCR529
MB001839	KCR528

NISSAN	CORAM
40202-1KA0A	KMR21301
40202-3PU0A	KMR21301
40202-BA60A	KMR21301
40202-JG000	KMR21301
40202-JG01A	KMR21301
40202-JG01B	KMR21301
40210-00Q0E	KCR21005
40210-00Q0F	KCR20007
40210-00Q0H	KCR21303
40210-00Q1D	KCR21004
40210-00Q1F	KCR20006
40210-00QAA	KCR21004
40210-00QAC	KCR20006
40210-00QAE	KCR20007
40210-00QAG	KCR21005
40210-00QAK	KCR21005
40210-0F000	KCR21203
40210-18000	KCR11102
40210-1HA19	KCR21101
40210-1HA9D	KCR21101
40210-21000	KCR21201
40210-2S600	KCR21203
40210-50W00	KCR21203
40210-AX000	KCR21101
40215-0F000	KCR21203
40215-2S600	KCR21203
40215-50W00	KCR21203
40215-A0100	KCR21201
40215-Y9500	KCR21201
43202-4BA0A	KMR21302
43202-4CE0A	KMR21302
43202-JG000	KMR21302
43202-JG01A	KMR21302
43202-JG01B	KMR21302
43210 LC42A	KCR12802
43210-00Q0K	KCR20005
43210-00Q0L	KCR21010
43210-00Q0M	KCR21202
43210-00QAB	KCR20005
43210-00QAC	KCR21202
43210-00QAD	KCR19001
43210-00QAD	KCR21010
43210-4A00A	KCR24001
43210-AX000	KCR10005
43210-AX000	KCR10101
43210-AX000	KCR10103
43210-AX000	KCR21001
43210-AZ300	KCR10005
43210-AZ300	KCR10101
43210-AZ300	KCR10103
43210-AZ300	KCR21001

OPEL	CORAM
13507374	KMR20008
1603841	KMR20007
328001	KMR20009
328021	KMR20009
3557914	KCR10002
4451762	KCR21005

OPEL	CORAM
55703172	KCR20001

OPEL	CORAM
93198742	KCR21005
93362342	KCR20004

OPEL/GEN.MOTORS/VAUXHALL	CORAM
13123486	KMR20003
90538940	KMR20003
90538941	KMR20004

OPEL/SAAB/VAUXHALL	CORAM
24421906	KMR20005
93170611	KMR20005

OPEL/VAUXHALL	CORAM
11054489	KCR528
11055109	KCR13005
11070311	KCR528
13123488	KMR20004
13502785	KMR20008
1603065	KCR21007
1603143	KMR12006
1603192	KCR20008
1603193	KCR21007
1603209	KMR20003
1603211	KMR20004
1603243	KMR12006
1603254	KMR20001
1603294	KMR12006
1603337	KCR20001
1603338	KCR12001
1604002	KMR20002
1604301	KMR20002
1604314	KMR20005
1604316	KMR20006
328011	KCR12004
328012	KCR12010
328022	KCR21007
328022	KCR528
328022	KCR529
328023	KCR12004
328104	KCR11103
328104	KCR20008
328980	KCR20004

330011	KCR21007
330011	KCR528
330011	KCR529
330012	KCR13005
4403023	KCR20006
4403044	KCR20005
4408277	KCR21202
4408668	KCR20007
4412598	KCR21005
4419183	KCR21303
4430305	KCR21005
4501154	KCR20009
4700322	KCR20002
4700323	KCR20003
7413409	KCR13005
9,02793E+15	KCR11103
90005147	KCR21007
90486458	KCR20008
90486463	KCR21007
90510543	KMR20002
9111023	KCR20006
9111044	KCR20005
91159917	KCR21202
91160086	KCR20007
9117620	KMR20003
9117622	KMR20004
9119931	KMR20002
9161454	KCR20009
9195608	KCR20004
9203934	KCR20002
9203935	KCR20003
93161059	KCR21005
93161376	KCR21005
93171495	KMR12006
93178626	KMR20006
93178652	KMR20001
93188477	KMR20007
93188889	KCR20001

93188890	KCR12001
93197149	KCR21303
955113921	KCR12004
95511623	KCR12004
95511624	KCR12010
OPEL/VAUXHALL/G. MOTORS	**CORAM**
11054489	KCR21007
11054489	KCR529
11070311	KCR21007
11070311	KCR529
OPEL/VAUXHALL/GENERAL MOTORS	**CORAM**
13110964	KMR20001
OPEL/VAUXHALL/SAAB	**CORAM**
93175327	KMR12006
93186387	KMR12006
OPEL-VAUXHALL	**CORAM**
328018	KCR941
330012	KCR941
7413406	KCR941
7413409	KCR941
8824111	KCR941
OPEL-VAUXHALL-GEN.MOTORS	**CORAM**
11055109	KCR941
11055119	KCR941
PEUGEOT	**CORAM**
1623942280	KCR10107
3326.75	KCR12001
3350.85	KCR10107
3350.92	KCR10001
3350.98	KCR10107
3730.21	KCR10103
RENAULT	**CORAM**
40 20 225 60R	KMR21301
40 20 2JY 00A	KMR21301

402022933R	KMR21302
4021001HA9D	KCR21101
402101554R	KCR21101
402101HA1A	KCR21101
402102977R	KCR21004
402103708R	KCR21303
402104249R	KCR21101
402105733R	KCR21101
402106566R	KCR20007
402107049R	KCR21102
402107435R	KCR21303
402109697R	KCR21005
43202JY00A	KMR21302
432108237R	KCR21001
7701205416	KCR20009
7701205596	KCR21010
7701205778	KCR21002
7701205779	KCR21004
7701205812	KCR21001
7701206740	KCR20006
7701206742	KCR20005
7701206847	KCR20007
7701206849	KCR21202
7701207358	KCR21005
7701207676	KCR21003
7701207966	KCR21005
7701208058	KCR21008
7701208059	KCR21006
7701208427	KCR21005
7701208767	KCR21001
7701209504	KCR21008
7701210111	KCR21003
7701463523	KCR21009
7701463987	KCR21010
7701464049	KCR21004
7701465181	KCR21002
7701465735	KCR21001
7703090251	KCR21002

7703090253	KCR10005
7703090253	KCR10101
7703090253	KCR10103
7703090253	KCR21001
7703090283	KCR21002
7703090313	KCR21009
7703090341	KCR13005
7703090365	KCR19001
7703090365	KCR21010
7703090404	KCR21002
7703090433	KCR10005
7703090433	KCR10101
7703090433	KCR10103
7703090433	KCR21001
RENAULT TRUCKS	**CORAM**
7485139097	KCR12802
RENAULT/DACIA	**CORAM**
402108022R	KCR21102
6001547696	KCR21004
6001550915	KCR21101
7701207677	KCR21101
ROVER	**CORAM**
CAC 4603	KCR21007
CAC 4603	KCR528
CAC 4603	KCR529
CAC 4999	KCR11101
GHB 107	KCR21007
GHB 107	KCR529
GHB102	KCR13005
GHB102	KCR941
GHB105	KCR941
GHB107	KCR528
RTC3398	KCR13005
RTC3398	KCR941
RTC3808	KCR941

SAAB	**CORAM**
12799815	KMR12006
30520278	KCR01003
4242202	KCR13006
4398046	KMR20002
4689923	KCR13006
4778494	KMR20002
4839122	KMR20002
5058185	KMR20002
8934655	KCR11101
8942765	KCR01003
9104209	KCR01003
SEAT	**CORAM**
025 140 301 A	KCR12012
028140301A	KMR12201
3981586	KMR12201
3981590	KCR12012
6Q0407621AD	KMR27102
BA158236.00	KCR12013
BA158237.00	KCR12013
FA158244.00	KCR13005
FA158244.00	KCR941
GE158236.00	KCR941
HB140302.02	KCR12012
HB140302.02	KCR21301
HB149002.01	KMR12004
RF149002.01	KMR12004
SEAT/SKODA	**CORAM**
6Q0407621BR	KMR27102
SEAT/SKODA/VW	**CORAM**
3G0598611	KMR27301
6C0407621	KMR27102
SEAT/VW	**CORAM**
6X0598477	KMR27202

SKODA	**CORAM**
969-300171	KCR21007
969-300171	KCR529
969-300291	KCR21007
969-300291	KCR528
969-300291	KCR529
969-300590	KCR941
SKODA/VW	**CORAM**
3G0598611A	KMR27301
6R0407621E	KMR27102
969-300171	KCR528
SMART	**CORAM**
A4513300059	KMR19101
A4513300159	KMR19101
SUBARU	**CORAM**
61030204	KCR11102
906100004	KCR11102
906100005	KCR11102
SUZUKI	**CORAM**
43440-79J00	KCR24002
43440-80J00	KCR24002
43440B77M00N	KCR24002
43440M55K00	KCR24002
46860-80G00	KCR24001
46860M68K00	KCR24001
TALBOT	**CORAM**
16172300	KCR941
16172400	KCR13005
16172400	KCR941
20339 N	KCR21007
20339N	KCR528
20339N	KCR529
9192000	KCR13005
9192000	KCR941

KIT RUOTA
WHEEL BEARING KITS
KITS ROULEMENTS ROUES
LISTA DI COMPARAZIONE CON L'ORIGINALE – OES CROSS REFERENCES – OES REFERENCES CROISEES

TOYOTA	CORAM
42410-0D010	KMR26001
42410-0D030	KMR26001
42410-52020	KMR26001
42410-52021	KMR26001
42450-0D010	KMR26002
42450-0D030	KMR26002
42450-0D051	KMR26003
42450-0D060	KMR26003
42450-0D080	KMR26003
42450-0H010	KMR10001
42450-52020	KMR26002
42450-52021	KMR26002
42450-52060	KMR26003
42450-52061	KMR26003
42450-52070	KMR26003
42450-74020	KMR26003
60401-00283	KCR26002
900363-40066	KCR26003
900363-T0015	KCR26003
900363-T0018	KCR26003
90080-36087	KCR26003
90080-36108	KCR14102
90080-36136	KCR26003
90080-36137	KCR26003
90080-36149	KCR26003
90080-36176	KCR26003
90080-36178	KCR14102
90363-40079	KCR26002
90363-T0023	KCR26002
90363-W0006	KCR26002
90366-17010	KCR21007
90366-17010	KCR528
90366-17010	KCR529
90368-17017	KCR21007
90368-17017	KCR528
90368-17017	KCR529
90368-19037	KCR21201
90368-26027	KCR21201
90368-34083	KCR11101
90369-38021	KCR14102
90369-38022	KCR14102
90369-W0001	KCR26001
VAUXHALL/GENERAL MOTORS	**CORAM**
9966510	KCR11101
VOLVO	**CORAM**
181585 + 181584	KCR13005
181585 + 181584	KCR941
183578	KCR11101
184447	KCR21007
184447	KCR528
VW	**CORAM**
091517185 B	KCR12007
171407625 A	KCR21302
171407625A	KCR20008
171407625C	KCR20008
171407625C	KCR21302
1J0 407 625	KCR27101
211 405 645 C	KCR21201
211 405 645 C	KCR941
211 405 645 D	KCR941
211405645D	KCR13005
291407645	KCR10105
311 405 625	KCR21201
311 405 625 E	KCR529
311 405 645	KCR529
311 405 645 B	KCR529
311405625E	KCR21007
311405625E	KCR528
311405645	KCR21007
311405645	KCR528
311405645B	KCR528
357407625 A	KCR27002
357407625 E	KCR27002
357498625 C	KCR27002
443407625F	KCR27103
443407625H	KCR27103
4A0407625A	KCR27103
6U0 501 319	KCR529
6U0501319	KCR21007
6U0501319	KCR528
7H0401611 D	KMR27006
7H0401611 E	KMR27006
7H0401611 H	KMR27006
7H0498611	KMR27006
7L0498611	KMR27006
7M0407625	KCR27201
7M3598625	KCR27201
89340625	KCR27102
89340625 C	KCR27102
900 070 9340	KCR941
9000709340	KCR13005
91517185	KCR12007
966 300 171	KCR529
969300171	KCR21007
999 059 01800	KCR941
999 059 06500	KCR941
99905906100	KCR11101
99905906500	KCR13005
L1KD407621	KMR27001
L1TD601611	KMR27301
V 893407625 G	KCR27102
WARTBURG	**CORAM**
9900011425	KCR12007

KIT RUOTA
WHEEL BEARING KITS
KITS ROULEMENTS ROUES
LISTA DI COMPARAZIONE CON COMPETITORS – COMPETITORS CROSS REFERENCES
REFERENCES CROISEES AVEC CODES DES CONCURRENTS

BREDA	CORAM
KRT1551	KCR12013
KRT1553	KCR12006
KRT1554	KCR12012
KRT1561	KMR12201
KRT1564	KMR12105
KRT1565	KCR12008
KRT1575	KCR12009
KRT1576	KCR10008
KRT1577	KCR12001
KRT1581	KMR27004
KRT1584	KCR10104
KRT1586	KCR12007
KRT1587	KMR27102
KRT1595	KCR27101
KRT1609	KCR10105
KRT1614	KMR12004
KRT1617	KMR12102
KRT2105	KCR27103
KRT2106	KCR27102
KRT2129	KCR10108
KRT2136	KCR528
KRT2141	KCR687
KRT2157	KCR21302
KRT2164	KCR941
KRT2165	KCR10004
KRT2172	KCR21007
KRT2173	KCR20008
KRT2179	KCR11101
KRT2184	KCR10007
KRT2196	KCR21002
KRT2223	KCR27001
KRT2224	KCR27002
KRT2238	KCR12005
KRT2244	KCR12004
KRT2252	KCR12010
KRT2262	KCR13005
KRT2264	KCR12801
KRT2272	KCR12003
KRT2274	KCR13002
KRT2288	KCR19005
KRT2289	KCR20004
KRT2293	KMR20003
KRT2295	KMR20004
KRT2296	KCR20002
KRT2297	KCR10002
KRT2301	KCR20009
KRT2304	KCR25201
KRT2317	KMR27001
KRT2322	KMR01001
KRT2330	KCR10102
KRT2331	KCR10106
KRT2332	KCR10001
KRT2335	KCR13009
KRT2336	KMR13004
KRT2338	KCR13004
KRT2339	KMR13003
KRT2340	KMR01101
KRT2341	KCR20006
KRT2343	KCR20007
KRT2345	KMR20001
KRT2347	KCR21101
KRT2348	KCR21003
KRT2349	KCR21005
KRT2350	KCR21004
KRT2356	KMR27006
KRT2366	KMR13002
KRT2432	KCR19001
KRT2438	KMR20002
KRT2440	KCR20003
KRT2479	KCR11102
KRT2499	KMR27201
KRT2500	KCR529
KRT2508	KCR01003
KRT2533	KMR12101
KRT2536	KMR12001
KRT2549	KCR1333
KRT2552	KCR21301
KRT2558	KMR27103
KRT2595	KCR10103
KRT2607	KCR21010
KRT2614	KCR21009
KRT2665	KCR21001
KRT2678	KCR13007
KRT2686	KCR10101
KRT2690	KMR12003
KRT2691	KCR12802
KRT2693	KMR12005
KRT2698	KCR13003
KRT2699	KCR27201
KRT2701	KMR12009
KRT2703	KMR27005
KRT2704	KMR27301
KRT2705	KMR27003
KRT2709	KCR12011
KRT2713	KCR10005
KRT2723	KCR20005
KRT2724	KCR21202
KRT2725	KMR20005
KRT2727	KMR20006
KRT2734	KCR21008
KRT2735	KCR21006
KRT2741	KMR27202
KRT2750	KCR10006
KRT2752	KCR01002
KRT2753	KCR10107
KRT2754	KCR26001
KRT2761	KMR12104
KRT2774	KCR12002
KRT2779	KMR27101
KRT2780	KMR27002
KRT2784	KMR12103
KRT2787	KCR11103
KRT2802	KMR12006

KRT2805	KCR24002
KRT2809	KCR13006
KRT2827	KCR19003
KRT2830	KCR19002
KRT2839	KMR20007
KRT2840	KCR20001
KRT2859	KMR20009
KRT2872	KCR21102
KRT2876	KMR19101
KRT2888	KCR01001
KRT2908	KMR10001
KRT2914	KMR12002
KRT2922	KMR13001
KRT2947	KCR19004
KRT2963	KMR12007
KRT2979	KMR11001
KRT7121	KCR14102
KRT7123	KCR26003
KRT7513	KCR21201
KRT7641	KMR26001
KRT7642	KMR26002
KRT7674	KCR14001
KRT7686	KCR14101
KRT7709	KMR21301
KRT7711	KCR21203
KRT7730	KCR26002
KRT7860	KMR21302
KRT7886	KMR26003
KRT7923	KCR24001
KRT8109	KCR10003
KRT8131	KCR13008
KRT8133	KCR21303
KRT8139	KCR13001
KRT8175	KMR20008
FAG	**CORAM**
713 606 040	KMR12101
713 6063 30	KMR12009
713 6063 40	KMR12104

713 6063 50	KMR12002
713 6063 60	KMR12103
713 6063 90	KCR20001
713 6064 00	KCR12001
713 6100 20	KCR27101
713 6100 80	KCR27102
713 6101 00	KCR27002
713 6102 20	KMR27201
713 6102 30	KCR529
713 6103 10	KCR27001
713 6103 20	KMR27202
713 6104 10	KCR27103
713 6104 30	KMR27004
713 6104 60	KCR27201
713 6104 70	KMR27102
713 6104 90	KMR27103
713 6106 10	KMR27001
713 6106 20	KMR27301
713 6106 50	KMR27006
713 6107 00	KMR27005
713 6109 00	KMR27101
713 6109 60	KMR27003
713 6109 90	KMR27002
713 6132 80	KCR21201
713 6137 50	KCR21203
713 6139 10	KMR21301
713 6139 20	KMR21302
713 6157 30	KCR13008
713 6186 60	KCR14102
713 6186 70	KMR26001
713 6186 80	KMR26002
713 6187 70	KCR26003
713 6188 70	KMR10001
713 6189 10	KCR26002
713 6189 90	KMR26003
713 6195 10	KCR14001
713 6203 10	KCR25201
713 6234 80	KCR24001

713 6234 90	KCR24002
713 6251 20	KCR11102
713 6251 40	KCR11101
713 6260 90	KCR14101
713 6300 30	KCR21004
713 6301 80	KCR21002
713 6302 50	KCR21009
713 6302 70	KCR21010
713 6303 00	KCR21001
713 6305 80	KCR10008
713 6307 60	KCR10002
713 6307 80	KCR20005
713 6307 90	KCR20006
713 6308 00	KCR20009
713 6308 40	KCR21101
713 6308 50	KCR21003
713 6309 50	KCR21008
713 6309 70	KCR21006
713 6311 10	KCR21102
713 6401 80	KCR10108
713 6403 10	KCR10001
713 6403 30	KCR12011
713 6403 90	KCR10102
713 6404 00	KCR10106
713 6404 70	KCR10006
713 6404 90	KCR26001
713 6405 00	KCR10107
713 6405 50	KCR12002
713 6405 70	KMR12007
713 6440 60	KMR20004
713 6440 70	KMR20003
713 6440 80	KCR20004
713 6440 90	KMR12006
713 6441 00	KCR20002
713 6441 10	KCR20003
713 6441 20	KCR20007
713 6441 40	KCR21202
713 6441 60	KCR20008

713 6442 60	KMR20005
713 6442 90	KCR21005
713 6443 20	KMR20001
713 6443 30	KMR20006
713 6445 10	KCR21007
713 6445 70	KMR20002
713 6446 60	KCR11103
713 6448 10	KMR20007
713 6449 20	KMR20009
713 6449 40	KMR20008
713 6450 40	KCR21303
713 6451 50	KMR11001
713 6493 00	KCR01003
713 6493 50	KMR01101
713 6493 90	KCR01002
713 6494 20	KCR01001
713 6500 60	KCR10004
713 6500 70	KCR10005
713 6500 70	KCR10101
713 6501 60	KCR10007
713 6502 90	KCR10103
713 6503 10	KCR12007
713 6503 30	KCR10104
713 6504 20	KCR10105
713 6506 10	KCR10003
713 6670 50	KCR19005
713 6670 60	KMR01001
713 6673 20	KCR19001
713 6673 70	KCR941
713 6678 20	KCR19003
713 6679 60	KCR19002
713 6679 80	KCR19004
713 6680 60	KMR19101
713 6780 30	KCR13001
713 6780 90	KCR687
713 6781 00	KCR13002
713 6781 50	KCR528
713 6783 20	KCR1333

713 6784 10	KCR13009
713 6785 00	KCR13005
713 6786 00	KCR13007
713 6786 20	KCR13004
713 6786 40	KCR13003
713 6786 50	KMR13004
713 6787 90	KMR13003
713 6788 70	KCR13006
713 6789 40	KMR13001
713 6790 80	KMR13002
713 6900 10	KMR12201
713 6900 80	KCR12008
713 6901 10	KCR12013
713 6901 60	KCR12012
713 6902 30	KMR12102
713 6902 40	KMR12004
713 6903 60	KMR12005
713 6905 00	KCR12006
713 6905 10	KCR12009
713 6907 10	KMR12001
713 6907 30	KMR12003
713 6907 50	KCR12003
713 6907 60	KMR12105
713 6908 00	KCR12004
713 6908 10	KCR12010
713 6908 30	KCR12801
713 6908 40	KCR12802
713 6908 60	KCR12005
713 6910 10	KCR21302
713 6911 00	KCR21301
SKF	**CORAM**
VKBA1306	KCR21302
VKBA1307	KCR21301
VKBA1310	KCR21201
VKBA1333	KCR1333
VKBA1355	KCR27102
VKBA1356	KCR27103
VKBA1358	KCR27002

VKBA1401	KCR12008
VKBA1439	KCR12009
VKBA1440	KMR12102
VKBA1443	KMR12005
VKBA1444	KCR12007
VKBA1460	KCR01003
VKBA1465	KCR13005
VKBA1466	KCR13007
VKBA3205	KCR21203
VKBA3256	KCR20008
VKBA3414	KCR12006
VKBA3423	KCR10008
VKBA3428	KCR10104
VKBA3429	KCR10105
VKBA3450	KCR27201
VKBA3455	KCR27101
VKBA3456	KMR27201
VKBA3486	KCR19005
VKBA3496	KCR21002
VKBA3500	KCR20009
VKBA3502	KMR12105
VKBA3503	KMR12101
VKBA3511	KMR20003
VKBA3513	KMR20004
VKBA3521	KCR19001
VKBA3525	KCR21001
VKBA3530	KCR13004
VKBA3531	KCR13002
VKBA3532	KCR13001
VKBA3536	KMR27004
VKBA3538	KCR12003
VKBA3540	KMR12001
VKBA3548	KMR27202
VKBA3551	KCR12801
VKBA3552	KCR12802
VKBA3554	KCR10004
VKBA3555	KMR20002
VKBA3556	KCR10101

VKBA3567	KMR27103
VKBA3569	KMR27102
VKBA3571	KCR20002
VKBA3572	KCR20003
VKBA3575	KCR13009
VKBA3577	KCR12005
VKBA3583	KMR12003
VKBA3584	KCR10002
VKBA3588	KMR13004
VKBA3596	KCR21004
VKBA3597	KMR12009
VKBA3598	KCR12004
VKBA3599	KCR12010
VKBA3600	KCR20004
VKBA3603	KCR25201
VKBA3606	KMR27005
VKBA3613	KCR20006
VKBA3614	KCR20005
VKBA3617	KCR21202
VKBA3618	KCR20007
VKBA3620	KMR12006
VKBA3624	KMR20005
VKBA3637	KCR21101
VKBA3638	KCR21003
VKBA3639	KCR21008
VKBA3640	KCR10102
VKBA3641	KCR10106
VKBA3642	KCR12011
VKBA3643	KMR27001
VKBA3644	KMR27301
VKBA3646	KMR27006
VKBA3648	KCR21005
VKBA3651	KMR20001
VKBA3653	KMR20006
VKBA3656	KMR27003
VKBA3657	KCR10001
VKBA3658	KCR10005
VKBA3660	KMR13003

VKBA3661	KMR13001
VKBA3667	KMR01001
VKBA3674	KMR01101
VKBA3676	KCR21006
VKBA3680	KCR10006
VKBA3682	KCR01002
VKBA3683	KCR10107
VKBA3684	KCR26001
VKBA3691	KMR12104
VKBA3697	KMR10001
VKBA3786	KCR11103
VKBA3796	KCR11102
VKBA3901	KCR11101
VKBA3907	KCR14001
VKBA3929	KCR14102
VKBA3930	KMR26001
VKBA3931	KMR26002
VKBA3935	KCR14101
VKBA528	KCR528
VKBA529	KCR529
VKBA559	KCR12012
VKBA6509	KCR19002
VKBA6515	KCR13003
VKBA6520	KCR13006
VKBA6530	KCR19003
VKBA6540	KCR12001
VKBA6541	KMR12002
VKBA6550	KCR20001
VKBA6556	KMR27002
VKBA6570	KCR12002
VKBA6571	KMR12007
VKBA6578	KCR24002
VKBA6582	KMR12103
VKBA6626	KMR19101
VKBA6632	KCR01001
VKBA6649	KMR27101
VKBA6653	KCR13008
VKBA6654	KMR13002

VKBA6667	KMR20008
VKBA6682	KCR21102
VKBA6688	KMR20007
VKBA6715	KMR20009
VKBA6721	KCR21303
VKBA6726	KCR10003
VKBA6820	KCR24001
VKBA6828	KMR26003
VKBA6831	KCR26003
VKBA687	KCR687
VKBA6878	KCR26002
VKBA6996	KMR21301
VKBA6997	KMR21302
VKBA734	KMR12201
VKBA7496	KMR11001
VKBA882	KCR10007
VKBA906	KCR27001
VKBA915	KCR10108
VKBA927	KCR12013
VKBA940	KMR12004
VKBA941	KCR941
VKBA944	KCR21007
VKBA961	KCR10103
VKBA969	KCR21009
VKBA976	KCR21010

SNR	**CORAM**
153.35	KCR12001
R140.01	KCR20005
R140.06	KCR20006
R140.06	KCR20009
R140.13	KCR12801
R140.17	KCR10102
R140.37	KCR12011
R140.38	KCR10106
R140.77	KCR12007
R140.86	KCR13007
R140.87	KCR13005
R140.94	KCR10104

R140.95	KCR10105
R141.00	KMR12007
R141.05	KCR13006
R141.29	KCR21303
R141.45	KCR12002
R141.46	KCR19004
R141.86	KCR12802
R150.24	KCR01003
R150.35	KMR01001
R150.41	KCR01002
R150.42	KCR01001
R151.14	KCR941
R151.27	KCR19005
R151.32	KCR19001
R151.36	KCR19003
R151.46	KCR19002
R152.17	KCR528
R152.19	KCR687
R152.23	KCR13009
R152.37	KCR1333
R152.55	KCR13002
R152.56	KCR13003
R152.56S	KCR13001
R152.60	KMR13004
R152.62	KMR13003
R152.74	KMR13002
R152.92	KMR13001
R153.07	KCR21007
R153.14	KCR20008
R153.27	KMR20002
R153.32	KMR20003
R153.35	KCR20002
R153.36	KCR20003
R153.39	KCR20004
R153.40	KMR12006
R153.41	KMR20005
R153.48	KMR20001
R153.49	KMR20006

R153.53	KMR20007
R153.57	KCR20001
R153.59	KMR20008
R153.67	KMR20009
R1533.33	KMR20004
R154.13	KCR529
R154.23	KCR27001
R154.28	KCR27002
R154.42	KCR27201
R154.45	KMR27202
R154.54	KMR27301
R154.55	KMR27003
R154.56	KMR27001
R154.58	KMR27006
R154.61	KMR27002
R154.62	KMR27006
R155.16	KCR21004
R155.19	KCR21009
R155.32	KCR21002
R155.58	KCR21010
R155.63	KCR21001
R155.69	KCR20007
R155.70	KCR21202
R155.74	KCR21005
R155.75	KCR21101
R155.76	KCR21003
R155.77	KCR21008
R155.78	KCR21006
R155.87	KCR21102
R157.14	KCR27103
R157.20	KMR27201
R157.22	KCR27101
R157.23	KCR27102
R157.26	KMR27004
R157.27	KMR27005
R157.31	KMR27103
R157.32	KMR27102
R157.43	KMR27101

R158.02	KCR12013
R158.03	KCR12013
R158.07	KCR12012
R158.10	KMR12004
R158.13	KMR12201
R158.22	KMR12102
R158.25	KCR12008
R158.29	KMR12005
R158.35	KCR12006
R158.36	KCR12009
R158.42	KCR12005
R158.44	KCR12003
R158.53	KMR12003
R158.54	KCR12004
R158.58	KCR12010
R158.59	KMR12002
R158.62	KMR12001
R159.14	KCR10007
R159.17	KCR10004
R159.19	KCR10103
R159.31	KCR10008
R159.38	KCR10101
R159.44	KCR10002
R159.47	KCR10107
R159.48	KCR10006
R160.25	KMR12105
R160.33	KMR12103
R160.48	KMR12101
R160.51	KMR12104
R161.26	KCR25201
R162.50	KMR01101
R166.03	KCR10001
R166.07	KCR10005
R166.13	KCR10108
R166.33	KCR10003
R168.15	KCR21201
R168.59	KCR21203
R168.73	KMR21301

R168.75	KMR21302
R169.29	KCR14102
R169.30	KMR26001
R169.51	KMR26002
R169.58	KCR26001
R169.59	KMR10001
R169.61	KCR26003
R169.75	KCR26002
R169.76	KMR26003
R170.43	KCR13004
R170.44	KCR13008
R172.03	KCR21302
R172.04	KCR21301
R177.17	KCR24001
R177.21	KCR24002
R181.30	KMR11001
R184.05	KCR14001
R184.52	KCR11102
R184.53	KCR11101
R187.03	KMR19101
R189.07	KCR14101
R190.00	KCR11103

KIT RUOTA
WHEEL BEARING KITS
KITS ROULEMENTS ROUES
IMMAGINI – IMAGES – IMAGES

KCR01001 — Mis: 45x81x41

BMW	33412406278		
BMW	33416762321		
BMW	33416762322		
BMW	33416775842		

KCR01002 — Mis: 42x75x37

BMW	33416762317		

KCR01003 — Mis: 42x75x37

ALFA ROMEO	115204	SAAB	8942765
ALFA ROMEO	11600.25401.08	SAAB	9104209
BMW	33411130617		
BMW	33412220987		
SAAB	30520278		

KCR10001 — Mis: 37x72x33

CITROEN	3350.72		
CITROEN/PEUGEOT	3350.86		
PEUGEOT	3350.92		

KCR10002 — Mis: 42x82x36

CITROEN	3350.84		
CITROEN/PEUGEOT	1606623580		
CITROEN/PEUGEOT	3350.69		
CITROEN/PEUGEOT	3350.97		
OPEL	3557914		

KCR10003 — Mis: 25x52x42

CITROEN/PEUGEOT	3748.A1		

KCR10004 — Mis: 37x72x33

CITROEN/PEUGEOT	3350.32		

KCR10005 — Mis: 25x52x37

CITROEN	3748.77	NISSAN	43210-AZ300
CITROEN/PEUGEOT	3730.21	RENAULT	7703090253
CITROEN/PEUGEOT	95592226	RENAULT	7703090433
CITROEN/PEUGEOT	95608940		
NISSAN	43210-AX000		

KCR10006 — Mis: 25x60x45

CITROEN/PEUGEOT	3748.83		

KCR10007 Mis: 35x72x33

CITROEN/PEUGEOT	3326.31		
CITROEN/PEUGEOT	3350.17		
CITROEN/PEUGEOT	95654076		

KCR10008 Mis: 44x82,5x37

ALFA ROMEO/FIAT/LANCIA	71714473	FIAT	1311506080
ALFA ROMEO/FIAT/LANCIA	9567217680	FIAT	1330512080
CITROEN/PEUGEOT	3326.40		
CITROEN/PEUGEOT	3350.27		
CITROEN/PEUGEOT	3350.91		

KCR10101 Mis: 25x52x37

CITROEN/PEUGEOT	3730.21	NISSAN	43210-AZ300
CITROEN/PEUGEOT	3748.39	RENAULT	7703090253
CITROEN/PEUGEOT	955922226	RENAULT	7703090433
CITROEN/PEUGEOT	95608940		
NISSAN	43210-AX000		

KCR10102 Mis: 49x84x48

CITROEN/PEUGEOT	1606375080		
CITROEN/PEUGEOT	3326.62		
FIAT	1328046080		
FIAT	1347527080		
FIAT	71753809		

KCR10103 Mis: 25x52x37

CITROEN/PEUGEOT	3748.17	NISSAN	43210-AX000
CITROEN/PEUGEOT	95592226	NISSAN	43210-AZ300
CITROEN/PEUGEOT	95608940	PEUGEOT	3730.21
CITROEN/PEUGEOT	95654078	RENAULT	7703090253
DACIA	6001539074	RENAULT	7703090433

KCR10104 Mis: 55x90x23

CITROEN/PEUGEOT/FIAT	1300535080		
CITROEN/PEUGEOT/FIAT	1300535080		
CITROEN/PEUGEOT/FIAT	1300535080		
CITROEN/PEUGEOT/FIAT	1300535080		

KCR10105 Mis: 30/40x55/68x17/19.5

CITROEN/PEUGEOT	3350.25	FIAT	4330648
CITROEN/PEUGEOT	3730.20	FIAT	4470124
CITROEN/PEUGEOT	3735.15	FIAT	46444775
CITROEN/PEUGEOT	ZF04330648	FIAT	55202791
CITROEN/PEUGEOT	ZF04470124	FIAT	55225248

KCR10106 Mis: 55x90x60

CITROEN/PEUGEOT	1606375180		
CITROEN/PEUGEOT	3326.63		
FIAT	1328054080		

KCR10107 Mis: 45x83x44

CITROEN	1607704180		
CITROEN/PEUGEOT	3350.82		
PEUGEOT	1623942280		
PEUGEOT	3350.85		
PEUGEOT	3350.98		

KIT RUOTA
WHEEL BEARING KITS
KITS ROULEMENTS ROUES
IMMAGINI – IMAGES – IMAGES

KCR10108 Mis: 42x82x36

CITROEN	95496252	CITROEN/PEUGEOT	95619160
CITROEN/PEUGEOT	3307.56	CITROEN/PEUGEOT	96129301
CITROEN/PEUGEOT	3326.35		
CITROEN/PEUGEOT	3350.16		
CITROEN/PEUGEOT	95590022		

KCR11101 Mis: 35x60x15.9

CHEVROLET/DAEWOO	96285525	SAAB	8934655
DAEWOO	96316760	TOYOTA	90368-34083
MERCEDES-BENZ	19803002	VAUXHALL/GENERAL MOTORS	9966510
MERCEDES-BENZ	29801902	VOLVO	183578
ROVER	CAC 4999	VW	99905906100

KCR11102 Mis: 47/52x20/25x15.3/16.3

CHEVROLET/DAEWOO	96316634	MAZDA	9860-30-2060
CHEVROLET/DAEWOO	96316635	MAZDA	5083-33-075
DAIHATSU	90043-68006	NISSAN	40210-18000
FORD	4488728	SUBARU	61030204
FORD	XM34-1216-CA	SUBARU	906100004

KCR11103 Mis: 34x64x37

CHEVROLET/DAEWOO	84536117	HOLDEN	8-94151-213-0
CHEVROLET/DAEWOO	94535249	OPEL/VAUXHALL	328104
DAEWOO	09267-34001	OPEL/VAUXHALL	9,02793E+15
DAEWOO	90279331		
DAEWOO	94535247		

KCR12001 Mis: 37x72x37

ALFA ROMEO/FIAT/LANCIA	46519869	ALFA ROMEO/LANCIA	55703171
ALFA ROMEO/FIAT/LANCIA	60815902	CITROEN	1618649280
ALFA ROMEO/FIAT/LANCIA	71714457	CITROEN/PEUGEOT	3326.77
ALFA ROMEO/FIAT/LANCIA/ABARTH	46773662	FIAT	46512970
ALFA ROMEO/FIAT/LANCIA/ABARTH	71745047	FIAT/LANCIA	71753061

KCR12002 Mis: 55x90x54

CITROEN/PEUGEOT	1606374680		
CITROEN/PEUGEOT	3326.71		
FIAT	51745702		

KCR12003 Mis: 35x72x33

ALFA ROMEO/FIAT/LANCIA	46527732	CITROEN/PEUGEOT	3326.72
ALFA ROMEO/FIAT/LANCIA	46527733	CITROEN/PEUGEOT	3326.76
ALFA ROMEO/FIAT/LANCIA	46773660	FIAT	71714459
ALFA ROMEO/FIAT/LANCIA	55703170	FIAT	71753062
ALFA ROMEO/FIAT/LANCIA	71745046		

KCR12004 Mis: 37x74x37

FIAT	46836196	OPEL/VAUXHALL	328023
FIAT	46836198	OPEL/VAUXHALL	955113921
FIAT	71753820	OPEL/VAUXHALL	95511623
FIAT	92403013		
OPEL/VAUXHALL	328011		

KCR12005 Mis: 35x66x33

FIAT	46531160		
FIAT	51856892		
FIAT	71714458		
FORD	1541807		
FORD	1587548		

KIT RUOTA
WHEEL BEARING KITS
KITS ROULEMENTS ROUES
IMMAGINI – IMAGES – IMAGES

KCR12006 Mis: 35x72x33

ALFAROMEO/FIAT/FORD/LANCIA	7555466	FIAT	755466
ALFAROMEO/FIAT/LANCIA	46528566		
ALFAROMEO/FIAT/LANCIA	46773659		
FIAT	46423871		
FIAT	71714468		

KCR12007 Mis: 50x80x20

CITROEN/PEUGEOT	3326.27	HYUNDAI	52703-44500
CITROEN/PEUGEOT	3350.21	HYUNDAI	52703-44520
CITROEN/PEUGEOT	3350.29	HYUNDAI	52703-44530
FIAT	4330647	VW	091517185 B
FIAT	71714450	VW	91517185

KCR12008 Mis: 35x66x33

ALFA ROMEO/FIAT/LANCIA	46423870		
ALFA ROMEO/FIAT/LANCIA	51753789		
ALFA ROMEO/FIAT/LANCIA	5890991		
ALFA ROMEO/FIAT/LANCIA	71714466		
ALFA ROMEO/FIAT/LANCIA	7558570		

KCR12009 Mis: 37x72x37

ALFA ROMEO/FIAT	60815880	ALFA ROMEO/FIAT/LANCIA	60801380
ALFA ROMEO/FIAT/LANCIA	46423869	ALFA ROMEO/FIAT/LANCIA	60811546
ALFA ROMEO/FIAT/LANCIA	46474537	ALFA ROMEO/FIAT/LANCIA	60813089
ALFA ROMEO/FIAT/LANCIA	46529970	ALFA ROMEO/FIAT/LANCIA	60814780
ALFA ROMEO/FIAT/LANCIA	51754191	ALFA ROMEO/FIAT/LANCIA	82374669

KCR12010 Mis: 42x82.5x37

FIAT	46836200		
FIAT	50700495		
FIAT	71753821		
OPEL/VAUXHALL	328012		
OPEL/VAUXHALL	95511624		

KCR12011 Mis: 42x75x60

CITROEN/PEUGEOT	3730.32		
FIAT	1328029080		
FIAT	71753818		

KCR12012 Mis: 30x60x37

ALFA ROMEO/FIAT/LANCIA	5937306	FIAT/LANCIA	6556601326
ALFA ROMEO/FIAT/LANCIA	5947834	LADA	2108-3104020
ALFA ROMEO/FIAT/LANCIA	71746393	LADA	2108-3104020-00
FIAT	5891194	SEAT	025 140 301 A
FIAT	71714455	SEAT	3981590

KCR12013 Mis: 15/23x42/52x13/15

FIAT	336658	SEAT	BA158237.00
FIAT	46576155		
FIAT	60055388		
FIAT	8582739		
SEAT	BA158236.00		

KCR12801 Mis: 40x73x55

IVECO	42470840	IVECO	93824580
IVECO	42470845	IVECO	99825736
IVECO	504164177		
IVECO	504288649		
IVECO	93824579		

KIT RUOTA
WHEEL BEARING KITS
KITS ROULEMENTS ROUES
IMMAGINI – IMAGES – IMAGES

KCR12802 Mis: 55x90x60

IVECO	42558516	IVECO	7189750
IVECO	46393024	NISSAN	43210 LC42A
IVECO	503644252	RENAULT TRUCKS	7485139097
IVECO	7180066		
IVECO	7187566		

KCR13001 Mis: 29x53x37

FORD	1085565	FORD	1212547
FORD	1135043	FORD	1212548
FORD	1201568	FORD	1335383
FORD	1212541	FORD	2S411A154BA
FORD	1212546	FORD	2S61-1238-AF

KCR13002 Mis: 39x72x37

FORD	1112547	FORD	1833586
FORD	1201569	FORD	2001717
FORD	1315620	FORD	2S61-1215-BC
FORD	1766722	FORD	2S61-1215-BD
FORD	1822804	FORD	2S6J-1K018-BA

KCR13003 Mis: 29x53x37

FORD	1201568	MAZDA	D35016151C
FORD	1335383	MAZDA	D35026151B
FORD	2S611238AF		
FORD	2S611238AG		
FORD	2S6J1A049AA		

KCR13004 Mis: 39x72x37

FORD	2S6W-1215-AA		
MAZDA	D350-33-047A		
MAZDA	D350-33-047B		

KCR13005 Mis: 19/35x45.2/62x15.5/18

ALFA ROMEO	11900.21408.01	FORD	1583567
ALFA ROMEO	60523333	FORD	5025899
BMW	31212634103	FORD	6485024
FIAT	4096104	FORD	6562504
FORD	1053115	FORD	697791

KCR13006 Mis: 39x74x39

FORD	1484266	FORD	2T14-1K018-BA
FORD	1484269	FORD	2T14-1K018-BB
FORD	2T14-1215-BA	FORD	4366990
FORD	2T14-1K018-AA	FORD	4410218
FORD	2T14-1K018-AB	FORD	4410219

KCR13007 Mis: 45x85x30.3

FORD	5025900		
FORD	92VB-1225-BA		

KCR13008 Mis: 39x72x37

FORD	1315620	FORD	1822804
FORD	1582282	FORD	1833586
FORD	1699368	FORD	2001717
FORD	1746588	FORD	2356115
FORD	1766722	FORD	2S61-1215-BC

KCR13009 Mis: 40x75x37

FORD	1133023		
FORD	1S7W-1215-AA		
FORD	4103363		
FORD	4563516		
JAGUAR	C2S8275		

KCR1333 Mis: 29x50,3x17,5

FORD	1019561	FORD	6170567
FORD	1137830	FORD	6189661
FORD	5020654	FORD	6199622
FORD	5020655	FORD	7220658
FORD	5030538	FORD	89FB-1238-AC

KCR14001 Mis: 38x70x37

HYUNDAI	51720-1C000	HYUNDAI	51720-29300
HYUNDAI	51720-25000	HYUNDAI	51720-29400
HYUNDAI	51720-25001	HYUNDAI/KIA	51720-02000
HYUNDAI	51720-29100		
HYUNDAI	51720-29150		

KCR14101 Mis: 42x76x39

HYUNDAI	52710-26500	KIA	0K552-33-047
HYUNDAI/KIA	51720-2J001	KIA	0K56B33047
HYUNDAI/KIA	52710-26510	KIA	50310-3E101
HYUNDAI/KIA	52710-26530	KIA	50310-3E102
HYUNDAI/KIA	52720-1F000	KIA	50310-3E200

KCR14102 Mis: 38x71x39

TOYOTA	90080-36108		
TOYOTA	90080-36178		
TOYOTA	90369-38021		
TOYOTA	90369-38022		

KCR19001 Mis: 25x55x43

MERCEDES-BENZ	1689810327		
NISSAN	43210-00QAD		
RENAULT	7703090365		

KCR19002 Mis: 45x84x39

MERCEDES-BENZ	1699810006		
MERCEDES-BENZ	1699810127		

KCR19003 Mis: 65/50x35/22x18.2/18.5

MERCEDES-BENZ	2033300051		
MERCEDES-BENZ	29803002		
MERCEDES-BENZ	29803102		

KCR19004 Mis: 50x92x51

MERCEDES-BENZ	6399810427		
MERCEDES-BENZ	A6399810427		

KCR19005 — Mis: 45x84x39

MERCEDES-BENZ	2109810127		
MERCEDES-BENZ	6389810027		

KCR20001 — Mis: 35x72x33

FIAT	55703172		
FIAT	71745046		
OPEL	55703172		
OPEL/VAUXHALL	1603337		
OPEL/VAUXHALL	93188889		

KCR20002 — Mis: 35x62x40

OPEL/VAUXHALL	4700322		
OPEL/VAUXHALL	9203934		

KCR20003 — Mis: 25x52x42

OPEL/VAUXHALL	4700323		
OPEL/VAUXHALL	9203935		

KCR20004 — Mis: 34x67x37

OPEL	93362342		
OPEL/VAUXHALL	328980		
OPEL/VAUXHALL	9195608		

KCR20005 — Mis: 45.3x80x48

NISSAN	43210-00Q0K		
NISSAN	43210-00QAB		
OPEL/VAUXHALL	4403044		
OPEL/VAUXHALL	9111044		
RENAULT	7701206742		

KCR20006 — Mis: 49x84x48

NISSAN	40210-00Q1F		
NISSAN	40210-00QAC		
OPEL/VAUXHALL	4403023		
OPEL/VAUXHALL	9111023		
RENAULT	7701206740		

KCR20007 — Mis: 45x86x39

NISSAN	40210-00Q0F	RENAULT	7701206847
NISSAN	40210-00QAE		
OPEL/VAUXHALL	4408668		
OPEL/VAUXHALL	91160086		
RENAULT	402106566R		

KCR20008 — Mis: 34x64x37

CHEVROLET	95983139	DAEWOO/OPEL/VAUXHALL	90279331
CHEVROLET/DAEWOO	94535249	HOLDEN	8-94151-213-0
CHEVROLET/DAEWOO	94536117	LADA	2108-3103020
DAEWOO	0926-34001	OPEL/VAUXHALL	1603192
DAEWOO	94535247	OPEL/VAUXHALL	328104

KCR20009 Mis: 49x84x48

OPEL/VAUXHALL	4501154		
OPEL/VAUXHALL	9161454		
RENAULT	7701205416		

KCR21001 Mis: 25x52x37

CITROEN	95592226	NISSAN	43210-AZ300
CITROEN	95608940	RENAULT	432108237R
CITROEN/PEUGEOT	3730.21	RENAULT	7701205812
DACIA	6001548986	RENAULT	7701208767
NISSAN	43210-AX000	RENAULT	7701465735

KCR21002 Mis: 35x65x35

DACIA	6001543344	RENAULT	7703090283
MAN	81934200352	RENAULT	7703090404
RENAULT	7701205778		
RENAULT	7701465181		
RENAULT	7703090251		

KCR21003 Mis: 42x77x39

RENAULT	7701207676		
RENAULT	7701210111		

KCR21004 Mis: 37x72x37

NISSAN	40210-00Q1D	RENAULT/DACIA	6001547696
NISSAN	40210-00QAA		
RENAULT	402102977R		
RENAULT	7701205779		
RENAULT	7701464049		

KCR21005 Mis: 45x88x39

NISSAN	40210-00Q0E	OPEL/VAUXHALL	4412598
NISSAN	40210-00QAG	OPEL/VAUXHALL	4430305
NISSAN	40210-00QAK	OPEL/VAUXHALL	93161059
OPEL	4451762	OPEL/VAUXHALL	93161376
OPEL	93198742	RENAULT	402109697R

KCR21006 Mis: 25x55x48

RENAULT	7701208059		

KCR21007 Mis: 39.9/50.3x17.5/29x13.9/14.2

ALFA ROMEO	11600.21408.00	ALFA ROMEO	60521282
ALFA ROMEO	11600.21413.03	BMW	31211110115
ALFA ROMEO	11600.21413.06	BMW	31212634104
ALFA ROMEO	510384	DAEWOO	2667886
ALFA ROMEO	510385	DAEWOO	94535209 + 94539210

KCR21008 Mis: 25x55x45

RENAULT	7701208058		
RENAULT	7701209504		

KCR21009 Mis: 25x52x37

RENAULT	7701463523		
RENAULT	7703090313		

KCR21010 Mis: 25x55x43

MERCEDES-BENZ	168 981 03 27	RENAULT	7703090365
NISSAN	43210-00Q0L		
NISSAN	43210-00QAD		
RENAULT	7701205596		
RENAULT	7701463987		

KCR21101 Mis: 37x72x37

MERCEDES-BENZ	4153340700	RENAULT	402101554R
NISSAN	40210-1HA19	RENAULT	402101HA1A
NISSAN	40210-1HA9D	RENAULT	402104249R
NISSAN	40210-AX000	RENAULT	402105733R
RENAULT	4021001HA9D	RENAULT/DACIA	6001550915

KCR21102 Mis: 42x80x39

RENAULT	402107049R		
RENAULT/DACIA	402108022R		

KCR21201 Mis: 17.46/26.99x39.88/50.29x14.64/14.73

DAEWOO	11055109	FORD	81AB-1238-AA
FORD	1492160	HYUNDAI	51720-11100
FORD	1565443	HYUNDAI	51720-11101
FORD	1583567	HYUNDAI	52730-36200
FORD	3026E-1200-A	ISUZU	8-94201-309-0

KCR21202 Mis: 35x68x48

NISSAN	43210-00Q0M		
NISSAN	43210-00QAC		
OPEL/VAUXHALL	4408277		
OPEL/VAUXHALL	91159917		
RENAULT	7701206849		

KCR21203 Mis: 41x68x17,5 / 45,2x77,8x19,8

FORD	1954435	NISSAN	40215-0F000
FORD	1954437	NISSAN	40215-2S600
NISSAN	40210-0F000	NISSAN	40215-50W00
NISSAN	40210-2S600		
NISSAN	40210-50W00		

KCR21301 Mis: 30x60x37

ALFA ROMEO/FIAT/LANCIA	5937306	LADA	2108-3104020-00
ALFA ROMEO/FIAT/LANCIA	5947834	SEAT	HB140302.02
ALFA ROMEO/FIAT/LANCIA	71746393		
FIAT/LANCIA	6556601326		
LADA	2108-3104020		

KCR21302 Mis: 34x64x37

LADA	2108-3103020		
VW	171407625 A		
VW	171407625C		

KIT RUOTA
WHEEL BEARING KITS
KITS ROULEMENTS ROUES
IMMAGINI – IMAGES – IMAGES

KCR21303 — Mis: 55x90x54

CITROEN/PEUGEOT	1606374680	OPEL/VAUXHALL	93197149
CITROEN/PEUGEOT	3326.71	RENAULT	402103708R
FIAT	51745702	RENAULT	402107435R
NISSAN	40210-00Q0H		
OPEL/VAUXHALL	4419183		

KCR24001 — Mis: 25x52x42

NISSAN	43210-4A00A		
SUZUKI	46860-80G00		
SUZUKI	46860M68K00		

KCR24002 — Mis: 45x84x39

FIAT	71742699		
SUZUKI	43440-79J00		
SUZUKI	43440-80J00		
SUZUKI	43440B77M00N		
SUZUKI	43440M55K00		

KCR25201 — Mis: 43.9x82.5x37.1

ALFA ROMEO/FIAT/LANCIA	1326188080	LAND ROVER/ROVER	GHK 1692
ALFA ROMEO/FIAT/LANCIA	71731547	LAND ROVER/ROVER	RUD 100150
ALFA ROMEO/FIAT/LANCIA	71752156		
LAND ROVER	LR041425		
LAND ROVER	RFC 000010		

KCR26001 — Mis: 38x69x34

CITROEN/PEUGEOT	6822.JL		
TOYOTA	90369-W0001		

KCR26002 — Mis: 40x75x38.9

DAIHATSU/TOYOTA	90363-W005		
TOYOTA	60401-00283		
TOYOTA	90363-40079		
TOYOTA	90363-T0023		
TOYOTA	90363-W0006		

KCR26003 — Mis: 40x74x42

TOYOTA	900363-40066	TOYOTA	90080-36137
TOYOTA	900363-T0015	TOYOTA	90080-36149
TOYOTA	900363-T0018	TOYOTA	90080-36176
TOYOTA	90080-36087		
TOYOTA	90080-36136		

KCR27001 — Mis: 35x66x37

AUDI/VW	191498625		
AUDI/VW/SEAT	6N0498625		

KCR27002 — Mis: 40x72x37

AUDI/SEAT/VW	357498625 B	VW	357407625 A
AUDI/VW	191498625 A	VW	357407625 E
AUDI/VW	331598625 A	VW	357498625 C
AUDI/VW	331598625 B		
AUDI/VW	357498625		

KIT RUOTA
WHEEL BEARING KITS
KITS ROULEMENTS ROUES
IMMAGINI – IMAGES – IMAGES

KCR27101 — Mis: 40x74x40

AUDI	1J0 498 625A	MAZDA	B455-33-047D
AUDI/SEAT/SKODA/VW	1J0 498 625	VW	1J0 407 625
AUDI/SEAT/SKODA/VW	1J0 598 625		
KIA	0K201 33047		
MAZDA	B455-33-047C		

KCR27102 — Mis: 39x75x37

AUDI	8D0598625 A	AUDI/VW	893498625 D
AUDI/SKODA/VW	4B0498625	AUDI/VW	8D0498625
AUDI/VW	893498625	VW	89340625
AUDI/VW	893498625 A	VW	89340625 C
AUDI/VW	893498625 B	VW	V 893407625 G

KCR27103 — Mis: 43x82x37

AUDI/SKODA/VW	4A0498625	AUDI/VW	4D0407625E
AUDI/VW	1D0498625B	AUDI/VW	893498625C
AUDI/VW	443498625A	AUDI/VW	893498625E
AUDI/VW	443498625F	AUDI/VW	8D0498625B
AUDI/VW	4B0498625A	VW	443407625F

KCR27201 — Mis: 43x80x38

FORD	1001719	FORD	6M21-1A040-AA
FORD	1104362	FORD	6M21-1A049-AA
FORD	1467387	FORD	7201008
FORD	1497388	FORD	95VW-1A049-AB
FORD	1K040 AA	FORD	95VW-1K040-AA

KCR528 — Mis: 17,4/29x39,9/50,3x13,8/14,2

ALFA ROMEO	11600.21408.00	ALFA ROMEO	60521282
ALFA ROMEO	11600.21413.03	BMW	31211110115
ALFA ROMEO	11600.21413.06	BMW	31212634104
ALFA ROMEO	510384	DAEWOO	2667886
ALFA ROMEO	510385	DAEWOO	94535209+94535210

KCR529 — Mis: 17,5/29x39.9/50,3x13,9/14,2

ALFA ROMEO	11600.21408.00	ALFA ROMEO	60521282
ALFA ROMEO	11600.21413.03	AUDI/VW	191 598 625
ALFA ROMEO	11600.21413.06	AUDI/VW	311 498 071 B5
ALFA ROMEO	510384	AUDI/VW	6U0 598 625
ALFA ROMEO	510385	BMW	31211110115

KCR687 — Mis: 35x60x18,4

FORD	1591389		
FORD	5007040		
FORD	81AB-1215-A		
FORD	81AB-1215-AB		

KCR941 — Mis: 19/31,8x45/59,1x15/16,7

ALFA ROMEO	11900.21408.01	FIAT	4096101
ALFA ROMEO	11900.21413.01	FIAT	4096104
ALFA ROMEO	60523333	FORD	1583567
BMW	31212634103	FORD	6077541
BMW	31212634106	FORD	6485024

KMR01001

BMW	31221139345		
BMW	31226757024		

KMR01101

MINI	31222318454		
MINI	31226756889		

KMR10001

CITROEN/PEUGEOT	3748.85		
TOYOTA	42450-0H010		

KMR11001

No image available

CHEVROLET	13502873		

KMR12001

ALFA ROMEO/FIAT	71769738	ALFA ROMEO/FIAT/LANCIA	71714471
ALFA ROMEO/FIAT/LANCIA	60816007	ALFA ROMEO/FIAT/LANCIA	71769737
ALFA ROMEO/FIAT/LANCIA	71377189	CITROEN	1619109880
ALFA ROMEO/FIAT/LANCIA	71377614	CITROEN/PEUGEOT	1606635380
ALFA ROMEO/FIAT/LANCIA	71714463	CITROEN/PEUGEOT	1606635580

KMR12002

FIAT	51787397		
FIAT	55701518		
FIAT	71747713		

KMR12003

ALFA ROME/FIAT/LANCIA	51759727	FIAT	71769492
ALFA ROME/FIAT/LANCIA	51965295		
ALFA ROMEO/FIAT	4655135		
ALFA ROMEO/FIAT/LANCIA	46554134		
FIAT	71753819		

KMR12004

ALFA ROMEO/FIAT/LANCIA	4399856	SEAT	RF149002.01
ALFA ROMEO/FIAT/LANCIA	5948422		
ALFA ROMEO/FIAT/LANCIA	7599461		
ALFA ROMEO/FIAT/LANCIA	7603485		
SEAT	HB149002.01		

KMR12005

ALFA ROMEO/FIAT/LANCIA	4400918		
ALFA ROMEO/FIAT/LANCIA	5890994		
ALFA ROMEO/FIAT/LANCIA	5963034		
ALFA ROMEO/FIAT/LANCIA	71747857		

KMR12006

No image available

FIAT	51748680	OPEL/VAUXHALL/SAAB	93175327
OPEL/VAUXHALL	1603143	OPEL/VAUXHALL/SAAB	93186387
OPEL/VAUXHALL	1603243	SAAB	12799815
OPEL/VAUXHALL	1603294		
OPEL/VAUXHALL	93171495		

KMR12007

CITROEN	1606374780		
CITROEN	3701.82		
FIAT	51754942		
FIAT	71753811		

KMR12009

No image available

ALFA ROMEO/FIAT	51754196		
FIAT	60656090		

KMR12101

FIAT	60652014		

KMR12102

ALFA ROMEO/FIAT/LANCIA	46453887	ALFA ROMEO/FIAT/LANCIA	71737613
ALFA ROMEO/FIAT/LANCIA	51754192	FIAT	71714476
ALFA ROMEO/FIAT/LANCIA	60812195	FIAT	71737612
ALFA ROMEO/FIAT/LANCIA	60815883	FIAT/LANCIA	60809985
ALFA ROMEO/FIAT/LANCIA	71714477		

KMR12103

ALFA ROMEO	50702890		
ALFA ROMEO	50707555		
ALFA ROMEO	71753815		

KMR12104

ALFA ROMEO	51757885		

KMR12105

ALFA ROMEO/FIAT/LANCIA	51813925		
ALFA ROMEO/FIAT/LANCIA	60652011		
ALFA ROMEO/FIAT/LANCIA	60671437		
ALFA ROMEO/LANCIA	71714478		

KMR12201

FIAT	5890994		
FIAT	71747857		
SEAT	028140301A		
SEAT	3981586		

KMR13001

FORD	1471852	FORD	1766628
FORD	1481197	FORD	3M51-2C299-RBC
FORD	1491957	FORD	7M51-2C299-AA
FORD	1506577	FORD	7M51-2C299-AB
FORD	1508112	FORD	7M51-2C299-AC

KMR13002

FORD	1516504	FORD	1778764
FORD	1534483	FORD	1896739
FORD	1547177	FORD	1899042
FORD	1675466	FORD	2126980
FORD	1699196	FORD	8V51-2C299-AB

KMR13003

FORD	1223640	FORD	1326487
FORD	1230907	FORD	1336139
FORD	1232245	FORD	1471854
FORD	1254308	FORD	3M51-2C300-CA
FORD	1308716	FORD	3M51-2C300-CB

KMR13004

No image available

FORD	1201300		
FORD	1C1J-K018-AA		
FORD	YC15 2B633 AE		
FORD	YC15 2B633 AF		

KMR19101

No image available

SMART	A4513300059		
SMART	A4513300159		

KMR20001

OPEL/VAUXHALL	1603254		
OPEL/VAUXHALL	93178652		
OPEL/VAUXHALL/GENERAL MOTORS	13110964		

KMR20002

No image available

OPEL/VAUXHALL	1604002	SAAB	4778494
OPEL/VAUXHALL	1604301	SAAB	4839122
OPEL/VAUXHALL	90510543	SAAB	5058185
OPEL/VAUXHALL	9119931		
SAAB	4398046		

KMR20003

No image available

OPEL/GEN.MOTORS/VAUXHALL	13123486		
OPEL/GEN.MOTORS/VAUXHALL	90538940		
OPEL/VAUXHALL	1603209		
OPEL/VAUXHALL	9117620		

KMR20004

No image available

OPEL/GEN.MOTORS/VAUXHALL	90538941		
OPEL/VAUXHALL	13123488		
OPEL/VAUXHALL	1603211		
OPEL/VAUXHALL	9117622		

KMR20005

No image available

FIAT	51749115		
OPEL/SAAB/VAUXHALL	24421906		
OPEL/SAAB/VAUXHALL	93170611		
OPEL/VAUXHALL	1604314		

KMR20006

GEN. MOTORS/OPEL/VAUXHALL	24463066		
OPEL/VAUXHALL	1604316		
OPEL/VAUXHALL	93178626		

KMR20007

OPEL	1603841		
OPEL/VAUXHALL	93188477		

KMR20008

CHEVROLET/OPEL/VAUXHALL	13580135		
OPEL	13507374		
OPEL/VAUXHALL	13502785		

KMR20009

CHEVROLET/OPEL/VAUXHALL	13502829		
CHEVROLET/OPEL/VAUXHALL	13583479		
OPEL	328001		
OPEL	328021		

KMR21301

NISSAN	40202-1KA0A	NISSAN	40202-JG01B
NISSAN	40202-3PU0A	RENAULT	40 20 225 60R
NISSAN	40202-BA60A	RENAULT	40 20 2JY 00A
NISSAN	40202-JG000		
NISSAN	40202-JG01A		

KMR21302

NISSAN	43202-4BA0A	RENAULT	402022933R
NISSAN	43202-4CE0A	RENAULT	43202JY00A
NISSAN	43202-JG000		
NISSAN	43202-JG01A		
NISSAN	43202-JG01B		

KMR26001

TOYOTA	42410-0D010		
TOYOTA	42410-0D030		
TOYOTA	42410-52020		
TOYOTA	42410-52021		

KMR26002

TOYOTA	42450-0D010		
TOYOTA	42450-0D030		
TOYOTA	42450-52020		
TOYOTA	42450-52021		

KMR26003

DAIHATSU/TOYOTA	42450-0D050	TOYOTA	42450-52061
TOYOTA	42450-0D051	TOYOTA	42450-52070
TOYOTA	42450-0D060	TOYOTA	42450-74020
TOYOTA	42450-0D080		
TOYOTA	42450-52060		

KIT RUOTA
WHEEL BEARING KITS
KITS ROULEMENTS ROUES
IMMAGINI – IMAGES – IMAGES

KMR27001

AUDI	8J0498625A	AUDI/SEAT/VW	5K0498621
AUDI	8X0498625	VW	L1KD407621
AUDI/SEAT/SKODA/VW	1T0498621		
AUDI/SEAT/SKODA/VW	3C0498621		
AUDI/SEAT/SKODA/VW	8J0598625		

KMR27002

AUDI	8V0598625A	AUDI/SEAT/VW	8V0598625
AUDI/SEAT	8V0498625B	AUDI/SEAY/SKODA/VW	8V0498625
AUDI/SEAT/SKODA/VW	1K0498621	AUDI/VW	8V0598625B
AUDI/SEAT/SKODA/VW	8V0598625C		
AUDI/SEAT/VW	5K0498621A		

KMR27003

No image available

AUDI/SEAT/SKODA/VW	8V0598611A		
AUDI/SEAT/VW	1K0598611		
AUDI/SKODA/VW	8V0598611		

KMR27004

No image available

AUDI	4D0407625D	AUDI/SEAT	8E0498625B
AUDI	4D0407625H		
AUDI	8D0498625C		
AUDI	8E0498625A		
AUDI	8E0598625B		

KMR27005

No image available

AUDI	8E0598611		
AUDI	8E0598611 A		
AUDI/SEAT	8E0598611 B		
AUDI/SEAT	8E0598611 C		

KMR27006

No image available

VW	7H0401611 D		
VW	7H0401611 E		
VW	7H0401611 H		
VW	7H0498611		
VW	7L0498611		

KMR27101

AUDI	4H0498625	AUDI	4H0498625F
AUDI	4H0498625A	AUDI	4S0598625
AUDI	4H0498625B	AUDI	8K0598625
AUDI	4H0498625D		
AUDI	4H0498625E		

KMR27102

AUDI/SEAT	6Q0407621AJ	SEAT/SKODA/VW	6C0407621
AUDI/SEAT/SKODA/VW	6R0407621A	SKODA/VW	6R0407621E
AUDI/SKODA	6Q0407621AH		
SEAT	6Q0407621AD		
SEAT/SKODA	6Q0407621BR		

KMR27103

AUDI	8X0598611		
AUDI/SEAT/SKODA/VW	6Q0598611		

KMR27201

AUDI/SEAT/SKODA/VW	1J0598477		

KMR27202

SEAT/VW	6X0598477		

KMR27301

No image available

AUDI	8S0598611	SEAT/SKODA/VW	3G0598611
AUDI/SEAT/SKODA/VW	1T0598611	SKODA/VW	3G0598611A
AUDI/SEAT/SKODA/VW	1T0598611B	VW	L1TD601611
AUDI/SEAT/SKODA/VW	5QF598611		
AUDI/SEAT/SKODA/VW	5WF501611A		

Coram®

by HPARTS
Automotive Solutions

CROCIERE TRIPODI AUTO E VEICOLI COMMERCIALI
Cross joints for cars and commercial vehicles

A112

MODELLO MODEL	DIMENSIONI DIMENSIONS	ANNO YEAR	RIF ORIGINALE ORIGINAL REF	RIF CORAM CORAM REF	NOTE NOTES
ELEGANT					
II SERIE	25X20		4247799	**CC001**	20 teeth
R82					
Tutti i tipi/All types/Tous types	29.2x20		5946475	**CC004**	20 teeth

ALFA

MODELLO MODEL	DIMENSIONI DIMENSIONS	ANNO YEAR	RIF ORIGINALE ORIGINAL REF	RIF CORAM CORAM REF	NOTE NOTES
145					
1.4 T.S. 16v Gamma 97 Vet. 3161888	32x22	97-98	46448513	**CC019**	22 teeth
1.4 T.S. 16v M.Y. 99	32x22	98-00	46448513	**CC019**	22 teeth
146					
1.4 T.S. 16v Gamma 97 Vet. 146134	32x22	97-98	46448513	**CC019**	22 teeth
1.4 T.S. 16v M.Y. 99	32x22	98-00	46448513	**CC019**	22 teeth
147					
1.9 JTD	43.2x26	01-ott	46308126	**CC038**	26 teeth
1.9 JTD 16V	43.2x26	02-ott	46308126	**CC038**	26 teeth
1.9 JTDM - 1.9 JTDM 16V	43.2x26	04-ott	46308126	**CC038**	26 teeth
1.9 JTDM 8V	43.2x26	05-ott	46308126	**CC038**	26 teeth
156					
1.9 JTD	43.2x26	01-mag	46308126	**CC038**	26 teeth
1.9 JTD 16V	43.2x26	02-mag	46308126	**CC038**	26 teeth
2.4 JTD	43.2x26	03-mag	46308126	**CC038**	26 teeth
156 Sportwagon					
1.9 JTD	43.2x26	01-giu	46308126	**CC038**	26 teeth
1.9 JTD 16V	43.2x26	02-giu	46308126	**CC038**	26 teeth
1.9 JTD 16V Q4	43.2x26	04-giu	46308126	**CC038**	26 teeth
159					
1.8 MPI	41.53x24	07-nov	46308281	**CC039**	24 teeth
1.8 TBI	41.53x24	09-nov	46308281	**CC039**	24 teeth
1.9 JTDM 16V	43.2x26	05-nov	46308126	**CC038**	26 teeth
2.4 JTDM - 2.4 JTDM Q4	43.2x26	07-nov	46308126	**CC038**	26 teeth

follow ALFA

MODELLO MODEL	DIMENSIONI DIMENSIONS	ANNO YEAR	RIF ORIGINALE ORIGINAL REF	RIF CORAM CORAM REF	NOTE NOTES
159 Sportwagon					
1.8 MPI	41.53x24	07-nov	46308281	**CC039**	24 teeth
1.8 TBI	41.53x24	09-nov	46308281	**CC039**	24 teeth
1.9 JTDM 16V - 1.9 JTDM 8V	43.2x26	06-nov	46308126	**CC038**	26 teeth
2.4 JTDM - 2.4 JTDM Q4	43.2x26	07-nov	46308126	**CC038**	26 teeth
166					
2.4 JTD	43.2x26	03-lug	46308126	**CC038**	26 teeth
BRERA					
2.2 JTS	43.2x26	06->	46308126	**CC038**	26 teeth
3.2 JTS	43.2x26	08->	46308126	**CC038**	26 teeth
3.2 JTS Q4	43.2x26	06->	46308126	**CC038**	26 teeth
GIULIETTA					
1.4 TB - 1.6 JTDM	43.2x26	10->	46308126	**CC038**	26 teeth
GT					
1.9 JTD	43.2x26	03-ott	46308126	**CC038**	26 teeth
MITO					
1.4 Turbo MultiAir	43.2x26	09->	46308126	**CC038**	26 teeth
SPIDER					
2.2 JTS	43.2x26	06->	46308126	**CC038**	26 teeth
3.2 JTS	43.2x26	08->	46308126	**CC038**	26 teeth
3.2 JTS	43.2x26	06->	46308126	**CC038**	26 teeth

AUTOBIANCHI

MODELLO MODEL	DIMENSIONI DIMENSIONS	ANNO YEAR	RIF ORIGINALE ORIGINAL REF	RIF CORAM CORAM REF	NOTE NOTES
A112					
Elegant - II Serie	25x20		4247799	**CC001**	20 teeth
Y10					
Tutti i tipi/All types/Tous types	29.2x20	-> 10 / 85	5946475	**CC004**	20 teeth
Tutti i tipi/All types/Tous types	29x19	11 / 85 ->	7540062	**CC006**	19 teeth

CHEVROLET

MODELLO MODEL	DIMENSIONI DIMENSIONS	ANNO YEAR	RIF ORIGINALE ORIGINAL REF	RIF CORAM CORAM REF	NOTE NOTES
BUICK CENTURY					
Tutti i tipi/All types/Tous types	36.99x32		(ETMA) TR 1160	**CC017**	32 teeth

CHEVY

MODELLO MODEL	DIMENSIONI DIMENSIONS	ANNO YEAR	RIF ORIGINALE ORIGINAL REF	RIF CORAM CORAM REF	NOTE NOTES
Tutti i tipi/All types/Tous types	29.93x28	96-98	(ETMA) TR 1188	**CC014**	28 teeth

CHRYSLER

MODELLO MODEL	DIMENSIONI DIMENSIONS	ANNO YEAR	RIF ORIGINALE ORIGINAL REF	RIF CORAM CORAM REF	NOTE NOTES
CARAVAN					
Tutti i tipi/All types/Tous types	29.95x30	83-95	(ETMA) TR 1101	**CC023**	30 teeth
NEON					
Tutti i tipi/All types/Tous types	29.93x28		(ETMA) TR 1188	**CC014**	28 teeth

DAEWOO

MODELLO MODEL	DIMENSIONI DIMENSIONS	ANNO YEAR	RIF ORIGINALE ORIGINAL REF	RIF CORAM CORAM REF	NOTE NOTES
MATIZ					
Tutti i tipi/All types/Tous types	27.77x19		44103-781300	**CC024**	19 teeth
TICO					
Tutti i tipi/All types/Tous types	27.77x19		44103-781300	**CC024**	19 teeth

DODGE

MODELLO MODEL	DIMENSIONI DIMENSIONS	ANNO YEAR	RIF ORIGINALE ORIGINAL REF	RIF CORAM CORAM REF	NOTE NOTES
DAKOTA					
Tutti i tipi/All types/Tous types	29.95x30	83-95	(ETMA) TR 1101	**CC023**	30 teeth
NEON					
Tutti i tipi/All types/Tous types	29.93x28		(ETMA) TR 1188	**CC014**	28 teeth

FIAT					
MODELLO MODEL	**DIMENSIONI DIMENSIONS**	**ANNO YEAR**	**RIF ORIGINALE ORIGINAL REF**	**RIF CORAM CORAM REF**	**NOTE NOTES**
127					
1050 cc	29x19		7540062	**CC006**	19 teeth
Panorama R82 BZ/DS t. 906775	28x20		7508720	**CC007**	20 teeth
Tutti i tipi	25x20		4314781	**CC001**	20 teeth
U.T.	29.2x20		5946475	**CC004**	20 teeth
128					
Tutti i tipi	28x20		4247393	**CC002**	20 teeth
500					
1.2	29.2x20		46308007	**CC037**	20 teeth
1.3 D Multijet	33.9x23	09->	46308327	**CC042**	23 teeth
500 C					
1.3 D Multijet	33.9x23	09->	46308327	**CC042**	23 teeth
BRAVA/BRAVO					
1.2 16v G98	32x20	98-00	7702195	**CC018**	20 teeth
1.6 16v G.98	32x22	98-00	46448513	**CC019**	22 teeth
1370 SPI 12v 75cv/80cv	32x20	95-98	7702195	**CC018**	20 teeth
1370 SPI 12v 80cv Vet. 4064492	32x22	95-98	46448513	**CC019**	22 teeth
1580 MPI 16v	32x20	95->	7702195	**CC018**	20 teeth
1580 MPI 16v 90cv/103cv Vet. 4064492	32x22	95-98	46448513	**CC019**	22 teeth
1930 DS	32x20	95-98	7702195	**CC018**	20 teeth
BRAVO II					
1.4 T-Jet	43.2x26	07->	46308126	**CC038**	26 teeth
1.6 D Multijet	43.2x26	08->	46308126	**CC038**	26 teeth
1.9 D Multijet	43.2x26	07->	46308126	**CC038**	26 teeth
CINQUECENTO					
1108 SPI	29x19	92-98	7540062	**CC006**	19 teeth
899/903 CARB./SPI	29x19	92-98	7540062	**CC006**	19 teeth
CROMA					
1.9 D Multijet - 2.4 D Multijet	43.2x26	05->	46308126	**CC038**	26 teeth

follow FIAT

MODELLO MODEL	DIMENSIONI DIMENSIONS	ANNO YEAR	RIF ORIGINALE ORIGINAL REF	RIF CORAM CORAM REF	NOTE NOTES
DOBLO'					
1.2 (223AXA1A)	31.93x21	01->	46304552	**CC025**	21 teeth
1.2 8V MY.2004	31.93x21	04->	46304552	**CC025**	21 teeth
1.3 JTD 16v MY.2004	35.5x24	04->	46307676	**CC026**	21 teeth
1.6 16V (223AXD1A)	31.93x21	01->	46307552	**CC025**	21 teeth
1.6 16V Bipower MY.2004	31.93x21	04->	46307552	**CC025**	21 teeth
1.6 16V MY.2004	31.93x21	04->	46307552	**CC025**	21 teeth
1.9 D (223AXB1A)	31.93x21	01->	46307552	**CC025**	21 teeth
1.9 DS	31.93x21	00->	46307552	**CC025**	21 teeth
1.9 DS ASP MY.2004	31.93x21	04->	46307552	**CC025**	21 teeth
1.9 JTD	35.5x24	03->	46307676	**CC026**	24 teeth
1.9 JTD (223AXE1A)	35.5x24	01->	46307676	**CC026**	24 teeth
1.9 JTD MY.2004	35.5x24	04->	46307676	**CC026**	24 teeth
1242 MPI 8V	31.93x21	00->	46304552	**CC025**	21 teeth
1596 16V	31.93x21	00->	46307552	**CC025**	21 teeth
1910 JTD	35.5x24	00->	46307676	**CC026**	24 teeth
DOBLO' Cargo					
1.9 JTD	35.5x24	03->	46307676	**CC026**	24 teeth
1.9 JTD (223ZXE1A)	35.5x24	01->	46307676	**CC026**	24 teeth
DOBLO' Combi					
1.4 Natural Power - 1.6 D Multijet	43.2x26	10->	46308126	**CC038**	26 teeth
DOBLO' Furgonato					
1.6 D Multijet	43.2x26	10->	46308126	**CC038**	26 teeth
1.6 D Multijet	41.53x24	10->	46308281	**CC039**	24 teeth
DUCATO Autobus					
1.9 D - 1.9 TD - 2.8 D	38,8x29	98-02	1400785680	**CC045**	39 teeth
1.9 D Combinato	38,8x29	95-02	1400785680	**CC045**	39 teeth
1.9 TD Combinato - 1.9 TD Combinato/Panorama	38,8x29	94-02	1400785680	**CC045**	39 teeth
2.0 4x4	38,8x29	94-01	1400785680	**CC045**	39 teeth
2.0 JTD	38,8x29	01->	1400785680	**CC045**	39 teeth
2.0 Panorama/Combinato - 2.5 D Combinato	38,8x29	94-02	1400785680	**CC045**	39 teeth
2.3 JTD	38,8x29	02->	1400785680	**CC045**	39 teeth
2.5 TDI 4x4 - 2.8 TDI	38,8x29	97-02	1400785680	**CC045**	39 teeth
2.5 TDI Panorama/Combinato	38,8x29	94-02	1400785680	**CC045**	39 teeth
2.8 JTD	38,8x29	00-06	1400785680	**CC045**	39 teeth
2.8 JTD 4x4	38,8x29	00-02	1400785680	**CC045**	39 teeth
2.8 TDI 4x4	38,8x29	99-02	1400785680	**CC045**	39 teeth

follow FIAT

MODELLO MODEL	DIMENSIONI DIMENSIONS	ANNO YEAR	RIF ORIGINALE ORIGINAL REF	RIF CORAM CORAM REF	NOTE NOTES
DUNA					
Tutti i tipi/All types/Tous types	31.93x20		5949990R	**CC009**	20 teeth
Duna	32x20	86-90	7702195	**CC018**	20 teeth
Tutti i tipi	31.93x20		5949990	**CC005**	20 teeth
ELBA					
Elba CSL	32x20	91-96	7702195	**CC018**	20 teeth
FIORINO					
1301 CARB. RL / 1372 SPI RL /1530 SPI RL	32x20	93-01	7702195	**CC018**	20 teeth
1697 DS RL	32x20	93-01	7702195	**CC018**	20 teeth
1697TB/DS RL	32x22	93-01	46448513	**CC019**	22 teeth
Fiorino	32x20	88-93	7702195	**CC018**	20 teeth
Pick up BZ/DS t.896388	28x20	93->	7508720	**CC007**	20 teeth
FIORINO Cassone					
1.3 D Multijet	33.9x23	07->	46308327	**CC042**	23 teeth
1.4	32x22	07->	46308047	**CC041**	22 teeth
GRANDE PUNTO					
1.2 - 1.3 D Multijet - 1.9 D Multijet	32x27	05->	51733783	**CC043**	27 teeth
1.3 D Multijet	33.9x23	05-ott	46308327	**CC042**	23 teeth
1.4	32x27	mag-15	51733783	**CC043**	27 teeth
1.4 16V	32x27	05-nov	51733783	**CC043**	27 teeth
1.4 LPG - 1.4 Natural Power - 1.6 D Multijet	32x27	08->	51733783	**CC043**	27 teeth
1.4 T-Jet	32x27	07->	51733783	**CC043**	27 teeth
IDEA					
1.2 16V	31.93x21	04->	46307552	**CC025**	21 teeth
1.3 D Multijet	33.9x23	04->	46308327	**CC042**	23 teeth
1.4 16V	31.93x21	04->	46307552	**CC025**	21 teeth
1.9 JTD	35.5x24	04->	46307676	**CC026**	24 teeth
1910 JTD	35.5x24	04->	46307676	**CC026**	24 teeth

follow FIAT

MODELLO MODEL	DIMENSIONI DIMENSIONS	ANNO YEAR	RIF ORIGINALE ORIGINAL REF	RIF CORAM CORAM REF	NOTE NOTES
MAREA					
1.2 16v Gamma 99	32x22	99-02	46448513	**CC019**	22 teeth
1.6 Bipower Gamma 99/ 16v	32x22	99-02	46448513	**CC019**	22 teeth
1.9 TD 75 - 1.9 TD 100	39.3x30	96-02	46307152	**CC044**	30 theeth
1370 12v 80cv 59KW Vet. 0176271/0180746/5054833	32x20	96-99	7702195	**CC018**	20 teeth
1370 12v 80cv 59KW Vet. 0176272/0180747/5054834	32x22	96-99	46448513	**CC019**	22 teeth
1580 16v 103cv 75KW / Bipower	32x22	96-99	46448513	**CC019**	22 teeth
2.0 155 20V	39.3x30	99-01	46307152	**CC044**	30 theeth
MILLE					
1.0 SPI/ 1697 DS	32x20	94-95	7702195	**CC018**	20 teeth
994 SPI Clip/ 1372 SPI Clip/ 1697 DS Clip	32x20	95-97	7702195	**CC018**	20 teeth
MULTIPLA					
1.6 16v	32x22	98-00	46448513	**CC019**	22 teeth
1580 16v / Bipower/Blupower / 1596 16v BZ/GLP/MET	32x22	98-00	46448513	**CC019**	22 teeth
NUOVA PANDA					
45	29.2x20		5946475	**CC004**	20 teeth
NUOVA RITMO					
Tutti i tipi	31.93x20		5949990	**CC005**	20 teeth
Tutti i tipi	31.93x20		5949990R	**CC009**	20 teeth
Tutti i tipi	32x20		7702195	**CC018**	20 teeth
Tutti i tipi	32x20		7702195	**CC018**	20 teeth

follow FIAT

MODELLO MODEL	DIMENSIONI DIMENSIONS	ANNO YEAR	RIF ORIGINALE ORIGINAL REF	RIF CORAM CORAM REF	NOTE NOTES
PALIO					
1.0	32x27	96-03	51733783	**CC043**	27 teeth
1.2	32x27	97-02	51733783	**CC043**	27 teeth
1.4 - 1.6 16V	32x27	96-02	51733783	**CC043**	27 teeth
1.4 Cat	32x27	96-01	51733783	**CC043**	27 teeth
1.9 DS 2v Extra Europa Rest. 2002	32x22	97-01	46448513	**CC019**	22 teeth
1108 CARB. 2V Extra Europa	32x22	99-01	46448513	**CC019**	22 teeth
1108 CARB. 2V Extra Europa	32x20	97-99	7702195	**CC018**	20 teeth
1242 16v Weekend/Europa /Extra Europa Rest. 2002	32x22	02->	46448513	**CC019**	22 teeth
1242 8v 2v Extra Europa Rest. 2002	32x20	02->	7702195	**CC018**	20 teeth
1242 8v/16v 2v Extra Europa Rest. 2002	32x22	02->	46448513	**CC019**	22 teeth
1242 Berlina Weekend Europa/1.2 SW Week.Europa	32x22	99-01	46448513	**CC019**	22 teeth
1242 Berlina Weekend Europa/1242 MPI 8v 2v	32x20	97-01	7702195	**CC018**	20 teeth
1242 Berlina/SW Weekend Europa/MPI 2v EE	32x22	97-01	46448513	**CC019**	22 teeth
1242 MPI 2v Extra Europa	32x20	97-00	7702195	**CC018**	20 teeth
1242 MPI 8v 2v Extra Europa	32x22	97-01	46448513	**CC019**	22 teeth
1242 MPI 8v Weekend Europa/ 2v Extra Europa	32x20	02->	7702195	**CC018**	20 teeth
1242 SW Weekend Europa Vet. 6238336	32x20	97-99	7702195	**CC018**	20 teeth
1242 Weekend Extra Europa	32x22	97-01	46448513	**CC019**	22 teeth
1372 SPI 2V Extra Europa/ Weekend Extra Europa	32x20	97-99	7702195	**CC018**	20 teeth
1372 SPI 2v Extra Europa/Turchia	32x22	99-01	46448513	**CC019**	22 teeth
1372 SPI Weekend Extra Europa/Polonia	32x20	97-01	7702195	**CC018**	20 teeth
1372 SPI Weekend Extra Europa/Turchia	32x22	99-01	46448513	**CC019**	22 teeth
1461 MPI 2v Weekend/Extra Europa Rest 2002	32x22	02->	46448513	**CC019**	22 teeth
1580 MPI 16v/ 2v Weekend/Extra Europa/SW	32x22	97-01	46448513	**CC019**	22 teeth
1596 16v Weekend Europa Rest.02	32x22	02->	46448513	**CC019**	22 teeth
1596 MPI 16v Weekend EE/ 16v 2v EE/ SW week.E.	32x22	01->	46448513	**CC019**	22 teeth
1697 DS 2v Extra Europa	32x22	97-99	46448513	**CC019**	22 teeth
1697 TDS SW Weekend Europa/WEE 46/51/53KW	32x22	01->	46448513	**CC019**	22 teeth
1910 DS 2v Extra Europa Rest. 2002	32x22	02->	46448513	**CC019**	22 teeth
1910 DS Weekend Europa Rest. 2002	32x22	02->	46448513	**CC019**	22 teeth
994 MPI 2V Extra Europa	32x20	97-01	7702195	**CC018**	20 teeth
Weekend 1.9 JTD	39.3x30	01->	46307152	**CC044**	30 theeth

follow FIAT

MODELLO MODEL	DIMENSIONI DIMENSIONS	ANNO YEAR	RIF ORIGINALE ORIGINAL REF	RIF CORAM CORAM REF	NOTE NOTES
PANDA					
0.9	29.2x20	12->	46308007	**CC037**	20 teeth
1.1 - 1.2	29.2x20	03->	46308007	**CC037**	20 teeth
1.1 - 1.2 - 1.3 D Multijet	32x22	03->	46308047	**CC041**	22 teeth
1.2 - 1.2 4x4 - 1.3 JTD Multijet 4x4	32x22	ott-13	46308047	**CC041**	22 teeth
1.2 4x4	32x22	ott-13	46308047	**CC041**	22 teeth
1.2 Bi-Power - 1.2 Natural Power	29.2x20	07-set	46308007	**CC037**	20 teeth
1.3 16V	31.93x21	03->	46307552	**CC025**	21 teeth
1.3 D Multijet	33.9x23	12->	46308327	**CC042**	23 teeth
1.3 JTD	31.93x21	03->	46307552	**CC025**	21 teeth
45	25x20		4314781	**CC001**	20 teeth
4x2 RL/86 Vet. 5357713	29.2x20	86-91	5946475	**CC004**	20 teeth
4x2 RL/86 Vet. 5357714	29x19	86-91	7540062	**CC006**	19 teeth
4x2/4x4 MAQ. 91	29x19	91-03	7540062	**CC006**	19 teeth
4x4 R/86 Vet. 5357713	29.2x20	86-91	5946475	**CC004**	20 teeth
4x4 R/86 Vet. 5357714	29x19	86-91	7540062	**CC006**	19 teeth
750-1000	29x19		7540062	**CC006**	19 teeth
DS	29x19	86-93	7540062	**CC006**	19 teeth
PANDA Cassone					
1.1 - 1.2 - 1.2 4x4 - 1.3 D Multijet	32x22	04->	46308047	**CC041**	22 teeth
1.3 D Multijet 4x4	32x22	06->	46308047	**CC041**	22 teeth
PANDA VAN					
1.3 D Multijet	33.9x23	12->	46308327	**CC042**	23 teeth

follow FIAT

MODELLO MODEL	DIMENSIONI DIMENSIONS	ANNO YEAR	RIF ORIGINALE ORIGINAL REF	RIF CORAM CORAM REF	NOTE NOTES
PUNTO					
1.1 SPI / 1.2 SPI /55-60-75-90	29x19	93-97	7540062	**CC006**	19 teeth
1.2 16V 80 (188.233,.235,.253,.255,.333,.353,.639)	31.93x21	99->	46307552	**CC025**	21 teeth
1.2 60	31.93x21	94-99	46307552	**CC025**	21 teeth
1.2 60	32x27	99-10	51733783	**CC043**	27 teeth
1.2 60 (188.030,.050,.130,.150,.230,.250)	31.93x21	99->	46307552	**CC025**	21 teeth
1.2 75	31.93x21	94-99	46307552	**CC025**	21 teeth
1.2 85 16V	31.93x21	97-99	46307552	**CC025**	21 teeth
1.2 8V-16V	31.93x21	99-03	46307552	**CC025**	21 teeth
1.2 Bifuel	32x27	07-dic	51733783	**CC043**	27 teeth
1.2 16V 80	32x27	99-06	51733783	**CC043**	27 teeth
1.2 MPI 55-60-75-90	32x20	93-97	7702195	**CC018**	20 teeth
1.2 Natural Power	31.93x21	03->	46307552	**CC025**	21 teeth
1.3 D Multijet	33.9x23	12->	46308327	**CC042**	23 teeth
1.3 JTD 16V	39.3x30	03-dic	46307152	**CC044**	30 theeth
1.4	31.93x21	03->	46307552	**CC025**	21 teeth
1.4 16V FL.'03	31.93x21	03->	46307552	**CC025**	21 teeth
1.8 130 HGT - 1.9 JTD 80	39.3x30	99-12	46307152	**CC044**	30 theeth
1.9 DS	31.93x21	99-03	46307552	**CC025**	21 teeth
1.9 DS 60 (188.031,.051,.231,.251)	31.93x21	99->	46307552	**CC025**	21 teeth
1.9 JTD	35.5x24	03->	46307676	**CC026**	24 teeth
1.9 JTD	39.3x30	01-dic	46307152	**CC044**	30 theeth
1108 SPI Gamma 97	29x19	97-99	7540062	**CC006**	19 teeth
1242 8V BZ/MET	31.93x21	99-03	46307552	**CC025**	21 teeth
1242 8V-16V FL.'03	31.93x21	03->	46307552	**CC025**	21 teeth
1242 MPI 8v/16v Gamma 97/ Cabio Gamma 97	32x20	97-99	7702195	**CC018**	20 teeth
1242 SPI Cabrio	29x19	93-97	7540062	**CC006**	19 teeth
1242 SPI Gamma 97/ Cabrio Gamma 97	29x19	97-99	7540062	**CC006**	19 teeth
1580 MPI Cabrio/ 1.6 MPI 55-60-75-90/ 1697 DS	32x20	93-97	7702195	**CC018**	20 teeth
1697 DS Gamma 97	32x20	97-99	7702195	**CC018**	20 teeth
1697 TDS 63cv	32x22	93-97	46448513	**CC019**	22 teeth
1910 JTD	35.5x24	03->	46307676	**CC026**	24 teeth
PUNTO Cabriolet					
1.2 60	31.93x21	94-00	46307552	**CC025**	21 teeth
1.2 85 16V	31.93x21	97-00	46307552	**CC025**	21 teeth
PUNTO Cassone					
1.2 60	32x27	00-09	51733783	**CC043**	27 teeth
1.3 D Multijet	33.9x23	08->	46308327	**CC042**	23 teeth

follow FIAT					
MODELLO MODEL	**DIMENSIONI DIMENSIONS**	**ANNO YEAR**	**RIF ORIGINALE ORIGINAL REF**	**RIF CORAM CORAM REF**	**NOTE NOTES**
PUNTO EVO					
1.3 D Multijet	33.9x23	09-dic	46308327	**CC042**	23 teeth
PUNTO EVO Cassone					
1.3 D Multijet	33.9x23	09-dic	46308327	**CC042**	23 teeth
QUBO					
1.3 D Multijet	32x22	08->	46308047	**CC041**	22 teeth
1.3 D Multijet	33.9x23	08->	46308327	**CC042**	23 teeth
1.4 Natural Power	32x22	08->	46308047	**CC041**	22 teeth
REGATA					
Tutti i tipi	31.93x20		5949990	**CC005**	20 teeth
Tutti i tipi	31.93x20		5949990R	**CC009**	20 teeth
Tutti i tipi	32x20		7702195	**CC018**	20 teeth
RITMO					
Tutti i tipi	28x20		4247393	**CC002**	20 teeth
SCUDO Autobus					
1.6 - 1.9 D	33x34	96-06	1497191088	**CC040**	34 teeth
1.6 D Multijet	33x34	07->	1497191088	**CC040**	34 teeth
1.9 TD	38,8x29	96-06	1400785680	**CC045**	39 teeth
2.0 16V	33x34	00-06	1497191088	**CC040**	34 teeth
2.0 JTD	33x34	04-giu	1497191088	**CC040**	34 teeth
2.0 JTD	38,8x29	99-06	1400785680	**CC045**	39 teeth
SCUDO Furgonato					
1.6 - 1.9 D	33x34	96-06	1497191088	**CC040**	34 teeth
1.6 D Multijet	33x34	07->	1497191088	**CC040**	34 teeth
1.9 TD	38,8x29	96-06	1400785680	**CC045**	39 teeth
2.0 16V	33x34	00-06	1497191088	**CC040**	34 teeth
2.0 D Multijet	38,8x29	07->	1400785680	**CC045**	39 teeth
2.0 JTD	33x34	04-giu	1497191088	**CC040**	34 teeth
2.0 JTD	38,8x29	99-06	1400785680	**CC045**	39 teeth
SCUDO Pianale piatto					
1.6 D Multijet	33x34	07->	1497191088	**CC040**	34 teeth

follow FIAT

MODELLO MODEL	DIMENSIONI DIMENSIONS	ANNO YEAR	RIF ORIGINALE ORIGINAL REF	RIF CORAM CORAM REF	NOTE NOTES
SEICENTO					
899 SPI / 1108 MPI/SPI	29x19	98->	7540062	**CC006**	19 teeth
SIENA					
1242 MPI 8v /16v Extra Europa Rest.2002	32x22	02->	46448513	**CC019**	22 teeth
1242 MPI 8v Extra Europa Rest.2002	32x20	02->	7702195	**CC018**	20 teeth
1242 MPI Extra Europa	32x20	97-01	7702195	**CC018**	20 teeth
1242 MPI Extra Europa	32x22	97-01	46448513	**CC019**	22 teeth
1372 SPI Extra Europa	32x22	99-01	46448513	**CC019**	22 teeth
1372 SPI Extra Europa/ Polonia	32x20	97-01	7702195	**CC018**	20 teeth
1461 MPI Extra Europa Rest 2002	32x22	02->	46448513	**CC019**	22 teeth
1580 MPI 16v Extra Europa	32x22	97-01	46448513	**CC019**	22 teeth
1580 MPI 16v Extra Europa	32x20	97-01	7702195	**CC018**	20 teeth
1596 16v Extra Europa	32x22	99-01	46448513	**CC019**	22 teeth
1596 16v Extra Europa Rest.2002	32x22	02->	46448513	**CC019**	22 teeth
1697 DS/TDS Extra Europa	32x22	97-01	46448513	**CC019**	22 teeth
1910 DS Extra Europa Rest. 2002	32x22	02->	46448513	**CC019**	22 teeth
STILO					
1.2 16V (192_XA1B)	31.93x21	02->	46307552	**CC025**	21 teeth
1.4 16V	31.93x21	04->	46307552	**CC025**	21 teeth
1.4 16V F.L.L.2003	31.93x21	03->	46307552	**CC025**	21 teeth
1.6 16V (192_XB1A)	31.93x21	01->	46307552	**CC025**	21 teeth
1.6 16V F.L.L.2003	31.93x21	03->	46307552	**CC025**	21 teeth
1.9 JTD (192_XE1A)	35.5x24	01->	46307676	**CC026**	24 teeth
1.9 JTD F.L.L.2003	35.5x24	03->	46307676	**CC026**	24 teeth
STILO MultiWagon					
1.4 16V	31.93x21	04->	46307552	**CC025**	21 teeth
1.6 16V	31.93x21	03->	46307552	**CC025**	21 teeth
1.9 D Multijet	43.2x26	05-ago	46308126	**CC038**	26 teeth
1.9 JTD	35.5x24	03->	46307676	**CC026**	24 teeth
STRADA					
1242/ MPI 8v	32x22	99->	46448513	**CC019**	22 teeth
1697 TDS/ 1.9 DS	32x22	99->	46448513	**CC019**	22 teeth
STRADA Pick-up					
1.3 D Multijet	39.3x30	06->	46307152	**CC044**	30 teeth
1.9 JTD	39.3x30	03->	46307152	**CC044**	30 teeth

follow FIAT

MODELLO MODEL	DIMENSIONI DIMENSIONS	ANNO YEAR	RIF ORIGINALE ORIGINAL REF	RIF CORAM CORAM REF	NOTE NOTES
TEMPRA					
1370-1580/1930 Aspirato D-TD	32x20	90-93	7702195	**CC018**	20 teeth
1372 Carb./ SPI Maq.93/ 1580 Carb/MPI/SPI	32x20	93-96	7702195	**CC018**	20 teeth
1930 Aspirato MQ. 93 D.TD	32x20	93-96	7702195	**CC018**	20 teeth
TIPO					
1100-1370-1580/ 1697 D/TDS/ 1930 Aspirato D/TDS	32x20	88-93	7702195	**CC018**	20 teeth
1108 SPI MQ93/1372 Carb/SPI MQ93/1580	32x20	93-95	7702195	**CC018**	20 teeth
1697 Maq. 93 D/TD/ 1930	32x20	93-95	7702195	**CC018**	20 teeth
ULYSSE					
1.8	33x34	97-02	1497191088	**CC040**	34 teeth
1.8	38,8x29	97-02	1400785680	**CC045**	39 teeth
1.9 TD	38,8x29	95-02	1400785680	**CC045**	39 teeth
2.0	33x34	94-02	1497191088	**CC040**	34 teeth
2.0 - 2.0 Turbo	38,8x29	94-02	1400785680	**CC045**	39 teeth
2.0 16V	33x34	98-02	1497191088	**CC040**	34 teeth
2.0 16V	38,8x29	98-02	1400785680	**CC045**	39 teeth
2.0 JTD - 2.0 JTD 16V	38,8x29	99-02	1400785680	**CC045**	39 teeth
2.1 TD	38,8x29	96-99	1400785680	**CC045**	39 teeth
2.2 JTD	38,8x29	02-giu	1400785680	**CC045**	39 teeth
2.2 JTD	38,8x29	08-nov	1400785680	**CC045**	39 teeth

follow FIAT

MODELLO MODEL	DIMENSIONI DIMENSIONS	ANNO YEAR	RIF ORIGINALE ORIGINAL REF	RIF CORAM CORAM REF	NOTE NOTES
UNO					
1.0 Carb. Mondo/ 1.0 Mondo	32x20	98->	7702195	**CC018**	20 teeth
1.0 R/89	29x19	89-95	7540062	**CC006**	19 teeth
1.1 Carb. Mondo t. 1390775	29x19	98-02	7540062	**CC006**	19 teeth
1.1 Carb. Mondo t. 1390776	32x20	02->	7702195	**CC018**	20 teeth
1.1 R/89 49cv	29x19	89-95	7540062	**CC006**	19 teeth
1.3 Aspirato Diesel R/89	29x19	89-95	7540062	**CC006**	19 teeth
1.5 SPI R/89	29x19	93-95	7540062	**CC006**	19 teeth
1.5 SPI R/89	32x20	89-92	7702195	**CC018**	20 teeth
1108/1116 R/89	29x19	89-95	7540062	**CC006**	19 teeth
1242 SPI Mondo	32x20	98->	7702195	**CC018**	20 teeth
1367 Turbo Diesel R/89	32x20	89-95	7702195	**CC018**	20 teeth
1370 Carb. Mondo	32x20	98->	7702195	**CC018**	20 teeth
1370 Carb./SPI R/89	32x20	98->	7702195	**CC018**	20 teeth
1370 SPI R/89	29x19	93-95	7540062	**CC006**	19 teeth
1697 Aspirato Diesel R/89	32x20	89-95	7702195	**CC018**	20 teeth
1697 DS Mondo	32x20	98->	7702195	**CC018**	20 teeth
1930 Aspirato Diesel R/89	32x20	89-95	7702195	**CC018**	20 teeth
903 R/89 / 994 Carb. R/89	29x19	89-95	7540062	**CC006**	19 teeth
994 SPI R/89	32x20	89-95	7702195	**CC018**	20 teeth
CS	32x20	88-91	7702195	**CC018**	20 teeth
Fire/Diesel 19 Dent.	29x19		7540062	**CC006**	19 teeth
Tutti i tipi	29.2x20		5946475	**CC004**	20 teeth

FORD

MODELLO MODEL	DIMENSIONI DIMENSIONS	ANNO YEAR	RIF ORIGINALE ORIGINAL REF	RIF CORAM CORAM REF	NOTE NOTES
CORCEL					
DEL REY 83	29.95x30		(ETMA) TR 1101	**CC023**	30 teeth
CORCEL 1					
Tutti i tipi/All types/Tous types	29.95x20		(ETMA) TR 1100	**CC022**	20 teeth
CORCEL 2					
Tutti i tipi/All types/Tous types	29.95x30		(ETMA) TR 1101	**CC023**	30 teeth
FIESTA					
1.6 Power/Rocam	30.4x21		XS61-4K258-AA	**CC030**	21 teeth

follow FORD

MODELLO MODEL	DIMENSIONI DIMENSIONS	ANNO YEAR	RIF ORIGINALE ORIGINAL REF	RIF CORAM CORAM REF	NOTE NOTES
SIERRA					
1.6	29.93x22		(ETMA) TR 1108	**CC013**	22 teeth

LANCIA

MODELLO MODEL	DIMENSIONI DIMENSIONS	ANNO YEAR	RIF ORIGINALE ORIGINAL REF	RIF CORAM CORAM REF	NOTE NOTES
DEDRA					
1.6 BZ	32x20	89-94	7702195	**CC018**	20 teeth
1580 MPI 16v FL.94	32x22		46448513	**CC019**	22 teeth
1580 MPI 8v FL.94/ 1580 SPI FL.94	32x20		7702195	**CC018**	20 teeth
DELTA					
1.1 Carb. R 86	32x20	86-92	7702195	**CC018**	20 teeth
1.3 Carb. R 86 Vet. 626853	32x20	86-92	7702195	**CC018**	20 teeth
1.5 Carb. R 86 Vet. 626853	32x20	86-92	7702195	**CC018**	20 teeth
1300	28x20		4314783	**CC002**	20 teeth
1500	31.93x20		5949990	**CC005**	20 teeth
1500	31.93x20		5949990R	**CC009**	20 teeth
Nuova Delta 1372 SPI / 1580 8v	32x20		7702195	**CC018**	20 teeth
Nuova Delta 1580 16V/ 90 cv/103cv	32x22		46448513	**CC019**	22 teeth
DELTA III					
1.4 - 1.6 D Multijet	43.2x26	08->	46308126	**CC038**	26 teeth
LYBRA					
1580 16v BZ/ 1596 16v BZ	32x22	99->	46448513	**CC019**	22 teeth
MUSA					
1.3 D Multijet - 1.4 - 1.9 D Multijet	33.9x23	04-dic	46308327	**CC042**	23 teeth
1.4	31.93x21	04->	46307552	**CC025**	21 teeth
1.4 LPG	33.9x23	10-dic	46308327	**CC042**	23 teeth
1.6 D Multijet	33.9x23	08-dic	46308327	**CC042**	23 teeth
1.9 Multijet	35.5x24	04->	46307676	**CC026**	24 teeth
PHEDRA					
2.2 JTD	38,8x29	02-ott	1400785680	**CC045**	39 teeth

follow LANCIA

MODELLO MODEL	DIMENSIONI DIMENSIONS	ANNO YEAR	RIF ORIGINALE ORIGINAL REF	RIF CORAM CORAM REF	NOTE NOTES
PRISMA					
1.3 - 1.5	32x20		7702195	**CC018**	20 teeth
1300-1500	31.93x20		5949990	**CC005**	20 teeth
1300-1500	31.93x20		5949990R	**CC009**	20 teeth
Y					
1.2	31.93x21	03->	46307552	**CC025**	21 teeth
1.2 (840AA, 840AF1A)	31.93x21	96->	46307552	**CC025**	21 teeth
1.2 16V (840AG1A)	31.93x21	00->	46307552	**CC025**	21 teeth
1.2 16V FL.2000	31.93x21	00-03	46307552	**CC025**	21 teeth
1.2 8v FL 2000 Vet. 3559479	29x19	00-03	7540062	**CC006**	19 teeth
1.2 8V FL 2000 Vet. 3559480	31.93x21	00-03	46307552	**CC025**	21 teeth
1.2 8V-16V	31.93x21	03->	46307552	**CC025**	21 teeth
1.4	31.93x21	03->	46307552	**CC025**	21 teeth
1.4 16v	32x22	03->	46448513	**CC019**	22 teeth
1.4 16V	31.93x21	03->	46307552	**CC025**	21 teeth
1108 SPI Cambio 5 marce	29x19	95-00	7540062	**CC006**	19 teeth
1242 MPI 16v Vet. 3395977	32x20	95-00	7702195	**CC018**	20 teeth
1242 MPI 16V Vet. 3395978	31.93x21	95-00	46307552	**CC025**	21 teeth
1242 SPI 8v Cambio 5 marce	29x19	95-00	7540062	**CC006**	19 teeth
1242 SPI 8v Cambio 6 marce Vet. 3395977	32x20	95-00	7702195	**CC018**	20 teeth
1242 SPI 8v Cambio 6 marce Vet. 3395978	31.93x21	95-00	46307552	**CC025**	21 teeth
1370 12v 75cv 55KW / 80cv 59KW	32x20	95-00	7702195	**CC018**	20 teeth
Y 10					
FL 889	29x19	89-92	7540062	**CC006**	19 teeth
R. 92	29x19	92-95	7540062	**CC006**	19 teeth
YPSILON					
1.2 - 1.2 Bifuel	29.2x20	11->	46308007	**CC037**	20 teeth
1.3 D Multijet	33.9x23	06->	46308327	**CC042**	23 teeth
ZETA					
2.0 16V	33x34	98-02	1497191088	**CC040**	34 teeth
2.0 16V	38,8x29	98-02	1400785680	**CC045**	39 teeth
2.0 JTD	38,8x29	99-02	1400785680	**CC045**	39 teeth
2.0 Turbo	38,8x29	95-02	1400785680	**CC045**	39 teeth
2.1 TD	38,8x29	96-99	1400785680	**CC045**	39 teeth

PLYMOUTH

MODELLO MODEL	DIMENSIONI DIMENSIONS	ANNO YEAR	RIF ORIGINALE ORIGINAL REF	RIF CORAM CORAM REF	NOTE NOTES
Tutti i tipi/All types/Tous types	29.95x30	83-95	(ETMA) TR 1101	**CC023**	30 teeth

RENAULT

MODELLO MODEL	DIMENSIONI DIMENSIONS	ANNO YEAR	RIF ORIGINALE ORIGINAL REF	RIF CORAM CORAM REF	NOTE NOTES
CLIO					
Tutti i tipi/All types/Tous types II SERIE	29.93x22 29.95x29		(ETMA) TR 1108 7700113959	**CC013** **CC027**	22 teeth 29 teeeth
ESPACE					
Tutti i tipi/All types/Tous types	29.95x29		7700113959	**CC027**	29 teeth
EXPRESS					
Tutti i tipi/All types/Tous types Tutti i tipi/All types/Tous types	29.93x22 29.95x29		(ETMA) TR 1108 7700113959	**CC013** **CC027**	22 teeth 29 teeth
KANGOO					
Tutti i tipi/All types/Tous types	29.95x29		7700113959	**CC027**	29 teeth
LAGUNA					
Tutti i tipi/All types/Tous types	29.95x29		7700113959	**CC027**	29 teeth
MEGANE					
Tutti i tipi/All types/Tous types	29.93x22		(ETMA) TR 1108	**CC013**	22 teeth
MEGANE Scenic					
Tutti i tipi/All types/Tous types	29.95X29		7700113959	**CC027**	29 teeth
NEVADA					
Tutti i tipi/All types/Tous types	29.95x29		7700113959	**CC027**	29 teeth
R-11					
Tutti i tipi/All types/Tous types	29.93x22		(ETMA) TR 1108	**CC013**	22 teeth
R-12					
Tutti i tipi/All types/Tous types	29.93x22		(ETMA) TR 1108	**CC013**	22 teeth

follow RENAULT					
MODELLO MODEL	**DIMENSIONI DIMENSIONS**	**ANNO YEAR**	**RIF ORIGINALE ORIGINAL REF**	**RIF CORAM CORAM REF**	**NOTE NOTES**
R-9					
Tutti i tipi/All types/Tous types	29.93x22		(ETMA) TR 1108	**CC013**	22 teeth
SUPER 5					
1.6 D	30x21	85-86	7701638464	**CC028**	21 teeth
SUPER 5 furgonato					
1.6 D	30x21	84-96	7701638464	**CC028**	21 teeth
TWINGO					
Tutti i tipi/All types/Tous types	29.25x29		7700113959	**CC027**	29 teeth

SEAT					
MODELLO MODEL	**DIMENSIONI DIMENSIONS**	**ANNO YEAR**	**RIF ORIGINALE ORIGINAL REF**	**RIF CORAM CORAM REF**	**NOTE NOTES**
CORDOBA					
1.9 TDI	39.3x30	02-set	46307152	**CC044**	30 theeth
IBIZA III					
1.4 TDI	39.3x30	02-mag	46307152	**CC044**	30 theeth
IBIZA IV					
1.4 TDI - 1.9 TDI	39.3x30	08-ott	46307152	**CC044**	30 theeth

SKODA					
MODELLO MODEL	**DIMENSIONI DIMENSIONS**	**ANNO YEAR**	**RIF ORIGINALE ORIGINAL REF**	**RIF CORAM CORAM REF**	**NOTE NOTES**
FABIA I					
1.4 TDI 1.9 TDI	39.3x30 39.3x30	03-ago 00-08	46307152 46307152	**CC044** **CC044**	30 theeth 30 theeth
FABIA I Combi					
1.4 TDI 1.9 TDI	39.3x30 39.3x30	03-lug 00-07	46307152 46307152	**CC044** **CC044**	30 theeth 30 theeth

follow SKODA

MODELLO MODEL	DIMENSIONI DIMENSIONS	ANNO YEAR	RIF ORIGINALE ORIGINAL REF	RIF CORAM CORAM REF	NOTE NOTES
OCTAVIA II					
1.8	39.3x30	96-00	46307152	**CC044**	30 theeth
OCTAVIA II Combi					
1.8 20V	39.3x30	98-00	46307152	**CC044**	30 theeth
ROOMSTER					
1.4 TDI	39.3x30	06-ott	46307152	**CC044**	30 theeth
1.9 TDI	39.3x30	06-giu	46307152	**CC044**	30 theeth

TOPAZ

MODELLO MODEL	DIMENSIONI DIMENSIONS	ANNO YEAR	RIF ORIGINALE ORIGINAL REF	RIF CORAM CORAM REF	NOTE NOTES
GUIA 4 CIL.					
Tutti i tipi/All types/Tous types	29.93x28		(ETMA) TR 1188	**CC014**	28 teeth

TOYOTA

MODELLO MODEL	DIMENSIONI DIMENSIONS	ANNO YEAR	RIF ORIGINALE ORIGINAL REF	RIF CORAM CORAM REF	NOTE NOTES
COROLLA					
Tutti i tipi/All types/Tous types	29.93x23		(ETMA) TR 1174	**CC016**	23 teeth
Diesel	38.12x23		(ETMA) TR 1171	**CC015**	23 teeth

VOLKSWAGEN

MODELLO MODEL	DIMENSIONI DIMENSIONS	ANNO YEAR	RIF ORIGINALE ORIGINAL REF	RIF CORAM CORAM REF	NOTE NOTES
BORA					
1.6 - 1.9 TDI - 2.3 V5	39.3x30	98-05	46307152	**CC044**	30 theeth
1.8 T	39.3x30	00-05	46307152	**CC044**	30 theeth
2.0	39.3x30	98-13	46307152	**CC044**	30 theeth
GOLF IV					
1.4 16V - 1.6	39.3x30	97-04	46307152	**CC044**	30 theeth
1.8	39.3x30	97-05	46307152	**CC044**	30 theeth
1.8 T GTI	39.3x30	01-mag	46307152	**CC044**	30 theeth

follow VOLKSWAGEN					
MODELLO **MODEL**	**DIMENSIONI** **DIMENSIONS**	**ANNO** **YEAR**	**RIF ORIGINALE** **ORIGINAL REF**	**RIF CORAM** **CORAM REF**	**NOTE** **NOTES**
POLO					
1.4 TDI - 1.9 TDI	39.3x30	01-set	46307152	**CC044**	30 theeth

CROCIERE TRIPODI
CROSS JOINTS
CROISILLONS
LISTA DI COMPARAZIONE – CROSS REFERENCES – REFERENCES CROISEES

CORAM	APPLICATION	O.E.	DIMENSIONI	OMCAR	ETMA	ALTRI RIF.
CC001	FIAT	4247799	25,5X20	TS00601		
CC001	FIAT	4314781	25,5X20	TS00601		
CC001	FIAT	4247799	25,5X20	TS00601		
CC002	FIAT	4247393	28x20	TS00606		
CC002	FIAT	4314783	28x20	TS00606		
CC004	FIAT	5946475	29.2x20	TS00600		
CC004	FIAT	91104366	29.2x20	TS00600		
CC005	FIAT	5949990	31.93x20	TS00603		
CC005	FIAT	7702195	31.93x20	TS00603		
CC006	FIAT-LANCIA	7540062	29x19	TS00602		
CC006	FIAT-LANCIA	7566182	29x19	TS00602		
CC007	FIAT	7508720	28x20	TS00609		
CC009	FIAT	5949990R	31.93x20			
CC009	FIAT	7702195R	31.93x20			
CC013	FORD-RENAULT		29.93x22		TR1108	(500MILLAS)TR15108
CC013	FORD-RENAULT		29.93x22		TR1108	(SPICER/ALBARUS)5-13154X
CC013	FORD-RENAULT		29.93x22		TR1108	(TOLEDO)TRT108
CC014	CHRYSLER		29.93x28		TR1188	(500MILLAS)TR15188
CC014	CHRYSLER		29.93x28		TR1188	(TOLEDO)TRT188
CC015	TOYOTA		38.12x23		TR1171	(500MILLAS)TR15171
CC015	TOYOTA		38.12x23		TR1171	(TOLEDO)TRT171
CC016	TOYOTA				TR1174	(500MILLAS)TR15174
CC016	TOYOTA		29.93x23		TR1174	(TOLEDO)TRT174
CC017	CHEVROLET		36.99x32		TR1160	(500MILLAS)TR15160
CC017	CHEVROLET		36.99x32		TR1160	(TOLEDO)TRT160
CC018	FIAT-LANCIA	4469834	32x20	TS00611		
CC018	FIAT-LANCIA	5949990	32x20	TS00611		
CC018	FIAT-LANCIA	7702194	32x20	TS00611		
CC018	FIAT-LANCIA	7702195	32x20	TS00611		
CC019	ALFA-FIAT-LANCIA	4644851	32x22	TS00613		
CC019	ALFA-FIAT-LANCIA	60813073	32x22	TS00613		
CC022	FORD		29.95x20		TR1100	
CC023	CHRYSLER		29.95x30		TR1101	
CC023	DODGE-FORD		29.95x30		TR1101	
CC024	DAEWOO	44103-781300	27.77x19		TR1197	
CC025	FIAT-LANCIA	46307552	31.93x21	TS00615		BIRTH:3383
CC026	FIAT-LANCIA	46307676	35.5x24	TS00614		BIRTH:3385
CC027	RENAULT	7700113959	29.95x29			

CORAM	APPLICATION	O.E.	DIMENSIONI	OMCAR	ETMA	ALTRI RIF.
CC027	RENAULT	7700111779	29.95x29			
CC028	RENAULT	7701638464	30x21	TS00608		
CC030	FORD	XS61-4K258-AA	30.4x21			
CC037	FIAT	46308007	29.2x20	616		VEMA:761
CC038	ALFA-FIAT-LANCIA	46308126	43.2x26	TS00617		
CC039	FIAT / ALFA ROMEO	46308281	41.53x24	640		MALO':121020/BIRTH:3457
CC040	FIAT / LANCIA	1497191088	33x34			BIRTH:3459
CC040	FIAT / LANCIA	9619947588	33x34			BIRTH:3459
CC041	FIAT	46308047	32x22			BIRTH:3456/MALO':121006
CC041	FIAT	46308047	32x22			HEMAN:TR50070/VEMA:829
CC042	FIAT / LANCIA	46308327	33,9x23			BIRTH:3439/MALO':121015
CC042	FIAT / LANCIA	46308327	33,9x23			HEMAN:TR50025/VEMA:822
CC043	FIAT	51733783	32x27			BIRTH:3438/MALO':121018
CC043	FIAT	51733783	32x27			HEMAN:TR50050/VEMA:763
CC044	FIAT	46307170	39,3x30			MALO':121007/VEMA:831
CC044	FIAT	46307689	39,3x30			MALO':121007/VEMA:831
CC044	FIAT	46307698	39,3x30			MALO':121007/VEMA:831
CC044	FIAT	46307699	39,3x30			MALO':121007/VEMA:831
CC044	FIAT	46307866	39,3x30			MALO':121007/VEMA:831
CC044	FIAT	46801690	39,3x30			MALO':121007/VEMA:831
CC044	FIAT-SEAT-SKODA-VW	46307152	39,3x30			MALO':121007/VEMA:831
CC044	FIAT-SEAT-SKODA-VW	1J0498103K	39,3x30			MALO':121007/VEMA:831
CC044	SEAT-SKODA-VW	1J0407363B	39,3x30			MALO':121007/VEMA:831
CC045	FIAT	1400785680	38,8x39	TS00612		VEMA:779/BIRTH:3303
CC045	FIAT	1463107080	38,8x39	TS00612		MALO':121013/HEMAN:TR50040
CC045	FIAT	1481452080	38,8x39	TS00612		VEMA:779/BIRTH:3303
CC045	FIAT	1491235080	38,8x39	TS00612		MALO':121013/HEMAN:TR50040
CC045	FIAT	1491237080	38,8x39	TS00612		VEMA:779/BIRTH:3303
CC045	FIAT	1491239080	38,8x39	TS00612		MALO':121013/HEMAN:TR50040
CC045	FIAT	1495537080	38,8x39	TS00612		VEMA:779/BIRTH:3303
CC045	FIAT	1495541080	38,8x39	TS00612		MALO':121013/HEMAN:TR50040
CC045	FIAT	1497187088	38,8x39	TS00612		VEMA:779/BIRTH:3303
CC045	FIAT	9617408188	38,8x39	TS00612		MALO':121013/HEMAN:TR50040
CC045	FIAT	9626083988	38,8x39	TS00612		VEMA:779/BIRTH:3303
CC046	ALFA ROMEO - CHRYSLER - FIAT - LANCIA - JEEP	46308949	39,90x23			ZETA-ERRE:ZR5105
CC046	CHRYSLER - FIAT	51983847	39,90x23			ZETA-ERRE:ZR5105
CC046	CHRYSLER - FIAT	51983794	39,90x23			ZETA-ERRE:ZR5105
CC046	FIAT - JEEP	51973142	39,90x23			ZETA-ERRE:ZR5105

CORAM	APPLICATION	O.E.	DIMENSIONI	OMCAR	ETMA	ALTRI RIF.
CC046	FIAT - JEEP	51973143	39,90x23			ZETA-ERRE:ZR5105

ALFA ROMEO - CHRYSLER - FIAT	CORAM
46308949	CC046
ALFA-FIAT-LANCIA	**CORAM**
46308126	CC038
4644851	CC019
60813073	CC019
CHRYSLER - FIAT	**CORAM**
51983794	CC046
51983847	CC046
DAEWOO	**CORAM**
44103-781300	CC024
FIAT	**CORAM**
1400785680	CC045
1463107080	CC045
1481452080	CC045
1491235080	CC045
1491237080	CC045
1491239080	CC045
1495537080	CC045
1495541080	CC045
1497187088	CC045
4247393	CC002
4247799	CC001
4314781	CC001
4314783	CC002
46307170	CC044
46307689	CC044
46307698	CC044
46307699	CC044
46307866	CC044
46308007	CC037
46308047	CC041
46801690	CC044
51733783	CC043
5946475	CC004
5949990	CC005

5949990R	CC009
7508720	CC007
7702195	CC005
7702195R	CC009
91104366	CC004
9617408188	CC045
9626083988	CC045
FIAT - JEEP	**CORAM**
51973142	CC046
51973143	CC046
FIAT / ALFA ROMEO	**CORAM**
46308281	CC039
FIAT / LANCIA	**CORAM**
1497191088	CC040
46308327	CC042
9619947588	CC040
FIAT-LANCIA	**CORAM**
4469834	CC018
46307552	CC025
46307676	CC026
5949990	CC018
7540062	CC006
7566182	CC006
7702194	CC018
7702195	CC018
FIAT-SEAT-SKODA-VW	**CORAM**
1J0498103K	CC044
46307152	CC044
FORD	**CORAM**
XS61-4K258-AA	CC030
RENAULT	**CORAM**
7700111779	CC027
7700113959	CC027
7701638464	CC028

SEAT-SKODA-VW	CORAM
1J0407363B	CC044

CROCIERE TRIPODI
CROSS JOINTS
CROISILLONS

LISTA DI COMPARAZIONE CON COMPETITORS – COMPETITORS CROSS REFERENCES
REFERENCES CROISEES AVEC CODES DES CONCURRENTS

ALTRI RIF.	CORAM
(500 MILLAS) TR15108	CC013
(500 MILLAS) TR15160	CC017
(500 MILLAS) TR15171	CC015
(500 MILLAS) TR15174	CC016
(500 MILLAS) TR15188	CC014
(SPICER/ALBARUS) 5-13154X	CC013
(TOLEDO) TRT108	CC013
(TOLEDO) TRT160	CC017
(TOLEDO) TRT171	CC015
(TOLEDO) TRT174	CC016
(TOLEDO) TRT188	CC014
BIRTH : 3383	CC025
BIRTH : 3385	CC026
BIRTH: 3438 / MALO': 121018	CC043
BIRTH: 3439 / MALO': 121015	CC042
BIRTH: 3456 / MALO': 121006	CC041
BIRTH: 3459	CC040
HEMAN: TR50025 / VEMA: 822	CC042
HEMAN: TR50050 / VEMA: 763	CC043
HEMAN: TR50070 / VEMA: 829	CC041
MALO': 121007 / VEMA: 831	CC044
MALO':121013 / HEMAN:TR50040	CC045
MALO':121020 / BIRTH: 3457	CC039
VEMA: 761	CC037
VEMA: 779 / BIRTH: 3303	CC045
ZETA-ERRE: ZR5105	CC046

ETMA	CORAM
TR1100	CC022
TR1101	CC023
TR1108	CC013
TR1160	CC017
TR1171	CC015
TR1174	CC016
TR1188	CC014
TR1197	CC024

OMCAR	CORAM
616	CC037
640	CC039
TS 00600	CC004
TS 00601	CC001
TS 00602	CC006
TS 00603	CC005
TS 00606	CC002
TS 00608	CC028
TS 00609	CC007
TS 00611	CC018
TS 00613	CC019
TS 00614	CC026
TS 00615	CC025
TS00612	CC045
TS00617	CC038

CC001 — Mis: 25,5X20

FIAT	4247799		
FIAT	4247799		
FIAT	4314781		

CC002 — Mis: 28x20

FIAT	4247393		
FIAT	4314783		

CC004 — Mis: 29.2x20

FIAT	5946475		
FIAT	91104366		

CC005 — Mis: 31.93x20

FIAT	5949990		
FIAT	7702195		

CC006 — Mis: 29x19

FIAT-LANCIA	7540062		
FIAT-LANCIA	7566182		

CC007 — Mis: 28x20

FIAT	7508720		

CC009 — Mis: 31.93x20

FIAT	5949990R		
FIAT	7702195R		

CC013 — Mis: 29.93x22

FORD-RENAULT			
FORD-RENAULT			
FORD-RENAULT			

CC014 — Mis: 29.93x28

CHRYSLER			
CHRYSLER			

CC015 — Mis: 38.12x23

TOYOTA			
TOYOTA			

CC016

TOYOTA			
TOYOTA			

CC017 — Mis: 36.99x32

CHEVROLET			
CHEVROLET			

CC018 — Mis: 32x20

FIAT-LANCIA	4469834		
FIAT-LANCIA	5949990		
FIAT-LANCIA	7702194		
FIAT-LANCIA	7702195		

CC019 — Mis: 32x22

ALFA-FIAT-LANCIA	4644851		
ALFA-FIAT-LANCIA	60813073		

CC022 — Mis: 29.95x20

FORD			

CC023 — Mis: 29.95x30

CHRYSLER			
DODGE-FORD			

CC024 — Mis: 27.77x19

DAEWOO	44103-781300		

CC025 — Mis: 31.93x21

FIAT-LANCIA	46307552		

CC026 — Mis: 35.5x24

FIAT-LANCIA	46307676		

CC027 — Mis: 29.95x29

RENAULT	7700111779		
RENAULT	7700113959		

CC028 — Mis: 30x21

RENAULT	7701638464		

CC030 — Mis: 30.4x21

FORD	XS61-4K258-AA		

CC037 — Mis: 29.2x20

FIAT	46308007		

CC038 — Mis: 43.2x26

ALFA-FIAT-LANCIA	46308126		

CC039 — Mis: 41.53x24

FIAT / ALFA ROMEO	46308281		

CC040 — Mis: 33x34

FIAT / LANCIA	1497191088		
FIAT / LANCIA	9619947588		

CC041 — Mis: 32x22

FIAT	46308047		
FIAT	46308047		

CC042 — Mis: 33,9x23

FIAT / LANCIA	46308327		
FIAT / LANCIA	46308327		

CC043 — Mis: 32x27

FIAT	51733783		
FIAT	51733783		

CC044 — Mis: 39,3x30

FIAT	46307170	FIAT	46801690
FIAT	46307689	FIAT-SEAT-SKODA-VW	1J0498103K
FIAT	46307698	FIAT-SEAT-SKODA-VW	46307152
FIAT	46307699	SEAT-SKODA-VW	1J0407363B
FIAT	46307866		

CC045 — Mis: 38,8x39

FIAT	1400785680	FIAT	1491239080
FIAT	1463107080	FIAT	1495537080
FIAT	1481452080	FIAT	1495541080
FIAT	1491235080	FIAT	1497187088
FIAT	1491237080	FIAT	9617408188

CC046 — Mis: 39,90x23

ALFA ROMEO - CHRYSLER - FIAT - LANCIA - JEEP	46308949		
CHRYSLER - FIAT	51983794		
CHRYSLER - FIAT	51983847		
FIAT - JEEP	51973142		
FIAT - JEEP	51973143		

Coram®

by HPARTS
Automotive Solutions

CROCIERE CARDANICHE AUTO E VEICOLI COMMERCIALI
Universal cross joints for cars and commercial vehicles

CITROEN

MODELLO MODEL	DIMENSIONI DIMENSIONS	ANNO YEAR	RIF ORIGINALE ORIGINAL REF	RIF CORAM CORAM REF	NOTE NOTES
2CV - GS					
Tutti i tipi/All types/Tous types	23,84x61,30		4606993	**CC003**	

FIAT

MODELLO MODEL	DIMENSIONI DIMENSIONS	ANNO YEAR	RIF ORIGINALE ORIGINAL REF	RIF CORAM CORAM REF	NOTE NOTES
1100					
R-T-TN-T3	23,84x61,30		4593225	**CC003**	
124					
Tutti i tipi	23,84x61,30		4593225	**CC003**	
124 Special					
Tutti i tipi	23,84x61,30		4593225	**CC003**	
125					
Tutti i tipi	23,84x61,30		105E8039A	**CC003**	
125 Special					
Tutti i tipi	23,84x61,30		105E8039A	**CC003**	
126					
Tutti i tipi	16,05x38,90		4193733	**CC010**	
127					
Tutti i tipi	16,05x38,90		4193733	**CC010**	
128					
Tutti i tipi	16,05x38,90		4193733	**CC010**	
128 Rally					
Tutti i tipi	16,05x38,90		4193733	**CC010**	
128 Special					
Tutti i tipi	16,05x38,90		4193733	**CC010**	

follow FIAT					
MODELLO MODEL	**DIMENSIONI DIMENSIONS**	**ANNO YEAR**	**RIF ORIGINALE ORIGINAL REF**	**RIF CORAM CORAM REF**	**NOTE NOTES**
1300					
Tutti i tipi	23,84x61,30		4593225	**CC003**	
131					
Tutti i tipi	23,84x61,30		4606993	**CC003**	
132					
Tutti i tipi	23,84x61,30		4593225	**CC003**	
1500					
Tutti i tipi	23,84x61,30		4593225	**CC003**	
241					
Furgone	23,84x61,30		4606993	**CC003**	
Argenta					
Tutti i tipi	23,84x61,30		5959654	**CC003**	
Daily					
Tutti i tipi/All types/Tous types	27,01x81,75		100000237	**CC008**	
Panda					
4x4	23,84x61,30		4593225	**CC003**	
FORD					
MODELLO MODEL	**DIMENSIONI DIMENSIONS**	**ANNO YEAR**	**RIF ORIGINALE ORIGINAL REF**	**RIF CORAM CORAM REF**	**NOTE NOTES**
Capri					
Tutti i tipi	23,84x61,30		8542225	**CC003**	
Corsair					
Tutti i tipi	23,84x61,30		8542225	**CC003**	
Cortina					
Tutti i tipi	23,84x61,30		8542225	**CC003**	

follow FORD					
MODELLO MODEL	**DIMENSIONI DIMENSIONS**	**ANNO YEAR**	**RIF ORIGINALE ORIGINAL REF**	**RIF CORAM CORAM REF**	**NOTE NOTES**
Taunus					
Tutti i tipi	23,84x61,30		34254	**CC003**	
Transit					
Tutti i tipi/All types/Tous types	27,01x81,75		100000237	**CC008**	
Triumph					
Tutti i tipi	23,84x61,30		34254	**CC003**	
Zodiac					
Tutti i tipi	23,84x61,30		34254	**CC003**	
INNOCENTI					
MODELLO MODEL	**DIMENSIONI DIMENSIONS**	**ANNO YEAR**	**RIF ORIGINALE ORIGINAL REF**	**RIF CORAM CORAM REF**	**NOTE NOTES**
Mini					
Cooper	23,84x61,30		2101-2202	**CC003**	
ISUZU					
MODELLO MODEL	**DIMENSIONI DIMENSIONS**	**ANNO YEAR**	**RIF ORIGINALE ORIGINAL REF**	**RIF CORAM CORAM REF**	**NOTE NOTES**
Faster					
KB20-KB20D	23,84x61,30		5-37300-019-0	**CC003**	
opel monterey A					
3.1 TD (UBS69) 3.2 (UBS69)	76,5x29 76,5x29		8-97080-897-1 8-97080-897-1	**CC032** **CC032**	
LADA					
MODELLO MODEL	**DIMENSIONI DIMENSIONS**	**ANNO YEAR**	**RIF ORIGINALE ORIGINAL REF**	**RIF CORAM CORAM REF**	**NOTE NOTES**
Niva					
Tutti i tipi/All types/Tous types	28x72,5		2121-2202025	**CC021**	
Vaz					
2121	28x72,5		2121-2202025	**CC021**	

follow LADA					
MODELLO MODEL	DIMENSIONI DIMENSIONS	ANNO YEAR	RIF ORIGINALE ORIGINAL REF	RIF CORAM CORAM REF	NOTE NOTES
Ziguli					
Ziguli	23,84x61,30		656762	**CC003**	
RENAULT					
MODELLO MODEL	DIMENSIONI DIMENSIONS	ANNO YEAR	RIF ORIGINALE ORIGINAL REF	RIF CORAM CORAM REF	NOTE NOTES
1000					
Special	23,84x61,30		659773	**CC003**	
1100					
Tutti i tipi	23,84x61,30		659773	**CC003**	
1300					
Tutti i tipi	23,84x61,30		659773	**CC003**	
1301					
Tutti i tipi	23,84x61,30		659773	**CC003**	
1500					
Tutti i tipi	23,84x61,30		659773	**CC003**	
1501					
Tutti i tipi/All types/Tous types	23,84x61,30		659773	**CC003**	
Extrasette R 2130					
lato cambio	23,84x61,30		659773	**CC003**	
R4-R4L					
Tutti i tipi	23,84x61,30		8543672	**CC003**	
ZAZ					
ZAZ	23,84x61,30		659773	**CC003**	

ROVER-LAND ROVER

MODELLO MODEL	DIMENSIONI DIMENSIONS	ANNO YEAR	RIF ORIGINALE ORIGINAL REF	RIF CORAM CORAM REF	NOTE NOTES
Land Rover					
Tutti i tipi	23,84x61,30		600628	**CC003**	

VOLVO

MODELLO MODEL	DIMENSIONI DIMENSIONS	ANNO YEAR	RIF ORIGINALE ORIGINAL REF	RIF CORAM CORAM REF	NOTE NOTES
144					
Tutti i tipi	23,84x61,30		659773	**CC003**	
260					
Tutti i tipi	23,84x61,30		1217606-1	**CC003**	
444					
Tutti i tipi	23,84x61,30		659773	**CC003**	
445					
Tutti i tipi	23,84x61,30		659773	**CC003**	
P 120					
Tutti i tipi	23,84x61,30		659773	**CC003**	
P 130					
Tutti i tipi	23,84x61,30		659773	**CC003**	
P 1800					
Tutti i tipi	23,84x61,30		659773	**CC003**	
P 220					
Tutti i tipi	23,84x61,30		659773	**CC003**	

WOLGA

MODELLO MODEL	DIMENSIONI DIMENSIONS	ANNO YEAR	RIF ORIGINALE ORIGINAL REF	RIF CORAM CORAM REF	NOTE NOTES
Gaz					
Gaz 402	30x88,5		3102-2201025	**CC020**	

CORAM	APPLICATION	O.E.
CC003	FIAT	4593224
CC003	FIAT	4593225
CC003	FIAT	4606993
CC003	FIAT	5959654
CC003	FORD	3008E-4635A
CC003	FORD	105E-7039A
CC003	FORD	8542225
CC003	FORD	34254
CC003	FORD	3012E-4635A
CC003	INNOCENTI	2101-2202
CC003	INNOCENTI	39602101
CC003	ISUZU	5-37300-019-0
CC003	LADA	656762
CC003	LAND ROVER	600628
CC003	RENAULT	659773
CC003	RENAULT	8543672
CC003	VOLVO	1217606-1
CC008	FIAT	100000237
CC010	FIAT	4193733
CC010	FIAT	4193734
CC010	FIAT	4196735
CC020	LADA	3102-2201025
CC021	LADA	2121-2202025
CC032	ISUZU	8-97080-897-1

FIAT	CORAM
100000237	CC008
4193733	CC010
4193734	CC010
4196735	CC010
4593224	CC003
4593225	CC003
4606993	CC003
5959654	CC003
FORD	**CORAM**
105E-7039A	CC003
3008E-4635A	CC003
3012E-4635A	CC003
34254	CC003
8542225	CC003
INNOCENTI	**CORAM**
2101-2202	CC003
39602101	CC003
ISUZU	**CORAM**
5-37300-019-0	CC003
8-97080-897-1	CC032
LADA	**CORAM**
2121-2202025	CC021
3102-2201025	CC020
656762	CC003
LANDROVER	**CORAM**
600628	CC003
RENAULT	**CORAM**
659773	CC003
8543672	CC003
VOLVO	**CORAM**
1217606-1	CC003

CC003

FIAT	4593224	FORD	3008E-4635A
FIAT	4593225	FORD	3012E-4635A
FIAT	4606993	FORD	34254
FIAT	5959654	FORD	8542225
FORD	105E-7039A	INNOCENTI	2101-2202

CC008

FIAT	100000237		

CC010

FIAT	4193733		
FIAT	4193734		
FIAT	4196735		

CC020

LADA	3102-2201025		

CC021

LADA	2121-2202025		

CC032

ISUZU	8-97080-897-1		

Coram®

by HPARTS
Automotive Solutions

CUSCINETTI AMMORTIZZATORI AUTO E VEICOLI COMMERCIALI
Shock absorber bearings for cars and commercial vehicles

ABARTH

MODELLO MODEL	DIMENSIONI DIMENSIONS	ANNO YEAR	RIF ORIGINALE ORIGINAL REF	RIF CORAM CORAM REF	NOTE NOTES
500 / 595 / 695					
1.4		08->	5035.57	**CA032**	
500C / 595C / 695C					
1.4		16->	5035.57	**CA032**	

ALFA ROMEO

MODELLO MODEL	DIMENSIONI DIMENSIONS	ANNO YEAR	RIF ORIGINALE ORIGINAL REF	RIF CORAM CORAM REF	NOTE NOTES
ALFA 145/146					
1.4 i.e - 1.4 i.e 16V T.S.		94->	60806398	**CA006**	FRONT
1.6 i.e - 1.6 i.e 16V T.S.		94-01	60806398	**CA006**	FRONT
1.7 i.e 16V		94-96	60806398	**CA006**	FRONT
1.8 i.e 16V - 1.8 i.e. 16V T.S.		96-01	60806398	**CA006**	FRONT
1.9 JTD - 1.9 TD		94-01	60806398	**CA006**	FRONT
2.0 16V Quadrifoglio - 2.0 16V T.S		95-01	60806398	**CA006**	FRONT
ALFA 155					
1.6 16V T.S.		92->	60806398	**CA006**	FRONT
1.7 T.S. - 1.7 T.S. 16V		93-97	60806398	**CA006**	FRONT
1.7 T.S. (167.A4D, 167.A4H)		93-96	60806398	**CA006**	FRONT
1.8 T.S.		92-97	60806398	**CA006**	FRONT
1.8 T.S. Sport (167.A4A,167.A4C,167.A4E)		92-96	60806398	**CA006**	FRONT
1.9 TD (167.A3)		93-97	60806398	**CA006**	FRONT
2.0 16V Turbo Q4		92-97	60806398	**CA006**	FRONT
2.0 16V turboQ4(167.A2B,167.A2C,167.A2E)		92-97	60806398	**CA006**	FRONT
2.0 T.S (167.A2) - 2.0 T.S (167.A2A)		92-95	60806398	**CA006**	FRONT
2.0 T.S. 16V (167.A2G)		95-97	60806398	**CA006**	FRONT
2.5 TD (167.A1A)		93-97	60806398	**CA006**	FRONT
2.5 V6 (167.A1C, 167.A1E) - 2.5 V6 (167.A1)		92-97	60806398	**CA006**	FRONT

follow ALFA ROMEO

MODELLO MODEL	DIMENSIONI DIMENSIONS	ANNO YEAR	RIF ORIGINALE ORIGINAL REF	RIF CORAM CORAM REF	NOTE NOTES
ALFA 164					
2.0		87-98	60501446	**CA013**	FRONT
2.0 T.S. (164.A2C, 164.A2L)		87-92	60501446	**CA013**	FRONT
2.0 T.S. (164.A2H)		87-90	60501446	**CA013**	FRONT
2.0 T.S. (164.H3)		92-98	60501446	**CA013**	FRONT
2.0 Turbo		87-98	60501446	**CA013**	FRONT
2.0 V6 Turbo (164.A2G,164.A2F)		91-92	60501446	**CA013**	FRONT
2.0 V6 Turbo (164.K3)		92-98	60501446	**CA013**	FRONT
2.5 TD (164.A1A)		87-92	60501446	**CA013**	FRONT
2.5 TD (164.K2A, 164.K2B)		92-98	60501446	**CA013**	FRONT
3.0 i.e QV (164.AG)		90-92	60501446	**CA013**	FRONT
3.0 V6 (164.A, 164.AD, 164.AH, 164.AB)		87-92	60501446	**CA013**	FRONT
3.0 V6 (164.H1A, 164.H1B, 164.K1P)		92-98	60501446	**CA013**	FRONT
ALFA 33					
1.2 (905.A)		83-89	60501446	**CA013**	FRONT
1.3		83-89	60501446	**CA013**	FRONT
1.3		83-89	60501446	**CA013**	FRONT
1.3 i.e.		83-89	60501446	**CA013**	FRONT
1.4 i.e. (907.A3A, 907.A3B)		91-94	60501446	**CA013**	FRONT
1.5		83-93	60501446	**CA013**	FRONT
1.5 4x4		83-89	60501446	**CA013**	FRONT
1.5 4x4 (905.A2F, 905.A2M, 905.A2T)		86-89	60501446	**CA013**	FRONT
1.5 i.e.		90-94	60501446	**CA013**	FRONT
1.5 QV (905.A2N, 905.A2V)		84-89	60501446	**CA013**	FRONT
1.7		86-89	60501446	**CA013**	FRONT
1.7 i.e. (905.A3D)		88-89	60501446	**CA013**	FRONT
1.7 i.e. (907.A1A)		90-94	60501446	**CA013**	FRONT
1.7 i.e. 4x4		90-92	60501446	**CA013**	FRONT
1.7 QV (905.A3)		88-89	60501446	**CA013**	FRONT
1.8 TD		86-90	60501446	**CA013**	FRONT
ALFA 33 Sport Wagon (907A)					
1.5		84-89	60501446	**CA013**	FRONT
1.5 4x4		84-89	60501446	**CA013**	FRONT
1.7		88-89	60501446	**CA013**	FRONT
1.7 i.e.		88-89	60501446	**CA013**	FRONT
1.7 i.e. 4x4		88-89	60501446	**CA013**	FRONT
1.8 TD		86-89	60501446	**CA013**	FRONT

follow ALFA ROMEO

MODELLO MODEL	DIMENSIONI DIMENSIONS	ANNO YEAR	RIF ORIGINALE ORIGINAL REF	RIF CORAM CORAM REF	NOTE NOTES
ALFA 33 Sport Wagon (907B)					
1.4 i.e.		91-94	60501446	**CA013**	FRONT
1.4 i.e. 4x4		91-94	60501446	**CA013**	FRONT
1.5 i.e.		90-94	60501446	**CA013**	FRONT
1.7 i.e.		92-94	60501446	**CA013**	FRONT
1.7 i.e. 4x4		90-92	60501446	**CA013**	FRONT
ALFA ARNA					
1.2 (920.AA, 920.AB, 920.AC)		85-86	60501446	**CA013**	FRONT
1.3 TI (920.A1B)		83-86	60501446	**CA013**	FRONT
1.5		85-86	60501446	**CA013**	FRONT

AUDI

MODELLO MODEL	DIMENSIONI DIMENSIONS	ANNO YEAR	RIF ORIGINALE ORIGINAL REF	RIF CORAM CORAM REF	NOTE NOTES
A1					
1.2 TFSI - 1.4 TFSI - 1.6 TDI		10->	1J0412249	**CA020**	
2.0 TDI		11->	1J0412249	**CA020**	
A1 Sportback					
1.2 TFSI		12->	1J0412249	**CA020**	
1.4 TFSI - 1.6 TDI		11->	1J0412249	**CA020**	
A3					
1.6		96-00	357412249	**CA016**	FRONT
1.6 - 1.8 - 1.8 T - 1.8 T quattro		96->	1J0412249	**CA016**	
1.8 - 1.8 T - 1.8 T quattro		96->	357412249	**CA016**	FRONT
1.8 quattro		98->	357412249	**CA016**	FRONT
1.9 TDI		96-01	357412249	**CA016**	FRONT
1.9 TDI		96-01	1J0412249	**CA020**	
1.9 TDI quattro		00->	357412249	**CA016**	FRONT
1.9 TDI quattro		00->	1J0412249	**CA020**	
S3 quattro		99->	357412249	**CA016**	FRONT
S3 quattro		99->	1J0412249	**CA020**	
AUDI 80 (80, 82, B1)					
1.3		72-78	021156017A	**CA017**	FRONT
1.6		75-78	021156017A	**CA017**	FRONT
1.6 GT		73-76	021156017A	**CA017**	FRONT
1.6 GTE		76-78	021156017A	**CA017**	FRONT

follow AUDI

MODELLO MODEL	DIMENSIONI DIMENSIONS	ANNO YEAR	RIF ORIGINALE ORIGINAL REF	RIF CORAM CORAM REF	NOTE NOTES
AUDI 80 (81, 85, B2)					
1.3		78-86	021156017A	**CA017**	FRONT
1.6		78-86	021156017A	**CA017**	FRONT
1.6 D		80-86	021156017A	**CA017**	FRONT
1.6 GLE		79-86	021156017A	**CA017**	FRONT
1.6 TD		81-86	021156017A	**CA017**	FRONT
1.8		83-86	021156017A	**CA017**	FRONT
1.8 CC quattro (85Q)		84-86	021156017A	**CA017**	FRONT
1.8 GTE		84-86	021156017A	**CA017**	FRONT
1.8 GTE quattro (85Q)		84-86	021156017A	**CA017**	FRONT
1.9 CD-5S		81-83	021156017A	**CA017**	FRONT
2.0		83-84	021156017A	**CA017**	FRONT
2.0 quattro (85Q) - 2.2 quattro (85Q)		82-84	021156017A	**CA017**	FRONT
AUDI 80 (89,89Q,8A,B3)					
1.4		86-88	021156017A	**CA017**	FRONT
1.6		86-91	021156017A	**CA017**	FRONT
1.6 D - 1.6 TD		86-91	021156017A	**CA017**	FRONT
1.8 - 1.8 quattro		86-90	021156017A	**CA017**	FRONT
1.8 E - 1.8 E quattro		86-91	021156017A	**CA017**	FRONT
1.8 S - 1.8 S quattro		86-91	021156017A	**CA017**	FRONT
1.9 D		89-91	021156017A	**CA017**	FRONT
2.0 - 2.0 quattro		90-91	021156017A	**CA017**	FRONT
2.0 E - 2.0 E quattro		88-90	021156017A	**CA017**	FRONT
2.0 E 16V - 2.0 E 16V quattro		90-91	021156017A	**CA017**	FRONT
AUDI 80 (8C,B4)					
1.6		91-94	021156017A	**CA017**	FRONT
1.6 E		93-94	021156017A	**CA017**	FRONT
1.9 TD - 1.9 TDI		91-94	021156017A	**CA017**	FRONT
2.0 - 2.0 E - 2.0 E quattro		91-94	021156017A	**CA017**	FRONT
2.0 E 16V - 2.0 E 16V quattro		92-94	021156017A	**CA017**	FRONT
2.3 E - 2.3 E quattro		91-94	021156017A	**CA017**	FRONT
2.6 - 2.6 quattro		92-94	021156017A	**CA017**	FRONT
2.8 - 2.8 quattro		91-94	021156017A	**CA017**	FRONT
S2 quattro		93-94	021156017A	**CA017**	FRONT

follow AUDI

MODELLO MODEL	DIMENSIONI DIMENSIONS	ANNO YEAR	RIF ORIGINALE ORIGINAL REF	RIF CORAM CORAM REF	NOTE NOTES
AUDI 80 Avant (8C,B4)					
1.6 E		93-96	021156017A	**CA017**	FRONT
1.9 TDI		92-96	021156017A	**CA017**	FRONT
2.0 - 2.0 E		92-96	021156017A	**CA017**	FRONT
2.0 E 16V - 2.0 E 16V quattro		92-96	021156017A	**CA017**	FRONT
2.3 E - 2.3 E quattro		91-96	021156017A	**CA017**	FRONT
2.6 - 2.6 quattro		92-96	021156017A	**CA017**	FRONT
2.8 - 2.8 quattro		91-96	021156017A	**CA017**	FRONT
RS2 quattro (P1)		93-95	021156017A	**CA017**	FRONT
S2 quattro		93-95	021156017A	**CA017**	FRONT
AUDI 90 (81,85,B2)					
1.6 TD		85-87	021156017A	**CA017**	FRONT
2.0		84-87	021156017A	**CA017**	FRONT
2.2 - 2.2 E quattro		84-87	021156017A	**CA017**	FRONT
AUDI 90 (89,89Q,8A,B3)					
1.6 TD		87-91	021156017A	**CA017**	FRONT
2.0 - 2.0 20 V - 2.0 20 V quattro		88-91	021156017A	**CA017**	FRONT
2.2 E - 2.2 E quattro		87-91	021156017A	**CA017**	FRONT
2.3 E		87-91	021156017A	**CA017**	FRONT
2.3 E 20V - 2.3 E 20V quattro -2.3 E quattro		88-91	021156017A	**CA017**	FRONT
CABRIOLET (8GT,B4)					
1.8		97-00	021156017A	**CA017**	FRONT
1.9 TDI		95-00	021156017A	**CA017**	FRONT
2.0 16V		95-96	021156017A	**CA017**	FRONT
2.0 E		93-98	021156017A	**CA017**	FRONT
2.3 E		91-94	021156017A	**CA017**	FRONT
2.8		92-00	021156017A	**CA017**	FRONT

follow AUDI

MODELLO MODEL	DIMENSIONI DIMENSIONS	ANNO YEAR	RIF ORIGINALE ORIGINAL REF	RIF CORAM CORAM REF	NOTE NOTES
COUPE (81,85)					
1.6		80-81	021156017A	**CA017**	FRONT
1.8		81-83	021156017A	**CA017**	FRONT
1.8 GT		82-88	021156017A	**CA017**	FRONT
1.8 GT quattro		84-88	021156017A	**CA017**	FRONT
1.9		80-83	021156017A	**CA017**	FRONT
2.0		83-88	021156017A	**CA017**	FRONT
2.1 GT		82-84	021156017A	**CA017**	FRONT
2.2 GT		81-88	021156017A	**CA017**	FRONT
2.2 quattro		84-88	021156017A	**CA017**	FRONT
2.3 - 2.3 quattro		87-88	021156017A	**CA017**	FRONT
COUPE (89,8B)					
1.8		89-91	021156017A	**CA017**	FRONT
2.0		89-96	021156017A	**CA017**	FRONT
2.0 16V		92-96	021156017A	**CA017**	FRONT
2.0 20V quattro		89-91	021156017A	**CA017**	FRONT
2.2 quattro		88-91	021156017A	**CA017**	FRONT
2.3 - 2.3 quattro		88-96	021156017A	**CA017**	FRONT
2.3 20V - 2.3 20V quattro		88-91	021156017A	**CA017**	FRONT
2.6 - 2.6 quattro		92-96	021156017A	**CA017**	FRONT
2.8 -2.8 quattro - S2 quattro		90-92	021156017A	**CA017**	FRONT
QUATTRO (85)					
2.1 Turbo		80-87	021156017A	**CA017**	FRONT
2.2 20V		89-91	021156017A	**CA017**	FRONT
2.2 Turbo		87-89	021156017A	**CA017**	FRONT
TT (8N3)					
1.8 T		98->	357412249	**CA016**	FRONT
1.8 T quattro		98->	357412249	**CA016**	FRONT
3.2 VR6 quattro		03->	357412249	**CA016**	FRONT
TT Roadster (8N9)					
1.8 T		99->	357412249	**CA016**	FRONT
1.8 T quattro		99->	357412249	**CA016**	FRONT
3.2 VR6 quattro		03->	357412249	**CA016**	FRONT

CADILLAC

MODELLO MODEL	DIMENSIONI DIMENSIONS	ANNO YEAR	RIF ORIGINALE ORIGINAL REF	RIF CORAM CORAM REF	NOTE NOTES
BLS					
1.9 D - 2.0 T - 2.0 T AWD - 2.8 T		06->	344538	**CA037**	
2.0 T Flexpower		07->	344538	**CA037**	
2.8 T AWD		08->	344538	**CA037**	
BLS Wagon					
1.9 D - 2.0 T - 2.0 T AWD - 2.0 T Flexpower - 2.8 T		07->	344538	**CA037**	
2.8 T AWD		08->	344538	**CA037**	

CHEVROLET

MODELLO MODEL	DIMENSIONI DIMENSIONS	ANNO YEAR	RIF ORIGINALE ORIGINAL REF	RIF CORAM CORAM REF	NOTE NOTES
CAPTIVA					
2.0 D - 2.4 LPG - 2.4 LPG 4WD		07->	96626331	**CA029**	
2.0 D 4WD - 2.4 - 2.4 4WD - 3.2 4WD		06->	96626332	**CA029**	
3.0 4WD		ott-18	96626333	**CA029**	
CRUZE					
1.4 - 1.7 TD		13->	4806308	**CA031**	
1.6 - 1.8		09->	4806308	**CA031**	
1.7 D		12->	4806308	**CA031**	
1.8 LPG		11->	4806308	**CA031**	
2.0 CDI		09-nov	4806308	**CA031**	
CRUZE 2 volumi					
1.4 - 1.7		12->	4806308	**CA031**	
1.6 - 1.8 - 2.0		11->	4806308	**CA031**	
CRUZE Station Wagon					
1.4 - 1.6 - 1.7 TD - 1.8 - 2.0 TD		12->	4806308	**CA031**	
ORLANDO					
1.4		12->	4806308	**CA031**	
1.8 - 1.8 LPG - 2.0 D		11->	4806308	**CA031**	
TRAX					
1.4 - 1.4 AWD - 1.6 - 1.7 TD1.7 TD AWD		12->	4806308	**CA031**	
1.4 LPG		13->	4806308	**CA031**	

follow CHEVROLET

MODELLO MODEL	DIMENSIONI DIMENSIONS	ANNO YEAR	RIF ORIGINALE ORIGINAL REF	RIF CORAM CORAM REF	NOTE NOTES
VOLT					
EV 150		11->	4806308	**CA031**	

CITROEN

MODELLO MODEL	DIMENSIONI DIMENSIONS	ANNO YEAR	RIF ORIGINALE ORIGINAL REF	RIF CORAM CORAM REF	NOTE NOTES
AX					
1.0		86-98	5035.27	**CA009**	FRONT
1.0 E		96-88	5035.27	**CA009**	FRONT
1.1		86-97	5035.27	**CA009**	FRONT
1.1 Cat.		88-89	5035.27	**CA009**	FRONT
1.4		86-97	5035.27	**CA009**	FRONT
1.4 4x4		91-96	5035.27	**CA009**	FRONT
1.4 D		88-97	5035.27	**CA009**	FRONT
1.4 Gti		91-96	5035.27	**CA009**	FRONT
1.5 D		94-97	5035.27	**CA009**	FRONT
BERLINGO					
1.1 i (MFHDZ)		96->	5035.27	**CA009**	FRONT
1.4 i (MFKFX)		96->	5035.27	**CA009**	FRONT
1.8 i (MFLFX)		97->	5035.27	**CA009**	FRONT
1.9 D (MFDJY - MFWJZ)		96->	5035.27	**CA009**	FRONT
BERLINGO furgonato					
1.1 i (MAHDZ, MBHDZ)		96->	5035.27	**CA009**	FRONT
1.4 i (MBKFX)		96->	5035.27	**CA009**	FRONT
1.8 D (MBA9A, MCA9A)		96->	5035.27	**CA009**	FRONT
1.9 D		96->	5035.27	**CA009**	FRONT

follow CITROEN

MODELLO MODEL	DIMENSIONI DIMENSIONS	ANNO YEAR	RIF ORIGINALE ORIGINAL REF	RIF CORAM CORAM REF	NOTE NOTES
BX					
1.1		86-92	75472408	**CA008**	ANTERIORE/POSTERIORE
1.4		89-93	75472408	**CA008**	ANTERIORE/POSTERIORE
1.4 E		82-93	75472408	**CA008**	ANTERIORE/POSTERIORE
1.5		87-92	75472408	**CA008**	ANTERIORE/POSTERIORE
1.6		82-93	75472408	**CA008**	ANTERIORE/POSTERIORE
1.6 E		89-93	75472408	**CA008**	ANTERIORE/POSTERIORE
1.8 D		85-93	75472408	**CA008**	ANTERIORE/POSTERIORE
1.9		86-89	75472408	**CA008**	ANTERIORE/POSTERIORE
1.9 D		83-93	75472408	**CA008**	ANTERIORE/POSTERIORE
1.9 E		88-93	75472408	**CA008**	ANTERIORE/POSTERIORE
1.9 E 4x4		89-93	75472408	**CA008**	ANTERIORE/POSTERIORE
1.9 GTi		86-93	75472408	**CA008**	ANTERIORE/POSTERIORE
1.9 GTi 16V		87-93	75472408	**CA008**	ANTERIORE/POSTERIORE
1.9 GTi 4x4		88-93	75472408	**CA008**	ANTERIORE/POSTERIORE
TRD Turbo		88-93	75472408	**CA008**	ANTERIORE/POSTERIORE
BX Break					
1.4		89-93	75472408	**CA008**	ANTERIORE/POSTERIORE
1.5		87-92	75472408	**CA008**	ANTERIORE/POSTERIORE
1.6		85-94	75472408	**CA008**	ANTERIORE/POSTERIORE
1.8 D		85-93	75472408	**CA008**	ANTERIORE/POSTERIORE
1.9		86-94	75472408	**CA008**	ANTERIORE/POSTERIORE
1.9 4x4		90-91	75472408	**CA008**	ANTERIORE/POSTERIORE
1.9 Cat.		86-94	75472408	**CA008**	ANTERIORE/POSTERIORE
1.9 D		83-94	75472408	**CA008**	ANTERIORE/POSTERIORE
TRD Turbo		88-94	75472408	**CA008**	ANTERIORE/POSTERIORE
C1					
1.0 - 1.4 Hdi		mag-14	5035.57	**CA032**	
C1 II					
1.0 VTi 72		18->	5035.57	**CA032**	
C15					
1.8 D		86-00	5035.27	**CA009**	FRONT

follow CITROEN

MODELLO MODEL	DIMENSIONI DIMENSIONS	ANNO YEAR	RIF ORIGINALE ORIGINAL REF	RIF CORAM CORAM REF	NOTE NOTES
C15 (VD-_) furgonato					
1.0		84-97	75472408	**CA008**	ANTERIORE/POSTERIORE
1.1		84-96	75472408	**CA008**	ANTERIORE/POSTERIORE
1.1 i		88-96	75472408	**CA008**	ANTERIORE/POSTERIORE
1.4 - 1.4 E		87-96	75472408	**CA008**	ANTERIORE/POSTERIORE
1.4 i		91-96	75472408	**CA008**	ANTERIORE/POSTERIORE
1.8 D		86-00	75472408	**CA008**	ANTERIORE/POSTERIORE
C4 Grand Picasso II					
1.6 HDi / BlueHDi 115 - 1.6 HDi 90 - 1.6 THP 155 - 1.6 VTi 120		13->	9800480380	**CA039**	
2.0 BlueHDi 115		13->	9800480380	**CA039**	
C4 Picasso II					
1.6 HDi / BlueHDi 115 - 1.6 HDi 90 - 1.6 THP 155 - 1.6 VTi 120		13->	9800480380	**CA039**	
2.0 BlueHDi 115		13->	9800480380	**CA039**	
C8					
2,0 16V		05->	5035 55	**CA014**	FRONT
2.0		02->	5035.29	**CA014**	FRONT
2.0 HDi		02->	5035.29	**CA014**	FRONT
2.0 Hdi 135 - 2,0 Hdi 165		06->	5035 55	**CA014**	FRONT
2.0 Hdi 165		06->	5035 55	**CA014**	FRONT
2.2 - 2.2 HDi		02->	5035.29	**CA014**	FRONT
3.0 V6		02->	5035.29	**CA014**	FRONT
CX I					
2.0		74-85	75472408	**CA008**	ANTERIORE/POSTERIORE
2.2		74-85	75472408	**CA008**	ANTERIORE/POSTERIORE
2.2 D		75-79	75472408	**CA008**	ANTERIORE/POSTERIORE
2.4		76-82	75472408	**CA008**	ANTERIORE/POSTERIORE
2.4 GTi		77-82	75472408	**CA008**	ANTERIORE/POSTERIORE
2.5 D		78-82	75472408	**CA008**	ANTERIORE/POSTERIORE
2.5 D Turbo		83-85	75472408	**CA008**	ANTERIORE/POSTERIORE
2.5 GTi Turbo 2		84-85	75472408	**CA008**	ANTERIORE/POSTERIORE
2.5 TRi		83-85	75472408	**CA008**	ANTERIORE/POSTERIORE

follow CITROEN

MODELLO MODEL	DIMENSIONI DIMENSIONS	ANNO YEAR	RIF ORIGINALE ORIGINAL REF	RIF CORAM CORAM REF	NOTE NOTES
CX II					
2.0 RE		85-92	75472408	**CA008**	ANTERIORE/POSTERIORE
2.2 TRS		85-89	75472408	**CA008**	ANTERIORE/POSTERIORE
2.5 D		85-92	75472408	**CA008**	ANTERIORE/POSTERIORE
2.5 D Turbo		85-92	75472408	**CA008**	ANTERIORE/POSTERIORE
2.5 GTi		86-92	75472408	**CA008**	ANTERIORE/POSTERIORE
2.5 GTi Turbo 2		85-92	75472408	**CA008**	ANTERIORE/POSTERIORE
2.5 TRi		85-92	75472408	**CA008**	ANTERIORE/POSTERIORE
EVASION					
1.8		97-02	5035.29	**CA014**	FRONT
1.9		95-98	5035.29	**CA014**	FRONT
1.9 TD		94-02	5035.29	**CA014**	FRONT
2.0		94-02	5035.29	**CA014**	FRONT
2.0 16 V		98-02	5035.29	**CA014**	FRONT
2.0 HDI		99-02	5035.29	**CA014**	FRONT
2.0 TD		97-02	5035.29	**CA014**	FRONT
2.0 Turbo C.T.		94-02	5035.29	**CA014**	FRONT
2.1 TD		96-02	5035.29	**CA014**	FRONT
JUMPER Autobus					
1.9 D		99-02	5035.30	**CA012**	FRONT
1.9 TD		94-02	5035.30	**CA012**	FRONT
1.9 TD 4x4		96-02	5035.30	**CA012**	FRONT
2.0		94-02	5035.30	**CA012**	FRONT
2.0 4x4		86-02	5035.30	**CA012**	FRONT
2.5 D		94-02	5035.30	**CA012**	FRONT
2.5 D 4x4		94-02	5035.30	**CA012**	FRONT
2.5 TD		94-02	5035.30	**CA012**	FRONT
2.5 TD 4x4		96-02	5035.30	**CA012**	FRONT
2.5 TDI		96-00	5035.30	**CA012**	FRONT
2.5 TDI 4x4		96-00	5035.30	**CA012**	FRONT
2.8 HDI		00-02	5035.30	**CA012**	FRONT
2.8 HDI 4x4		00-02	5035.30	**CA012**	FRONT

follow CITROEN

MODELLO MODEL	DIMENSIONI DIMENSIONS	ANNO YEAR	RIF ORIGINALE ORIGINAL REF	RIF CORAM CORAM REF	NOTE NOTES
JUMPER Furgonato					
1.9 D		94-02	5035.30	**CA012**	FRONT
1.9 TD		94-02	5035.30	**CA012**	FRONT
2.0		94-02	5035.30	**CA012**	FRONT
2.0 HDI		01->	5035.30	**CA012**	FRONT
2.5 D		94-02	5035.30	**CA012**	FRONT
2.5 D 4x4		00-02	5035.30	**CA012**	FRONT
2.5 TD		94-02	5035.30	**CA012**	FRONT
2.5 TDI		96-01	5035.30	**CA012**	FRONT
2.5 TDI 4x4		00-00	5035.30	**CA012**	FRONT
2.8 HDI		00-02	5035.30	**CA012**	FRONT
2.8 HDI 4x4		00-02	5035.30	**CA012**	FRONT
JUMPER Pianale piatto/Autotelaio					
1.9 TD		94-02	5035.30	**CA012**	FRONT
2.0		94-02	5035.30	**CA012**	FRONT
2.5 D		94-02	5035.30	**CA012**	FRONT
2.5 D 4x4		00-02	5035.30	**CA012**	FRONT
2.5 TD		94-02	5035.30	**CA012**	FRONT
2.5 TDI		96-02	5035.30	**CA012**	FRONT
2.5 TDI 4x4		00-02	5035.30	**CA012**	FRONT
2.8 HDI		00-02	5035.30	**CA012**	FRONT
JUMPY					
1.6		95->00	5035.29	**CA014**	FRONT
1.6 Hdi 90 16V		07->	5035 55	**CA014**	FRONT
1.6 Hdi 90 8V		07->	5035 55	**CA014**	FRONT
1.9 D - 1.9 TD		95->03	5035.29	**CA014**	FRONT
1.9 D 70		98-03	5035 55	**CA014**	FRONT
2.0 - 2.0 Hdi 110		00->06	5035.29	**CA014**	FRONT
2.0 HDi		99->	5035.29	**CA014**	FRONT
2.0 Hdi 120		07->	5035 55	**CA014**	FRONT
2.0 Hdi 125		11->	5035 55	**CA014**	FRONT
2.0 Hdi 140		07->	5035 55	**CA014**	FRONT
2.0 Hdi 165		10->	5035 55	**CA014**	FRONT
2.0 Hdi 95		11->	5035 55	**CA014**	FRONT
2.0 Hdi 95		99-06	5035 55	**CA014**	FRONT
2.0 i		07->	5035 55	**CA014**	FRONT
2.0 i 16V		00->	5035.29	**CA014**	FRONT

follow CITROEN

MODELLO MODEL	DIMENSIONI DIMENSIONS	ANNO YEAR	RIF ORIGINALE ORIGINAL REF	RIF CORAM CORAM REF	NOTE NOTES
JUMPY Furgonato					
1.6 Hdi 90 16V - 2.0 i		07->	5035 55	**CA014**	FRONT
1.6 Hdi 90 8V		07->	5035 55	**CA014**	FRONT
1.6 i		95->	5035.29	**CA014**	FRONT
1.9 D		98->	5035.29	**CA014**	FRONT
1.9 TD		95->	5035.29	**CA014**	FRONT
2.0 Hdi		99->	5035.29	**CA014**	FRONT
2.0 Hdi 120		07->	5035 55	**CA014**	FRONT
2.0 Hdi 125		11->	5035 55	**CA014**	FRONT
2.0 Hdi 140		07->	5035 55	**CA014**	FRONT
2.0 Hdi 165		10->	5035 55	**CA014**	FRONT
2.0 Hdi 95		11->	5035 55	**CA015**	FRONT
2.0 i 16V		00-06	5035.29	**CA014**	FRONT
JUMPY Pianale piatto/Autotelaio					
1.9 TD		99-06	5035.29	**CA014**	FRONT
2.0 Hdi 95		99-06	5035.29	**CA014**	FRONT
SAXO					
1.0 X		96->	5035.27	**CA009**	FRONT
1.1 X, SX		96->	5035.27	**CA009**	FRONT
1.4 VTS		96->	5035.27	**CA009**	FRONT
1.5 D		96->	5035.27	**CA009**	FRONT
1.6 VTL, VTR, VTS		96->	5035.27	**CA009**	FRONT
VISA					
1.4		84-91	5035.27	**CA009**	FRONT
1.4 GT		82-91	5035.27	**CA009**	FRONT
1.7 D		84-91	5035.27	**CA009**	FRONT

follow CITROEN

MODELLO MODEL	DIMENSIONI DIMENSIONS	ANNO YEAR	RIF ORIGINALE ORIGINAL REF	RIF CORAM CORAM REF	NOTE NOTES
XANTIA (X1)					
1.6 i		93-98	75472408	**CA008**	ANTERIORE/POSTERIORE
1.8 i		93-98	75472408	**CA008**	ANTERIORE/POSTERIORE
1.8 i 16V		95-98	75472408	**CA008**	ANTERIORE/POSTERIORE
1.9 D		94-98	75472408	**CA008**	ANTERIORE/POSTERIORE
1.9 SD		96-98	75472408	**CA008**	ANTERIORE/POSTERIORE
1.9 Turbo D		94-98	75472408	**CA008**	ANTERIORE/POSTERIORE
2.0 i		93-98	75472408	**CA008**	ANTERIORE/POSTERIORE
2.0 i 16V		93-98	75472408	**CA008**	ANTERIORE/POSTERIORE
2.0 Turbo		95-98	75472408	**CA008**	ANTERIORE/POSTERIORE
2.1 Turbo D 12V		95-98	75472408	**CA008**	ANTERIORE/POSTERIORE
3.0 i 24V		97-98	75472408	**CA008**	ANTERIORE/POSTERIORE
XANTIA (X2)					
1.8 i		98->	75472408	**CA008**	ANTERIORE/POSTERIORE
1.8 i 16V		98->	75472408	**CA008**	ANTERIORE/POSTERIORE
1.9 SD		98->	75472408	**CA008**	ANTERIORE/POSTERIORE
1.9 Turbo D		98->	75472408	**CA008**	ANTERIORE/POSTERIORE
2.0 HDI 109		99->	75472408	**CA008**	ANTERIORE/POSTERIORE
2.0 HDI 90		99->	75472408	**CA008**	ANTERIORE/POSTERIORE
2.0 i		98->	75472408	**CA008**	ANTERIORE/POSTERIORE
2.0 i 16V		98->	75472408	**CA008**	ANTERIORE/POSTERIORE
2.0 Turbo		98->	75472408	**CA008**	ANTERIORE/POSTERIORE
2.1 Turbo D 12V		98->	75472408	**CA008**	ANTERIORE/POSTERIORE
3.0 V6		98->	75472408	**CA008**	ANTERIORE/POSTERIORE
XM (Y3)					
2.0 i		89-94	75472408	**CA008**	ANTERIORE/POSTERIORE
2.0 i Turbo		92-94	75472408	**CA008**	ANTERIORE/POSTERIORE
2.1 D 12V		89-94	75472408	**CA008**	ANTERIORE/POSTERIORE
2.1 TD 12V		89-94	75472408	**CA008**	ANTERIORE/POSTERIORE
3.0 V6		89-94	75472408	**CA008**	ANTERIORE/POSTERIORE
3.0 V6 24V		90-94	75472408	**CA008**	ANTERIORE/POSTERIORE
XM (Y4)					
2.0 i 16V		94-00	75472408	**CA008**	ANTERIORE/POSTERIORE
2.0 Turbo		94-00	75472408	**CA008**	ANTERIORE/POSTERIORE
2.1 TD 12V		94-00	75472408	**CA008**	ANTERIORE/POSTERIORE
2.5 TD		94-00	75472408	**CA008**	ANTERIORE/POSTERIORE
3.0 V6		94-00	75472408	**CA008**	ANTERIORE/POSTERIORE
3.0 V6 24V		94-00	75472408	**CA008**	ANTERIORE/POSTERIORE

follow CITROEN

MODELLO MODEL	DIMENSIONI DIMENSIONS	ANNO YEAR	RIF ORIGINALE ORIGINAL REF	RIF CORAM CORAM REF	NOTE NOTES
XSARA					
1.4 i		97->	5035.27	**CA009**	FRONT
1.5 D		97-00	5035.27	**CA009**	FRONT
1.6 i		97-00	5035.27	**CA009**	FRONT
1.8 D - 1.8 i - 1.8 i 16V - 1.8 i Aut. - 1.8 TD		97-00	5035.27	**CA009**	FRONT
1.9 D		97-00	5035.27	**CA009**	FRONT
1.9 SD		98-00	5035.27	**CA009**	FRONT
1.9 TD		97-00	5035.27	**CA009**	FRONT
2.0 16V		97-00	5035.27	**CA009**	FRONT
2.0 Hdi 90		99->	5035.27	**CA009**	FRONT
XSARA Break					
1.4 i		97->	5035.27	**CA009**	FRONT
1.5 D		97-00	5035.27	**CA009**	FRONT
1.6 i		97-00	5035.27	**CA009**	FRONT
1.8 D - 1.8 i - 1.8 i 16V - 1.8 i Aut.		97-00	5035.27	**CA009**	FRONT
1.9 D - 1.9 TD		97-00	5035.27	**CA009**	FRONT
2.0 16V		98-00	5035.27	**CA009**	FRONT
2.0 HDI 90		99->	5035.27	**CA009**	FRONT
ZX					
1.1		91-97	5035.27	**CA009**	FRONT
1.4 - 1.4 i		91-97	5035.27	**CA009**	FRONT
1.6 i		91-97	5035.27	**CA009**	FRONT
1.8 i		92-97	5035.27	**CA009**	FRONT
1.9 D- 1.9 i		91-97	5035.27	**CA009**	FRONT
1.9 TD		92-97	5035.27	**CA009**	FRONT
2.0 i		92-97	5035.27	**CA009**	FRONT
2.0 i 16V		92-97	5035.27	**CA009**	FRONT
ZX Break					
1.4 i - 1.6 i - 1.8 i		93-97	5035.27	**CA009**	FRONT
1.9 D - 1.9 TD		93-97	5035.27	**CA009**	FRONT

DAIHATSU

MODELLO MODEL	DIMENSIONI DIMENSIONS	ANNO YEAR	RIF ORIGINALE ORIGINAL REF	RIF CORAM CORAM REF	NOTE NOTES
CHARADE					
1.33 16V		11->	5035.57	**CA032**	

FIAT					
MODELLO MODEL	**DIMENSIONI DIMENSIONS**	**ANNO YEAR**	**RIF ORIGINALE ORIGINAL REF**	**RIF CORAM CORAM REF**	**NOTE NOTES**
128					
1.1		69-84	91537289	**CA009**	FRONT
500					
0.9 1.3 D Multijet		10->
16->	5035.57 5035.57	**CA032** **CA032**	
500C					
0.9 - 1.2 - 1-3 D Multijet - 1.4		09->	5035.57	**CA032**	
500X					
1.3 Multijet - 1.4 - 1.6 - 1.6 D Multijet - 2.0 D Multijet 4x4 1.4 4x4 1.4 LPG		14->
15->
17->	52042666 52042666 52042666	**CA040** **CA040** **CA040**	
ARGENTA (132A)					
1600 1600 2000 2000 i.e. 2000 Volumex 2500 Diesel 2500 Turbodiesel		81-85 81-85 78-85 81-86 84-85 81-85 83-85	4400895 4400895 4400895 4400895 4400895 4400895 4400895	**CA015** **CA015** **CA015** **CA015** **CA015** **CA015** **CA015**	FRONT FRONT FRONT FRONT FRONT FRONT FRONT
BRAVA					
1.4 12V - 1.6 16V		95-01	7601502	**CA006**	FRONT
BRAVO					
2.0 HGT 20V (182.AD, 182AQ)		95-01	60806398	**CA005**	FRONT
BRAVO I					
1.4 - 1.6 16V - 2.0 HGT 20V		95-01	7601502	**CA006**	FRONT
COUPE'					
1.8 16V 2.0 16V - 2.0 16V Turbo 2.0 20V - 2.0 20V Turbo		96->
93-96
96-98	60806398 60806398 60806398	**CA006** **CA006** **CA006**	FRONT FRONT FRONT

follow FIAT

MODELLO MODEL	DIMENSIONI DIMENSIONS	ANNO YEAR	RIF ORIGINALE ORIGINAL REF	RIF CORAM CORAM REF	NOTE NOTES
CROMA					
1.8 16V - 2.2 16V - 2.4 D Multijet		05->	344538	**CA037**	
1.9 D		05-nov	344538	**CA037**	
DUCATO Autobus					
1.9 D		98-02	1318573080	**CA012**	FRONT
1.9 D Combinato		95-02	1318573080	**CA012**	FRONT
1.9 TD		98-02	1318573080	**CA012**	FRONT
1.9 TD Combinato		94-02	1318573080	**CA012**	FRONT
1.9 TD Panorama/Combinato		94-02	1318573080	**CA012**	FRONT
2.0 JTD		01-feb	1318573080	**CA012**	FRONT
2.0 Panorama/Combinato		94-02	1318573080	**CA012**	FRONT
2.5 D Combinato		94-02	1318573080	**CA012**	FRONT
2.5 TDI 4x4		97-02	1318573080	**CA012**	FRONT
2.5 TDI Combinato		94-02	1318573080	**CA012**	FRONT
2.5 TDI Panorama/Combinato		94-02	1318573080	**CA012**	FRONT
2.8 D		98-02	1318573080	**CA012**	FRONT
2.8 JTD		00-02	1318573080	**CA012**	FRONT
2.8 JTD 4x4		00-02	1318573080	**CA012**	FRONT
2.8 TDI		97-02	1318573080	**CA012**	FRONT
2.8 TDI 4x4		99-02	1318573080	**CA012**	FRONT
DUCATO Furgonato					
1.9 D		94-02	1318573080	**CA012**	FRONT
1.9 TD		94-02	1318573080	**CA012**	FRONT
1.9 TD CAT		94-02	1318573080	**CA012**	FRONT
2.0		94-02	1318573080	**CA012**	FRONT
2.0 JTD		01-feb	1318573080	**CA012**	FRONT
2.5 D		94-02	1318573080	**CA012**	FRONT
2.5 TDI		94-02	1318573080	**CA012**	FRONT
2.5 TDI 4x4		98-02	1318573080	**CA012**	FRONT
2.5 TDI Maxi		94-02	1318573080	**CA012**	FRONT
2.8 D		98-02	1318573080	**CA012**	FRONT
2.8 D 4x4		98-02	1318573080	**CA012**	FRONT
2.8 JTD		00-02	1318573080	**CA012**	FRONT
2.8 JTD 4x4		00-02	1318573080	**CA012**	FRONT
2.8 TDI		97-02	1318573080	**CA012**	FRONT
2.8 TDI 4x4		99-02	1318573080	**CA012**	FRONT

follow FIAT

MODELLO MODEL	DIMENSIONI DIMENSIONS	ANNO YEAR	RIF ORIGINALE ORIGINAL REF	RIF CORAM CORAM REF	NOTE NOTES
DUCATO Pianale piatto/Autotelaio					
1.9 D		94-02	1318573080	**CA012**	FRONT
1.9 TD		94-02	1318573080	**CA012**	FRONT
1.9 TD CAT		94-02	1318573080	**CA012**	FRONT
2.0		98-02	1318573080	**CA012**	FRONT
2.0 4x4		98-02	1318573080	**CA012**	FRONT
2.5 D		94-02	1318573080	**CA012**	FRONT
2.5 D 4x4		94-02	1318573080	**CA012**	FRONT
2.5 TDI		94-02	1318573080	**CA012**	FRONT
2.5 TDI 4x4		98-02	1318573080	**CA012**	FRONT
2.8 D		98-02	1318573080	**CA012**	FRONT
2.8 JTD		00-02	1318573080	**CA012**	FRONT
2.8 TDI		98-02	1318573080	**CA012**	FRONT
DUNA (146 B)					
1.1 60		87-91	4400895	**CA015**	FRONT
1.3 70		87-91	4400895	**CA015**	FRONT
1.7 DS		87-91	4400895	**CA015**	FRONT
DUNA Weekend (146 B)					
1.1 60		87-91	4400895	**CA015**	FRONT
1.3 70		87-91	4400895	**CA015**	FRONT
1.7 DS		87-91	4400895	**CA015**	FRONT
FIORINO (147)					
1.0		86-88	4400895	**CA015**	FRONT
1.1 60		86-88	4400895	**CA015**	FRONT
1.3		87-93	4400895	**CA015**	FRONT
1.3 Diesel		82-87	4400895	**CA015**	FRONT
1.5		88-93	4400895	**CA015**	FRONT
1.7 Diesel		88->	4400895	**CA015**	FRONT
1.7 Diesel		87-90	4400895	**CA015**	FRONT
FIORINO Furgonato (146 Uno)					
1.1 (60)		88-93	4400895	**CA015**	FRONT
1.4 70 i.e.		94-01	4400895	**CA015**	FRONT
1.5 75 i.e.		88-93	4400895	**CA015**	FRONT
1.6 75 i.e.		93-01	4400895	**CA015**	FRONT
1.7 D (60)		88-00	4400895	**CA015**	FRONT
1.7 D (60)		88-86	4400895	**CA015**	FRONT

follow FIAT

MODELLO MODEL	DIMENSIONI DIMENSIONS	ANNO YEAR	RIF ORIGINALE ORIGINAL REF	RIF CORAM CORAM REF	NOTE NOTES
IDEA					
1.2 16V - 1.3 D Multijet - 1.4 16V - 1.9 JTD		04->	5035.57	**CA032**	
1.4		03->	5035.57	**CA032**	
MULTIPLA					
1.6		00-06	5535 55	**CA014**	FRONT
1.6 100 16V (186AXA1A)		99->	1303672080	**CA014**	FRONT
1.6 16V Bipower (186AMB1A)		99->	1303672080	**CA014**	FRONT
1.6 16V Blupower (186AMA1A)		99->	1303672080	**CA014**	FRONT
1.9 JTD 105 (186AXB1A)		99->	1303672080	**CA014**	FRONT
1.9 JTD 110		01-feb	1303672080	**CA014**	FRONT
1.9 JTD 115		02->	1303672080	**CA014**	FRONT
PANDA (141A_)					
1000		85-92	4400895	**CA015**	FRONT
1000 4x4		86-94	4400895	**CA015**	FRONT
1000 i.e. Cat.		87-98	4400895	**CA015**	FRONT
1300 D		86-92	4400895	**CA015**	FRONT
650		82->	4400895	**CA015**	FRONT
750 (141AA)		86-95	4400895	**CA015**	FRONT
800		81-85	4400895	**CA015**	FRONT
900		92-96	4400895	**CA015**	FRONT
900		80-94	4400895	**CA015**	FRONT
950 4x4		83-86	4400895	**CA015**	FRONT
PANDA / PANDA CLASSIC					
1.1		03->	5035.57	**CA032**	
1.2		mar-13	5035.57	**CA032**	
1.2 4x4 - 1.3 D Multijet 4x4		04->	5035.57	**CA032**	
1.2 LPG		set-13	5035.57	**CA032**	
1.2 Natural Power		07-nov	5035.57	**CA032**	
1.3 D Multijet		mar-13	5035.57	**CA032**	
1.3 JTD Multijet 4x4 - 1.4 Natural Power		ott-13	5035.57	**CA032**	
1.4		06->	5035.57	**CA032**	
PANDA Van					
1.1 - 1.2 - 1.2 4x4 - 1.3 D Multijet - 1.3 D Multijet 4x4		04->	5035.57	**CA032**	
1.2 LPG - 1.4 Natural Power		09->	5035.57	**CA032**	
1.2 Natural Power		07-set	5035.57	**CA032**	
1000		86-92	4400895	**CA015**	FRONT

follow FIAT

MODELLO MODEL	DIMENSIONI DIMENSIONS	ANNO YEAR	RIF ORIGINALE ORIGINAL REF	RIF CORAM CORAM REF	NOTE NOTES
PUNTO					
1.2 16V 80		99-06	5035.57	**CA032**	
1.2 60		99-10	5035.57	**CA032**	
1.2 Bifuel		07-dic	5035.57	**CA032**	
1.2 Natural Power - 1.3 JTD 16V - 1.4		mar-13	5035.57	**CA032**	
1.8 120 HGT - 1.9 DS 60 - 1.9 JTD 80		99-12	5035.57	**CA032**	
1.9 JTD		01-dic	5035.57	**CA032**	
PUNTO Van					
1.2 60 - 1.9 D 60 - 1.9 JTD		00-09	5035.57	**CA032**	
REGATA (138)					
1.3 70		83-89	4400895	**CA015**	FRONT
1.5 75		83-87	4400895	**CA015**	FRONT
1.5 75 i.e.		85-89	4400895	**CA015**	FRONT
1.5 85		85-87	4400895	**CA015**	FRONT
1.5 85 Super		83-85	4400895	**CA015**	FRONT
1.6 100 Super		83-90	4400895	**CA015**	FRONT
1.6 85		83-90	4400895	**CA015**	FRONT
1.7 60 Diesel		83-89	4400895	**CA015**	FRONT
1.9 65 Diesel		84-89	4400895	**CA015**	FRONT
1.9 80 Turbo Diesel		86-89	4400895	**CA015**	FRONT
REGATA Weekend					
1.3 70		84-89	4400895	**CA015**	FRONT
1.5 75		84-89	4400895	**CA015**	FRONT
1.5 85		84-89	4400895	**CA015**	FRONT
1.6 90 i.e.		87-89	4400895	**CA015**	FRONT
1.6 (RF) 100		84-86	4400895	**CA015**	FRONT
1.7 60 Diesel		84-89	4400895	**CA015**	FRONT
1.9 65 Diesel		84-89	4400895	**CA015**	FRONT
1.9 80 Turbo Diesel		86-89	4400895	**CA015**	FRONT
RITMO Bertone Cabriolet					
1.5 85		80-89	4400895	**CA015**	FRONT
1.6 100		85-87	4400895	**CA015**	FRONT

follow FIAT

MODELLO MODEL	DIMENSIONI DIMENSIONS	ANNO YEAR	RIF ORIGINALE ORIGINAL REF	RIF CORAM CORAM REF	NOTE NOTES
RITMO I (138A)					
1.0 60		78-82	4400895	**CA015**	FRONT
1.3 65		78-82	4400895	**CA015**	FRONT
1.3 70		83-85	4400895	**CA015**	FRONT
1.3 75		81-82	4400895	**CA015**	FRONT
1.5 75		78-82	4400895	**CA015**	FRONT
1.5 75 i.e.		85-87	4400895	**CA015**	FRONT
1.5 85		81-82	4400895	**CA015**	FRONT
1.6 105 Sport		81-82	4400895	**CA015**	FRONT
1.7 55 Diesel		79-82	4400895	**CA015**	FRONT
2.0 125 TC Abarth		81-82	4400895	**CA015**	FRONT
RITMO II (138A)					
1.1 60		82-87	4400895	**CA015**	FRONT
1.3 70		83-85	4400895	**CA015**	FRONT
1.5 75 Cat.		85-88	4400895	**CA015**	FRONT
1.5 85		83-87	4400895	**CA015**	FRONT
1.6 100		83-87	4400895	**CA015**	FRONT
1.6 105		83-87	4400895	**CA015**	FRONT
1.7 60 Diesel		82-87	4400895	**CA015**	FRONT
1.9 80 Turbo Diesel		85-87	4400895	**CA015**	FRONT
2.0 130 TC Abarth		83-87	4400895	**CA015**	FRONT
SCUDO Combinato					
1.6		96-06	1303672080	**CA014**	FRONT
1.9 D		96-98	1303672080	**CA014**	FRONT
1.9 TD - 1.9 TD Eco		96-06	1303672080	**CA014**	FRONT
2.0 16V		96-06	1303672080	**CA014**	FRONT
2.0 JTD		96-06	1303672080	**CA014**	FRONT
SCUDO Furgonato					
1.6		96->	1303672080	**CA014**	FRONT
1.9 D - 1.9 TD		96-06	1303672080	**CA014**	FRONT
2		00-06	5535 55	**CA014**	FRONT
2.0 JTD		99-06	1303672080	**CA014**	FRONT

follow FIAT

MODELLO MODEL	DIMENSIONI DIMENSIONS	ANNO YEAR	RIF ORIGINALE ORIGINAL REF	RIF CORAM CORAM REF	NOTE NOTES
TEMPRA					
1.4 i.e. (159 AC) - 1.4 i.e. (159.AC, 159.AX)		91-96	60806398	**CA006**	FRONT
1.6		90-93	60806398	**CA006**	FRONT
1.6 i.e. (159.AE) - 1.6 i.e (159.AJ)		90-96	60806398	**CA006**	FRONT
1.6 i.e. (159.AS, 159.AT)		92-96	60806398	**CA006**	FRONT
1.8 i.e. (159.AN) - 1.8 i.e. (159.AV)		90-96	60806398	**CA006**	FRONT
1.8 i.e. (159.AZ) - 1.8 i.e. (159.BY)		93-96	60806398	**CA006**	FRONT
1.9 D (159.AG) - 1.9 TD (159.AQ)		91-96	60806398	**CA006**	FRONT
1.9 TD (159.CU, 159.AU, 159.AI, 159.BI)		90-96	60806398	**CA006**	FRONT
2.0 i.e (159.AP)		90-96	60806398	**CA006**	FRONT
TEMPRA S.W.					
1.4 i.e. (159.AC) - 1.4 i.e. (159.AC, 159.AX)		91-96	60806398	**CA006**	FRONT
1.6		90-93	60806398	**CA006**	FRONT
1.6 i.e.(159.AE) - 1.6 i.e. (159.AJ)		90-96	60806398	**CA006**	FRONT
1.6 i.e.(159.AS, 159.AT)		92-96	60806398	**CA006**	FRONT
1.8 i.e.(159.AN) - 1.8 i.e.(159.AV)		90-96	60806398	**CA006**	FRONT
1.8 i.e.(159.AZ) - 1.8 i.e.(159.BY)		93-96	60806398	**CA006**	FRONT
1.9 D (159.AG) - 1.9 TD (159.AQ)		91-96	60806398	**CA006**	FRONT
1.9 TD (159.AI, 159.BI, 159.CU, 159.AU)		91-95	60806398	**CA006**	FRONT
2.0 i.e. (159.AP) - 2.0 i.e. 4x4 (159.AP)		91-95	60806398	**CA006**	FRONT
TIPO					
1.1 (160.AA)		88-91	60806398	**CA006**	FRONT
1.4 (160.AC) - 1.4 i.e.		87-95	60806398	**CA006**	FRONT
1.4 i.e (160.AP, 160.AD, 160.EA)		89-95	60806398	**CA006**	FRONT
1.6 (160.AE) - 1.6 i.e.		88-91	60806398	**CA006**	FRONT
1.6 i.e. (160.A1, 160.EC, 160.EB)		92-95	60806398	**CA006**	FRONT
1.6 i.e. (160.AF)		90-93	60806398	**CA006**	FRONT
1.7 D (160.AG)		88-94	60806398	**CA006**	FRONT
1.8 i.e. - 1.8 i.e. (160.AM)		90-95	60806398	**CA006**	FRONT
1.8 i.e. (160.AY) - 1.8 i.e. (160.ED)		90-95	60806398	**CA006**	FRONT
1.8 i.e. 16V Sport		89-92	60806398	**CA006**	FRONT
1.9 D		91-96	60806398	**CA006**	FRONT
1.9 TD (160.AW)		92-93	60806398	**CA006**	FRONT
1.9 TD (160.EL, 160.GL, 160.AQ,160.EI,160.AR)		90-95	60806398	**CA006**	FRONT
2.0 16V (160.AV)		91-95	60806398	**CA006**	FRONT
2.0 i.e. (160.AT, 160.AJ)		90-95	60806398	**CA006**	FRONT
2.0 i.e. 16V Sport (160.EF)		93-95	60806398	**CA006**	FRONT

follow FIAT

MODELLO MODEL	DIMENSIONI DIMENSIONS	ANNO YEAR	RIF ORIGINALE ORIGINAL REF	RIF CORAM CORAM REF	NOTE NOTES
ULYSSE					
1.8 (220.BB5)		97-02	1303672080	**CA014**	FRONT
1.9 TD (220AH5)		95-02	1303672080	**CA014**	FRONT
2		02-nov	5535 55	**CA014**	FRONT
2,0 D Multijet		06-nov	5535 55	**CA014**	FRONT
2,0 Turbo		94-02	5535 55	**CA014**	FRONT
2,2 D Multijet		08-nov	5535 55	**CA014**	FRONT
2.0 (220.AC5)		94-02	1303672080	**CA014**	FRONT
2.0 16V		98-02	1303672080	**CA014**	FRONT
2.0 JTD		99-02	1303672080	**CA014**	FRONT
2.0 Turbo (220.AD5)		94-02	1303672080	**CA014**	FRONT
2.1 TD		96-99	1303672080	**CA014**	FRONT
2.2 JTD		02->	1303672080	**CA014**	FRONT
3.0 V6		02-nov	1303672080	**CA014**	FRONT
UNO (146A/E)					
0.9 45		83-92	4400895	**CA015**	FRONT
1.0 45 (146A.ED)		86-93	4400895	**CA015**	FRONT
1.0 45 i.e.		84-94	4400895	**CA015**	FRONT
1.1 50		86-93	4400895	**CA015**	FRONT
1.1 50 i.e.		92-93	4400895	**CA015**	FRONT
1.1 55		83-89	4400895	**CA015**	FRONT
1.1 60		89-92	4400895	**CA015**	FRONT
1.1 60 (146A.EG)		85-89	4400895	**CA015**	FRONT
1.3 70		83-89	4400895	**CA015**	FRONT
1.3 Super Diesel		83-92	4400895	**CA015**	FRONT
1.3 Turbo i.e.		85-91	4400895	**CA015**	FRONT
1.4 70 i.e.		89-93	4400895	**CA015**	FRONT
1.4 70 TD		86-90	4400895	**CA015**	FRONT
1.4 Turbo i.e.		89-93	4400895	**CA015**	FRONT
1.5 75 i.e.		85-93	4400895	**CA015**	FRONT
1.6		89-93	4400895	**CA015**	FRONT
1.6 R		92-95	4400895	**CA015**	FRONT
1.7 60 Diesel		86-93	4400895	**CA015**	FRONT
1.9 D		89-94	4400895	**CA015**	FRONT
45 (1464.ED)		86-93	4400895	**CA015**	FRONT

FORD					
MODELLO MODEL	DIMENSIONI DIMENSIONS	ANNO YEAR	RIF ORIGINALE ORIGINAL REF	RIF CORAM CORAM REF	NOTE NOTES
C-MAX					
1.6 - 1.6 TDCi - 1.8 - 1.8 Flexifuel - 1.8 TDCi - 2.0		07-ott	1223838	**CA027**	
2.0 CNG		09-ott	1223838	**CA027**	
2.0 LPG		08-ott	1223838	**CA027**	
2.0 TDCi		07-ott	1223838	**CA027**	
C-MAX II					
1.0 EcoBoost - 1.6 LPG		12->	1250820	**CA027**	
1.5 EcoBoost - 1.5 TDCi - 1.5 TDCi ECOnetic		15->	1250820	**CA027**	
1.6 EcoBoost - 1.6 TDCi - 1.6 Ti - 2.0 TDCi		10->	1250820	**CA027**	
1.6 Flexifuel		11->	1250820	**CA027**	
FOCUS C-MAX					
1.6 - 1.6 TDCi - 1.8 - 2.0 TDCi		03-lug	1255350	**CA027**	
1.6 Ti		04-lug	1255350	**CA027**	
1.8 Flexifuel		06-lug	1255350	**CA027**	
1.8 TDCi		05-lug	1255350	**CA027**	
2.0		04-lug	1255350	**CA027**	
FOCUS II					
2.0 TDCi		04-ago	1508111	**CA027**	
FOCUS II cabriolet					
1.6 - 2.0 - 2.0 TDCi		06-ott	1508111	**CA027**	
FOCUS II Tre volumi					
1.6 TDCi - 1.8 TDCi		05-dic	1508111	**CA027**	
FOCUS II Turnier					
1.6 LPG		09-dic	1508111	**CA027**	
1.6 TDCi		04-dic	1508111	**CA027**	
2.0 TDCi		04-ago	1508111	**CA027**	
FOCUS III					
1.0 EcoBoost - 1.6 LPG - 1.6 TDCi ECOnetic		12->	1674672	**CA027**	
1.5 EcoBoost - 1.5 TDCi - 1.5 TDCi ECOnetic - 2.0 TDCi ST		14->	1674672	**CA027**	
1.6 EcoBoost - 1.6 Flexifuel - 1.6 TDCi - 1.6 Ti - 2.0 TDCi		10->	1674672	**CA027**	
2.3 RS AWD		15->	1674672	**CA027**	

follow FORD

MODELLO MODEL	DIMENSIONI DIMENSIONS	ANNO YEAR	RIF ORIGINALE ORIGINAL REF	RIF CORAM CORAM REF	NOTE NOTES
FOCUS III CASSONE/coda spiovente					
1.6 TDCi		11->	1674672	**CA027**	
FOCUS III Electric					
Tutti i tipi/All types/Tous types		13->	1674672	**CA027**	
FOCUS III Tre volumi					
1.0 EcoBoost		12->	1695818	**CA027**	
1.5 EcoBoost - 1.5 TDCi - 1.5 TDCi ECOnetic		14->	1695818	**CA027**	
1.6 EcoBoost - 1.6 Flexifuel - 1.6 TDCi - 1.6 Ti - 2.0 TDCi		10->	1695818	**CA027**	
FOCUS III Turnier					
1.0 EcoBoost - 1.6 LPG - 1.6 TDCi ECOnetic - 2.0 ST		12->	1783331	**CA027**	
1.5 EcoBoost - 1.5 TDCi - 1.5 TDCi ECOnetic - 2.0 TDCi ST		14->	1783331	**CA027**	
1.6 EcoBoost - 1.6 Flexifuel - 1.6 TDCi - 1.6 Ti - 2.0 TDCi		10->	1783331	**CA027**	
GALAXY					
1.6 EcoBoost		ott-15	1801056	**CA025**	
1.6 TDCI		nov-15	1801056	**CA025**	
1.8 TDCI - 2.0 - 2.0 TDCi		giu-15	1801056	**CA025**	
1.9 TDI		95-00	7201688	**CA016**	FRONT
1.9 TDI		95-06	1102592	**CA020**	
2.0 EcoBoost		ott-15	1801056	**CA025**	
2.0 i		95->	7201688	**CA016**	FRONT
2.0 i		95-06	1102592	**CA020**	
2.2 TDCi		ago-15	1801056	**CA025**	
2.3		lug-15	1801056	**CA025**	
2.3 16V		97->	7201688	**CA016**	FRONT
2.3 16V		97-06	1102592	**CA020**	
2.8 i V6		95-00	7201688	**CA016**	FRONT
2.8 i V6		95-00	1102592	**CA020**	
2.8 i V6		95-00	1102592	**CA020**	
2.8 i V6 4x4		96-00	7201688	**CA016**	FRONT
2.8 i V6 4x4		96-00	1102592	**CA020**	
2.8 V6		00-06	1102592	**CA020**	
GRAND C-MAX					
1.0 EcoBoost		12->	1820399	**CA027**	
1.5 EcoBoost - 1.5 TDCi		15->	1820399	**CA027**	
1.6 EcoBoost - 1.6 TDCi - 1.6 Ti - 2.0 TDCi		10->	1820399	**CA027**	

follow FORD

MODELLO MODEL	DIMENSIONI DIMENSIONS	ANNO YEAR	RIF ORIGINALE ORIGINAL REF	RIF CORAM CORAM REF	NOTE NOTES
KUGA I					
2.0 TDCi		08-dic	1907038	**CA027**	
2.0 TDCi 4x4		08-dic	1907038	**CA027**	
2.5		09-dic	1907038	**CA027**	
2.5 4x4		08-dic	1907038	**CA027**	
KUGA II					
1.5 EcoBoost - 1.5 EcoBoost 4x4		14->	1907038	**CA027**	
1.5 TDCi		16->	1907038	**CA027**	
1.6 EcoBoost - 1.6 EcoBoost 4x4		12->	1907038	**CA027**	
2.0 TDCi - 2.0 TDCi 4x4		13->	1907038	**CA027**	
MONDEO IV					
1.6 EcoBoost - 1.6 TDCi		nov-15	1801056	**CA025**	
1.6 Ti - 1.8 TDCi - 2.0 - 2.0 TDCi		lug-15	1801056	**CA025**	
2.0 EcoBoost - 2.0 SCTi		ott-15	1801056	**CA025**	
2.0 Flexifuel		set-15	1801056	**CA025**	
2.2 TDCi		08-ott	1801056	**CA025**	
2.3 - 2.5		lug-15	1801056	**CA025**	
MONDEO IV Tre volumi					
1.6 TDCi		ott-15	1801056	**CA025**	
1.6 Ti - 1.8 TDCi - 2.0 - 2.0 TDCi		lug-15	1801056	**CA025**	
2.0 Flexifuel - 2.0 LPG		set-15	1801056	**CA025**	
2.2 TDCi		08-ott	1801056	**CA025**	
2.3 - 2.5		lug-15	1801056	**CA025**	
MONDEO IV Turnier					
1.6 EcoBoost - 1.6 TDCi		nov-15	1801056	**CA025**	
1.6 Ti - 2.0 - 2.0 TDCi		lug-15	1801056	**CA025**	
1.8 TDCi		07-dic	1801056	**CA025**	
2.0 EcoBoost - 2.0 SCTi		ott-15	1801056	**CA025**	
2.0 Flexifuel - 2.0 LPG		set-15	1801056	**CA025**	
2.2 TDCi		ago-15	1801056	**CA025**	
2.3		lug-15	1801056	**CA025**	
2.5		07-dic	1801056	**CA025**	

follow FORD

MODELLO MODEL	DIMENSIONI DIMENSIONS	ANNO YEAR	RIF ORIGINALE ORIGINAL REF	RIF CORAM CORAM REF	NOTE NOTES
MONDEO V 2 Volumi					
1.0 EcoBoost - 1.5 TDCi		15->	1801056	**CA025**	
1.5 EcoBoost - 2.0 EcoBoost - 2.0 TDCi		14->	1801056	**CA025**	
2.0 TDCi 4x4		15->	1801056	**CA025**	
MONDEO V Tre volumi					
2.0 EcoBoost - 2.0 TDCi - 2.0 TDCi 4x4		15->	1801056	**CA025**	
2.0 Hybrid		14->	1801056	**CA025**	
MONDEO V Turnier					
1.0 EcoBoost - 1.5 TDCi - 2.0 TDCi 4x4		15->	1801056	**CA025**	
1.5 EcoBoost - 2.0 EcoBoost - 2.0 TDCi		15->	1801056	**CA025**	
S-MAX					
1.6 EcoBoost - 1.6 TDCi		nov-14	2084212	**CA027**	
1.8 TDCi - 2.0		giu-14	2084212	**CA027**	
2.0 EcoBoost		ott-14	2084212	**CA027**	
2.0 Flexifuel - 2.0 TDCi		giu-14	2084212	**CA027**	
2.2 TDCi		ago-14	2084212	**CA027**	
2.3		lug-14	2084212	**CA027**	
2.5 ST		giu-14	2084212	**CA027**	
TOURNEO CONNECT/GRAND TOURNEO CONNECT Kombi					
1.0 EcoBoost - 1.6 EcoBoost - 1.6 TDCi		13->	2084212	**CA027**	
1.5 TDCi		15->	2084212	**CA027**	
TRANSIT CONNECT Furgonato					
1.0 EcoBoost - 1.6 EcoBoost - 1.6 TDCi		13->	2084212	**CA027**	
1.5 TDCi		15->	2084212	**CA027**	
TRANSIT CONNECT Station Wagon					
1.5 TDCi		15->	2084212	**CA027**	
1.6 TDCi		13->	2084212	**CA027**	

HONDA

MODELLO MODEL	DIMENSIONI DIMENSIONS	ANNO YEAR	RIF ORIGINALE ORIGINAL REF	RIF CORAM CORAM REF	NOTE NOTES
CR-Z					
1.5 Hybrid		10->	5035.57	**CA032**	
INSIGHT					
1.3 Hybrid		09->	5035.57	**CA032**	
JAZZ II					
1.2 i-DSI		02-ago	5035.57	**CA032**	
JAZZ III					
1.2 - 1.3 i 1.3 HYBRID		08->
11->	5035.57 5035.57	**CA032** **CA032**	
JAZZ IV					
1.3		15->	5035.57	**CA032**	

HYUNDAI

MODELLO MODEL	DIMENSIONI DIMENSIONS	ANNO YEAR	RIF ORIGINALE ORIGINAL REF	RIF CORAM CORAM REF	NOTE NOTES
i30					
1.4		nov-15	54612-3S000	**CA028**	
i30 Coupé					
1.4 - 1.4 CRDi - 1.6 CRDi - 1.6 GDI		13->	54612-3S000	**CA028**	
i31					
1.4 CRDi - 1.6 - 1.6 CRDi - 1.6 GDI		nov-16	54612-3S000	**CA028**	

JEEP

MODELLO MODEL	DIMENSIONI DIMENSIONS	ANNO YEAR	RIF ORIGINALE ORIGINAL REF	RIF CORAM CORAM REF	NOTE NOTES
RENEGADE Fuoristrada chiuso					
1.4 - 1.4 4x4 - 1.6 - 1.6 CRD - 2.0 CRD 4x4		14->	52042666	**CA040**	

LADA

MODELLO MODEL	DIMENSIONI DIMENSIONS	ANNO YEAR	RIF ORIGINALE ORIGINAL REF	RIF CORAM CORAM REF	NOTE NOTES
KALINA					
Tutti i tipi/All types/Tous types			118-2902840-01	**CA018**	
NIVA Fuoristrada chiuso					
1600		76-93	344505	**CA034**	
1600 4x4		87-95	344505	**CA034**	

LANCIA

MODELLO MODEL	DIMENSIONI DIMENSIONS	ANNO YEAR	RIF ORIGINALE ORIGINAL REF	RIF CORAM CORAM REF	NOTE NOTES
DEDRA					
1.6 16V (835EI)		96-99	60906398	**CA006**	FRONT
1.6 i.e. (835AB, 835AN)		89-99	60806398	**CA006**	FRONT
1.6 LE (835EB) Cat.		94-99	60806398	**CA006**	FRONT
1.8 16V LE(835FG)		96-99	60806398	**CA006**	FRONT
1.8 GT 16V (835EH)		96-99	60806398	**CA006**	FRONT
1.8 i.e. (835AT, 835BD, 835AD, 835FA)		89-99	60806398	**CA006**	FRONT
1.9 TDS (835EE, 835EF)		89-99	60806398	**CA006**	FRONT
2.0 16V (835ED)		94-99	60806398	**CA006**	FRONT
2.0 HF Integrale (835AP)		90-94	60806398	**CA006**	FRONT
2.0 i.e. Turbo Integrale (835AO)		90-94	60806398	**CA006**	FRONT
2.0 i.e.(835AL) - 2.0 i.e Turbo (835AR)		89-99	60806398	**CA006**	FRONT
2.0 Turbo (835AQ)		90-94	60806398	**CA006**	FRONT
DEDRA SW					
1.6 (835EB)		94-99	60809398	**CA006**	FRONT
1.6 16V (835EI)		96-99	60809398	**CA006**	FRONT
1.8 16V LE (835FG)		96-99	60809398	**CA006**	FRONT
1.8 GT 16V (835EH)		96-99	60809398	**CA006**	FRONT
1.8 i.e. (835FA)		94-99	60809398	**CA006**	FRONT
1.9 TDS (835EE, 835EF)		94-99	60809398	**CA006**	FRONT
2.0 16V (835ED)		94-99	60809398	**CA006**	FRONT
2.0 Integrale (835ED)		94-99	60809398	**CA006**	FRONT
DELTA I					
2.0 16V HF Evo Integrale (831AB.027)		93-94	60809398	**CA006**	FRONT

follow LANCIA

MODELLO MODEL	DIMENSIONI DIMENSIONS	ANNO YEAR	RIF ORIGINALE ORIGINAL REF	RIF CORAM CORAM REF	NOTE NOTES
DELTA II					
1.4 i.e (836AF, 836AH)		94-99	60809398	**CA006**	FRONT
1.6 i.e (836AD, 836AP)		93-99	60809398	**CA006**	FRONT
1.6 i.e 16V (836AO)		96-99	60809398	**CA006**	FRONT
1.8 i.e (836AE, 836AG, 836AL)		93-99	60809398	**CA006**	FRONT
1.8 i.e 16V (836AQ)		96-99	60809398	**CA006**	FRONT
1.8 i.e 16V GT (836AR)		96-99	60809398	**CA006**	FRONT
1.9 TD (836AM, 836AN)		94-99	60809398	**CA006**	FRONT
2.0 16V (836AA, 836CA)		93-99	60809398	**CA006**	FRONT
2.0 16V Turbo (836AB)		93-99	60809398	**CA006**	FRONT
LYBRA					
1.6 16V (839AXA1A)		99-05	5035.29	**CA014**	FRONT
1.8 16V (839AXB1A, 839AXG1A)		99-05	5035.29	**CA014**	FRONT
1.9 JTD		99-05	5035.29	**CA014**	FRONT
2.0 20V (839AXC11, 839AXC1A, 839AXH1A)		99-05	5035.29	**CA014**	FRONT
2.4 JTD		99-05	5035.29	**CA014**	FRONT
LYBRA SW					
1.6 16V(839BXA1A)		99-05	5035.29	**CA014**	FRONT
1.8 16V(839BXB1A, 839BXG1A)		99-05	5035.29	**CA014**	FRONT
1.9 JTD		99-05	5035.29	**CA014**	FRONT
2.0 20V(839BXC11,839BXC1A,839BXH1A)		99-05	5035.29	**CA014**	FRONT
2.4 JTD		99-05	5035.29	**CA014**	FRONT
MUSA					
1.3 D Multijet - 1.4 - 1.9 D Multijet		04-dic	5035.57	**CA032**	
1.4 LPG		10-dic	5035.57	**CA032**	
1.6 D Multijet		08-dic	5035.57	**CA032**	
NUOVA DELTA					
Tutti i tipi/All types/Tous types		93->	60806398	**CA006**	FRONT
PHEDRA					
2.0 (179AXA11)		02-ott	5035.29	**CA014**	FRONT
2.0 JTD (179AXAB1A)		03-ott	5035.29	**CA014**	FRONT
2.2 JTD (179AXC1A)		02-ott	5035.29	**CA014**	FRONT
3.0 V6		02-ott	5035.29	**CA014**	FRONT

follow LANCIA

MODELLO MODEL	DIMENSIONI DIMENSIONS	ANNO YEAR	RIF ORIGINALE ORIGINAL REF	RIF CORAM CORAM REF	NOTE NOTES
Y (840A)					
1.1 (840AE)		95->	4400895	**CA015**	FRONT
Y10 (156)					
1.0 Fire		85-90	4400895	**CA015**	FRONT
1.0 Fire (156AE) Cat.		87-92	4400895	**CA015**	FRONT
1.0 Fire (156B, 156AD)		85-91	4400895	**CA015**	FRONT
1.0 Fire 4WD		86-90	4400895	**CA015**	FRONT
1.0 Fire 4WD (156AE)		87-92	4400895	**CA015**	FRONT
1.0 Turbo (156D)		85-89	4400895	**CA015**	FRONT
1.1 Avenue (156AG)		95	4400895	**CA015**	FRONT
1.1 Avenue 4 ruote motrici (156AG)		95	4400895	**CA015**	FRONT
1.1 i.e. Fire (156AG)		89-95	4400895	**CA015**	FRONT
1.1 i.e. Fire 4WD (156AG)		92-95	4400895	**CA015**	FRONT
1.3 i.e. Fire (156AB)		87-93	4400895	**CA015**	FRONT
1.3 i.e. Fire (156AF)		89-95	4400895	**CA015**	FRONT
YPSILON					
1.2 - 1.3 JTD - 1.4 16V		03-nov	5035.57	**CA032**	
1.3 D Multijet - 1.4		06-nov	5035.57	**CA032**	
1.4 LPG		10-nov	5035.57	**CA032**	
ZETA					
2.0 16V (220AL5)		98-02	5035.29	**CA014**	FRONT
2.0 JTD (220AN5)		99-02	5035.29	**CA014**	FRONT
2.0 JTD 16V		99-02	5035 55	**CA014**	FRONT
2.0 Turbo (220AD5, 220CD5)		95-02	5035.29	**CA014**	FRONT
2.1 TD (220AJ5)		96-99	5035.29	**CA014**	FRONT

MAZDA

MODELLO MODEL	DIMENSIONI DIMENSIONS	ANNO YEAR	RIF ORIGINALE ORIGINAL REF	RIF CORAM CORAM REF	NOTE NOTES
3					
1.4 - 1.6 - 2.0		03-set	BBM2-34-38X	**CA027**	
1.6 DI Turbo		04-set	BBM2-34-38X	**CA027**	
1.6 MZ-CD - 2.0 MZR-CD - 2.3 MPS Turbo		06-set	BBM2-34-38X	**CA027**	
1.6 MZR-CD - 2.0 MZR-CD		ago-13	BBM2-34-38X	**CA027**	
2.0 MZR		set-14	BBM2-34-38X	**CA027**	
2.2 MZR-CD		set-13	BBM2-34-38X	**CA027**	

follow MAZDA

MODELLO MODEL	DIMENSIONI DIMENSIONS	ANNO YEAR	RIF ORIGINALE ORIGINAL REF	RIF CORAM CORAM REF	NOTE NOTES
3 Tre volumi					
1.6 - 1.6 DI Turbo		04-set	BBM2-34-38X	**CA027**	
1.6 MZR - 2.0 MZR		set-14	BBM2-34-38X	**CA027**	
1.6 MZR-CD		ago-13	BBM2-34-38X	**CA027**	
2.0		03-set	BBM2-34-38X	**CA027**	
2.0 MZR DISI - 2.2 MZR-CD		set-14	BBM2-34-38X	**CA027**	
2.0 MZR-CD		06-set	BBM2-34-38X	**CA027**	
5					
1.8 - 2.0 - 2.0 CD		05-ott	BBM2-34-38X	**CA027**	

MERCEDES-BENZ

MODELLO MODEL	DIMENSIONI DIMENSIONS	ANNO YEAR	RIF ORIGINALE ORIGINAL REF	RIF CORAM CORAM REF	NOTE NOTES
CITAN Combi					
108 CDI - 109 CDI		12->	4153220184	**CA030**	
111 CDI - 112		13->	4153220184	**CA030**	
CITAN Furgonato					
108 CDI - 109 CDI		12->	4153220184	**CA030**	
111 CDI - 112		13->	4153220184	**CA030**	
CITAN Mixto					
109 CDI		12->	4153220184	**CA030**	
111 CDI		13->	4153220184	**CA030**	
CLA Coupé					
AMG CLA 45 4-matic		15->	2049810025	**CA026**	
CLA 180 - CLA 180 CDI/d - CLA 200 - CLA 200 CDI		13->	2049810025	**CA026**	
CLA 200 CDI/d - CLA 200 CDI/d 4-matic		14->	2049810025	**CA026**	
CLA 220 4-matic		16->	2049810025	**CA026**	
CLA 220 CDI/d		13->	2049810025	**CA026**	
CLA 220 CDI/d 4-matic - CLA 220 CDI 4-matic		14->	2049810025	**CA026**	
CLA 250 - CLA 250 4-matic - CLA 45 AMG-matic		13->	2049810025	**CA026**	

follow MERCEDES-BENZ

MODELLO MODEL	DIMENSIONI DIMENSIONS	ANNO YEAR	RIF ORIGINALE ORIGINAL REF	RIF CORAM CORAM REF	NOTE NOTES
CLA Shooting Brake					
AMG CLA 45 4-matic		15->	2049810025	**CA026**	
CLA 180 - CLA 180 d - CLA 200		15->	2049810025	**CA026**	
CLA 200 CDI/d - CLA 200 CDI/d 4-matic		15->	2049810025	**CA026**	
CLA 220 4-matic		16->	2049810025	**CA026**	
CLA 220 CDI/d - CLA 220 CDI/d 4-matic		15->	2049810025	**CA026**	
CLA 250 - CLA 250 4-matic		15->	2049810025	**CA026**	
CLA 45 AMG 4-matic		15-15	2049810025	**CA026**	
CLASSE A					
A 160		15->	2049810025	**CA026**	
A 160 CDI/d		13->	2049810025	**CA026**	
A 180 - A 180 CDI - A 180 CDI/d - A 200 - A 200 CDI		12->	2049810025	**CA026**	
A 200 CDI/d - A 200 CDI/d 4-matic		14->	2049810025	**CA026**	
A 220 CDI - A 220 CDI 4-matic		12->	2049810025	**CA026**	
A 220 d - A 220 d 4-matic		15->	2049810025	**CA026**	
A 250 - A 250 4-matic		12->	2049810025	**CA026**	
A 45 AMG 4-matic		13->	2049810025	**CA026**	
CLASSE B					
B 160		15->	2049810025	**CA026**	
B 160 CDI/d		13->	2049810025	**CA026**	
B 180 - B 180 CDI		11->	2049810025	**CA026**	
B 180 CDI/d		13->	2049810025	**CA026**	
B 200 - B 200 CDI		11->	2049810025	**CA026**	
B 200 CDI/d - B 200 CDI/d 4-matic		14->	2049810025	**CA026**	
B 200 Natural Gas Drive / B 200 c		12->	2049810025	**CA026**	
B 220 4-matic		13->	2049810025	**CA026**	
B 220 CDI/d		11->	2049810025	**CA026**	
B 220 CDI/d 4-matic		14->	2049810025	**CA026**	
B 250		12->	2049810025	**CA026**	
B 250 4-matic		14->	2049810025	**CA026**	
Electric Drive / B 250 e		14-17	2049810025	**CA026**	

follow MERCEDES-BENZ

MODELLO MODEL	DIMENSIONI DIMENSIONS	ANNO YEAR	RIF ORIGINALE ORIGINAL REF	RIF CORAM CORAM REF	NOTE NOTES
CLASSE C					
C 180 CDI		nov-14	2049810025	**CA026**	
C 180 CGI		ago-14	2049810025	**CA026**	
C 180 CGI		lug-14	2049810025	**CA026**	
C 180 Kompressor		ago-14	2049810025	**CA026**	
C 200 CDI - C 200 CGI - C 200 Kompressor		lug-14	2049810025	**CA026**	
C 220 CDI		lug-14	2049810025	**CA026**	
C 220 CDI		ago-14	4153220184	**CA030**	
C 220 CDI 4-matic		13-14	2049810025	**CA026**	
C 230 - C230 4-matic		lug-14	2049810025	**CA026**	
C 250 CDI - C250 CDI 4-matic		nov-14	2049810025	**CA026**	
C 250 CGI		set-14	2049810025	**CA026**	
C 280 - C 280 4-matic		lug-14	2049810025	**CA026**	
C 300		set-14	2049810025	**CA026**	
C 300 4-matic		lug-14	2049810025	**CA026**	
C 320 CDI - C 320 CDI 4-matic		lug-14	2049810025	**CA026**	
C 350 - C350 4-matic		lug-14	2049810025	**CA026**	
C 350 CDI - C 350 CDI 4-matic		set-14	2049810025	**CA026**	
C 350 CGI - C 63 AMG		ago-14	2049810025	**CA026**	
CLASSE C Coupé					
C 180 - C 200 CGI - C 220 CDI		11->	2049810025	**CA026**	
C 250 - C 250 CDI - C 350 - C 63 AMG		11->	2049810025	**CA026**	
CLASSE C T-Model					
C 180 CDI		nov-14	2049810025	**CA026**	
C 180 CGI		set-14	2049810025	**CA026**	
C 180 Kompressor		lug-14	2049810025	**CA026**	
C 200 CDI - C200 CGI - C 200 - C 220 CDI		lug-14	2049810025	**CA026**	
C 220 CDI		ago-14	4153220184	**CA030**	
C 220 CDI 4-matic		13-14	2049810025	**CA026**	
C 230		lug-14	2049810025	**CA026**	
C 250 CDI - C 250 CGI		set-14	2049810025	**CA026**	
C 250 CDI 4-matic		ott-14	2049810025	**CA026**	
C 280 - C 320 CDI		lug-14	2049810025	**CA026**	
C 320 CDI 4-matic		07-nov	2049810025	**CA026**	
C 350		lug-14	2049810025	**CA026**	
C 350 CDI - C 350 CDI 4-matic		set-14	2049810025	**CA026**	
C 350 CGI		nov-14	2049810025	**CA026**	

follow MERCEDES-BENZ

MODELLO MODEL	DIMENSIONI DIMENSIONS	ANNO YEAR	RIF ORIGINALE ORIGINAL REF	RIF CORAM CORAM REF	NOTE NOTES
CLASSE E					
E 200 CDI / BlueTEC - E 200 CGI		09->	2049810025	**CA026**	
E 200 NGT		11->	2049810025	**CA026**	
E 220 CDI / BlueTEC - E 250 CDI / BlueTEC		09->	2049810025	**CA026**	
E 250 CDI / BlueTEC - E 250 CGI		09->	2049810025	**CA026**	
E 300 - E 300 4-matic - E 300 CDI / BlueTEC - E 350		11->	2049810025	**CA026**	
E 350 4-matic - E 350 BlueTEC - E 350 CDI		09->	2049810025	**CA026**	
E 350 CDI 4-matic		09->	2049810025	**CA026**	
E 350 CGI		09-nov	2049810025	**CA026**	
E 500 - E 500 4-matic		09->	2049810025	**CA026**	
E 63 AMG		09->	2049810025	**CA026**	
CLASSE E Cabriolet					
E 200 CGI - E 220 CDI/BlueTEC/d - E 250 CGI - E 500		10->	2049810025	**CA026**	
E 300 - E 350		11->	2049810025	**CA026**	
E 350 CDI - E 350 CGI		10->	2049810025	**CA026**	
CLASSE E Coupé					
E 200 CGI - E 220 CDI/d		10->	2049810025	**CA026**	
E 300 - E 350 -		11->	2049810025	**CA026**	
E 350 4-matic		13->	2049810025	**CA026**	
E250 CDI/BlueTEC/d - E 250 CGI - E 350 CDI - E 350 CGI - E 500		09->	2049810025	**CA026**	
CLASSE E T-Model					
E 200 CDI - E 200 CGI - E 220 CDI/BlueTEC - E 250 CGI		09->	2049810025	**CA026**	
E 300 - E 300 4-matic - E 500 4-matic		11->	2049810025	**CA026**	
E 350 4-matic - E 350 CDI - E 350 BlueTEC - E 350 CDI 4-matic		09->	2049810025	**CA026**	
E 350 CGI - E 500 - E 63 AMG		09->	2049810025	**CA026**	
CLASSE GLA					
AMG GLA 45 4-matic - GLA 180 - GLA 220 d - GLA 220 D 4-matic		15->	2049810025	**CA026**	
GLA 180 CDI /d - GLA 45 AMG 4-matic		14->	2049810025	**CA026**	
GLA 200 - GLA 200 CDI/d - GLA 200 4-matic - GLA 220 CDI		13->	2049810025	**CA026**	
GLA 220 4-matic		17->	2049810025	**CA026**	
GLA 220 CDI 4-matic - GLA 250 - GLA 250 4-matic		13->	2049810025	**CA026**	
CLS					
CLS 250 CDI/BlueTEC/d - CLS 350 - CLS 350 CDI/d - CLS 500		11->	2049810025	**CA026**	
CLS 350 BlueTEC / d		12->	2049810025	**CA026**	
CLS 63 AMG		11->	2049810025	**CA026**	

follow MERCEDES-BENZ

MODELLO MODEL	DIMENSIONI DIMENSIONS	ANNO YEAR	RIF ORIGINALE ORIGINAL REF	RIF CORAM CORAM REF	NOTE NOTES
CLS Shooting Brake					
CLS 220 BlueTEC/ d - CLS 350 BlueTEC/ d - CLS 400 -		14->	2049810025	**CA026**	
CLS 250 CDI/BlueTEC /d - CLS 350 - CLS 350 CDI/ d - CLS 500		12->	2049810025	**CA026**	
CLS 63 AMG		12->	2049810025	**CA026**	
CLS 63 AMG 4-matic		13->	2049810025	**CA026**	
SLC					
180 - 200 - 300 - AMG SLC 43 -		16->	2049810025	**CA026**	
200 - 250 - 350		11->	2049810025	**CA026**	
250 CDI/ d - 55 AMG		12->	2049810025	**CA026**	
250 d		16-17	2049810025	**CA026**	
VIANO					
2.0 4-matic - 2.2 4-matic		05->	6399810525	**CA041**	
3.0 - 3.2 - CDI 2.0 - CDI 2.2		03->	6399810525	**CA041**	
3.5		07->	6399810525	**CA041**	
3.7		04->	6399810525	**CA041**	
CDI 3.0		06->	6399810525	**CA041**	
VITO / MIXTO Furgonato					
109 CDI - 111 CDI - 115 CDI - 119 CDI - 122 CDI		03->	6399810525	**CA041**	
110 CDI - 113 CDI - 116 CDI - 120 CDI		10->	6399810525	**CA041**	
123		04-ott	6399810525	**CA041**	
126		07->	6399810525	**CA041**	
E-CELL		12->	6399810525	**CA041**	
VITO Autobus					
109 CDI - 111CDI - 115 CDI - 119 - 122 -		03->	6399810525	**CA041**	
109 CDI 4x4 - 111 CDI 4x4 - 115 CDI 4x4 - 126		07->	6399810525	**CA041**	
110 CDI - 113 CDI - 113 4x4 - 116 CDI - 116 CDI 4x4 - 122 CDI		10->	6399810525	**CA041**	
120 CDI		06->	6399810525	**CA041**	
123		04->	6399810525	**CA041**	
E-CELL		12->	6399810525	**CA041**	

MERCES-BENZ

MODELLO MODEL	DIMENSIONI DIMENSIONS	ANNO YEAR	RIF ORIGINALE ORIGINAL REF	RIF CORAM CORAM REF	NOTE NOTES
CLASSE GLK					
200		14-15	2049810025	**CA026**	
200 CDI - 220 CDI 4-matic - 320 CDI 4-matic - 350 4-matic		ago-15	2049810025	**CA026**	
250 4-matic		13-15	2049810025	**CA026**	
250 CDI 4-matic - 300 4-matic - 350 - 350 CDI 4-matic		set-15	2049810025	**CA026**	
280 4-matic		08-set	2049810025	**CA026**	

MITSUBISHI

MODELLO MODEL	DIMENSIONI DIMENSIONS	ANNO YEAR	RIF ORIGINALE ORIGINAL REF	RIF CORAM CORAM REF	NOTE NOTES
L 300					
2.5 D (P15T)		94->		**CA014**	FRONT

NISSAN

MODELLO MODEL	DIMENSIONI DIMENSIONS	ANNO YEAR	RIF ORIGINALE ORIGINAL REF	RIF CORAM CORAM REF	NOTE NOTES
CUBE					
1.5 dCi - 1.6 16V		10->	54325-AX000	**CA030**	
DATSUN 180 B					
1.8		77-81	344505	**CA034**	
JUKE					
1.2 DIG-T - 1.6 DIG-T NISMO RS - 1.6 DIG-T NISMO RS 4x4		14->	54325-AX000	**CA030**	
1.5 dCi - 1.6 - 1.6 DIG-T - 1.6 DIG-T 4x4		10->	54325-AX000	**CA030**	
1.6 DIG-T NISMO - 1.6 DIG-T NISMO 4x4		13-14	54325-AX000	**CA030**	
LEAF					
Electric		10->	54325-AX000	**CA030**	
MICRA C+C III					
1.4 16V - 1.6 160 SR		05->	54325-AX000	**CA030**	
MICRA III					
1.0 16V - 1.2 16V - 1.4 16V - 15 dCi		03-ott	54325-AX000	**CA030**	
160 SR		05-ott	54325-AX000	**CA030**	

follow NISSAN

MODELLO MODEL	DIMENSIONI DIMENSIONS	ANNO YEAR	RIF ORIGINALE ORIGINAL REF	RIF CORAM CORAM REF	NOTE NOTES
N2V200 Cassone					
1.5 dCi - 1.6 16V		10->	54325-AX000	**CA030**	
NOTE					
1.4 1.5 dCi - 1.6		06-ott 06-dic	54325-AX000 54325-AX000	**CA030** **CA030**	
NV200 / EVALIA					
Autobus 1.5 dCi Autobus 1.6 16V		11->
10->	54325-AX000 54325-AX000	**CA030** **CA030**	
PULSAR 2 volumi					
1.2 DIG-T - 1.5 dCi 1.6 DIG-T		14->
15->	54325-AX000 54325-AX000	**CA030** **CA030**	
QASHQAI / QASHQAI +2 I					
1.5 dCi - 1.6 - 2.0 - 2.0 dCi - 2.0 dCi Trazione integrale 1.6 dCi - 1.6 dCi Trazione integrale		lug-13 nov-13	54325-AX000 54325-AX000	**CA030** **CA030**	
TIIDA 2 volumi					
1.5 dCi - 1.6 - 1.8		07-nov	54325-AX000	**CA030**	
TIIDA 3 volumi					
1.5 dCi - 1.6 - 1.8		07-dic	54325-AX000	**CA030**	
X-TRAIL					
2.0 - 2.0 dCi - 2.0 dCi 4x4 - 2.0 dCi FWD - 2.5 4x4 2.0 FWD		lug-13 ago-13	54325-AX000 54325-AX000	**CA030** **CA030**	

OPEL

MODELLO MODEL	DIMENSIONI DIMENSIONS	ANNO YEAR	RIF ORIGINALE ORIGINAL REF	RIF CORAM CORAM REF	NOTE NOTES
AMPERA					
EV 150		11-151	4806308	**CA031**	

follow OPEL

MODELLO MODEL	DIMENSIONI DIMENSIONS	ANNO YEAR	RIF ORIGINALE ORIGINAL REF	RIF CORAM CORAM REF	NOTE NOTES
ASCONA C					
1.3 N - 1.6 S -		81-86	344505	**CA034**	
1.3 S - 1.6		81-88	344505	**CA034**	
1.6 D		82-88	344505	**CA034**	
1.6 i - 1.8 - 2.0 i GT		87-88	344505	**CA034**	
1.6 i Cat - 2.0 i - 2.0 i Cat		86-88	344505	**CA034**	
1.8 E		85-86	344505	**CA034**	
1.8 i		82-86	344505	**CA034**	
ASCONA C 2 volumi					
1.3 N - 1.6 S -		81-86	344505	**CA034**	
1.3 S - 1.6		81-88	344505	**CA034**	
1.6 D		82-88	344505	**CA034**	
1.6 i - 1.8 - 2.0 i GT		87-88	344505	**CA034**	
1.6 i Cat - 2.0 i - 2.0 i Cat		86-88	344505	**CA034**	
1.8 E		85-86	344505	**CA034**	
1.8 i		82-86	344505	**CA034**	
ASTRA G 2 Volumi					
1.2 16V - 1.4 16V - 1.6 16V - 1.8 16V - 2.0 16V - 2.0 DI		98-05	312510	**CA038**	
1.6		98-09	312510	**CA038**	
1.7 CDTI		03-set	312510	**CA038**	
1.7 DTI - 1.7 TD - 2.2 16V		00-05	312510	**CA038**	
2.0 DTI		99-05	312510	**CA038**	
2.0 OPC - 2.2 DTI		02-mag	312510	**CA038**	
ASTRA G Cabriolet					
1.6		03-mag	312510	**CA038**	
1.6 16V - 1.8 16V - 2.2 16V		01-mag	312510	**CA038**	
2.0 16V Turbo - 2.0 OPC - 2.2 DTI		02-mag	312510	**CA038**	
ASTRA G Coupe					
1.8 16V - 2.0 16V Turbo - 2.2 16V		00-05	312510	**CA038**	
2.2 DTI		02-mag	312510	**CA038**	
ASTRA G Furgonato					
1.6		00-05	312510	**CA038**	
1.7 TD - 2.0 DI		99-05	312510	**CA038**	

follow OPEL

MODELLO MODEL	DIMENSIONI DIMENSIONS	ANNO YEAR	RIF ORIGINALE ORIGINAL REF	RIF CORAM CORAM REF	NOTE NOTES
ASTRA G Station wagon					
1.2 16V - 1.4 16V - 1.6 16V - 1.8 16V - 2.0 16V - 2.0 DI		98-04	312510	**CA038**	
1.6		98-09	312510	**CA038**	
1.6 CNG		03-apr	312510	**CA038**	
1.7 CDTi		03-set	312510	**CA038**	
1.7 DTI 16V		00-04	312510	**CA038**	
1.7 TD		98-00	312510	**CA038**	
2.0 DTI 16V		99-04	312510	**CA038**	
2.0 OPC - 2.2 DTI		02-apr	312510	**CA038**	
2.2 16V		01-apr	312510	**CA038**	
ASTRA G Tre volumi					
1.2 16V - 1.4 16V - 1.6 16V - 1.8 16V - 2.0 16V - 2.0 DI		98-05	312510	**CA038**	
1.6		98-09	312510	**CA038**	
1.7 CDTI		03-set	312510	**CA038**	
1.7 DTI 16V		00-05	312510	**CA038**	
1.7 TD		98-00	312510	**CA038**	
2.0 DTI 16V		99-05	312510	**CA038**	
2.2 16V		01-mag	312510	**CA038**	
2.2 DTI		02-mag	312510	**CA038**	
ASTRA J					
1.3 CDTI - 1.4 - 1.4 Turbo - 1.6 - 1.6 Turbo - 1.6 Turbo 4x4 - 1.7 CDTI		set-15	4806308	**CA031**	
1.4 LPG - 1.6 SIDI - 2.0 BiTurbo CDTI		dic-15	4806308	**CA031**	
1.6 CDTi		13-15	4806308	**CA031**	
2.0 CDTI		set-15	4806308	**CA031**	
ASTRA J GTC					
1.4 - 1.7 CDTI - 1.8 - 2.' CDTI		nov-15	4806308	**CA031**	
1.6		11->	4806308	**CA031**	
1.6 CDTI		14->	4806308	**CA031**	
1.6 SIDI - 2.0		12->	4806308	**CA031**	
2.0 BiTurbo CDTI		dic-15	4806308	**CA031**	
ASTRA J Sports Tourer					
1.3 CDTI		ott-14	4806308	**CA031**	
1.4 - 1.4 Turbo - 1.6 - 1.6 Turbo - 1.7 CDTI - 2.0 CDTI		ott-15	4806308	**CA031**	
1.4 LPG		nov-15	4806308	**CA031**	
1.6 CDTi		13-15	4806308	**CA031**	
1.6 SIDI - 2.0 BiTurbo CDTI		dic-15	4806308	**CA031**	

follow OPEL

MODELLO MODEL	DIMENSIONI DIMENSIONS	ANNO YEAR	RIF ORIGINALE ORIGINAL REF	RIF CORAM CORAM REF	NOTE NOTES
ASTRA J Tre volumi					
1.3 CDTI - 1.4 - 1.4 Turbo - 1.7 CDTI		dic-15	4806308	**CA031**	
1.4 LPG - 1.6 CDTi		14->	4806308	**CA031**	
1.6 - 1.6 Turbo		12->	4806308	**CA031**	
1.6 SIDI		dic-16	4806308	**CA031**	
CASCADA					
1.4 - 1.4 Turbo - 1.6 - 1.6 SIDI - 2.0 CDTI		13->	4806308	**CA031**	
COMBO Cassone					
1.6 - 1.7 DI - 1.7 DTI 16V		01->	312510	**CA038**	
COMBO Tour					
1.3 CDTI 16V		04-nov	312510	**CA038**	
CORSA C					
1.0 - 1.2 - 1.4 - 1.7 DI - 1.7 DTI - 1.8		00-09	312510	**CA038**	
1.2 Twinport		04-set	312510	**CA038**	
1.3 CDTI - 1.7 CDTI		03-set	312510	**CA038**	
CORSA C Furgonato					
1.2 16V - 1.7 DI 16V - 1.7 DTI 16V		00-03	312510	**CA038**	
INSIGNIA A					
1.4		nov-17	344469	**CA033**	
1.4 LPG		dic-17	344469	**CA033**	
1.6 - 1.6 Turbo - 1.8 - 2.0 Biturbo CDTI - 2.0 CDTI - 2.0 Turbo		ago-17	344469	**CA033**	
1.6 CDTi		15-17	344469	**CA033**	
1.6 SIDI		13-17	344469	**CA033**	
2.0 Biturbo CDTI 4x4		set-17	344469	**CA033**	
2.0 CDTI 4x4 - 2.0 E85 Turbo		ott-17	344469	**CA033**	
2.0 Turbo 4x4 - 2.8 V6 Turbo OPC 4x4		ago-17	344469	**CA033**	

follow OPEL

MODELLO MODEL	DIMENSIONI DIMENSIONS	ANNO YEAR	RIF ORIGINALE ORIGINAL REF	RIF CORAM CORAM REF	NOTE NOTES
INSIGNIA A Sport Tourer					
1.4		nov-13	344469	**CA033**	
1.4 LPG		dic-13	344469	**CA033**	
1.6		08-dic	344469	**CA033**	
1.6 CDTi		15-17	344469	**CA033**	
1.6 SIDI		13-14	344469	**CA033**	
1.6 Turbo		set-13	344469	**CA033**	
1.8 - 2.0 Turbo 4x4 - 2.8 V6 Turbo 4x4		ago-13	344469	**CA033**	
2.0 Biturbo CDTI - 2.0 Biturbo 4x4		ago-17	344469	**CA033**	
2.0 CDTI		ago-15	344469	**CA033**	
2.0 CDTI 4x4		ott-16	344469	**CA033**	
2.0 E85 Turbo		10-nov	344469	**CA033**	
2.0 Turbo		ago-14	344469	**CA033**	
2.8 V6 Turbo OPC 4x4		set-15	344469	**CA033**	
INSIGNIA A Tre volumi					
1.4		nov-17	344469	**CA033**	
1.4 LPG		dic-17	344469	**CA033**	
1.6 - 1.6 Turbo - 1.8 - 2.0 Biturbo CDTI - 2.0 Biturbo CDTI 4x4 - 2.0 CDTI		ago-17	344469	**CA033**	
1.6 CDTi		15-17	344469	**CA033**	
1.6 SIDI		13-17	344469	**CA033**	
2.0 Biturbo CDTI 4x4 - 2.8 V6 Turbo OPC 4x4		set-17	344469	**CA033**	
2.0 CDTI 4x4		ott-17	344469	**CA033**	
2.0 Turbo - 2.0 Turbo 4x4 - 2.0 E85 Turbo - 2.8 V6 Turbo 4x4		ago-17	344469	**CA033**	
MERIVA A MPV / Space wagon					
1.3 CDTI - 1.6 - 1.7 CDTI - 1.7 DTI - 1.8		03-ott	312510	**CA038**	
1.4 16V		04-ott	312510	**CA038**	
1.6 16V		03-giu	312510	**CA038**	
MOKKA / MOKKA X					
1.4 - 1.4 LPG		13->	4806308	**CA031**	
1.4 4x4 - 1.6 - 1.7 CDTI - 1.7 CDTI 4x4		12->	4806308	**CA031**	
1.6 CDTI - 1.6 CDTI 4x4		15->	4806308	**CA031**	
MOVANO Pianale piatto/Autotelaio					
2.8 DTI		98-01	9151063380	**CA009**	FRONT

follow OPEL

MODELLO MODEL	DIMENSIONI DIMENSIONS	ANNO YEAR	RIF ORIGINALE ORIGINAL REF	RIF CORAM CORAM REF	NOTE NOTES
OMEGA A					
1.8 - 1.8 S - 2.0 - 2.0 i - 2.3 D		86-94	344505	**CA034**	
1.8 N		86-87	344505	**CA034**	
2.3 Interc. - 2.4 i . 3.0 Cat		88-94	344505	**CA034**	
2.3 TD -		86-88	344505	**CA034**	
2.6 i		90-94	344505	**CA034**	
3.0		87-90	344505	**CA034**	
3.0 24V		89-94	344505	**CA034**	
3.0 24V Evolution500		91-92	344505	**CA034**	
3.0 24V Lotus		90-92	344505	**CA034**	
OMEGA A Station wagon					
1.8 - 1.8 S - 2.0 - 2.0 i - 2.3 D		86-94	344505	**CA034**	
1.8 N		86-87	344505	**CA034**	
2.3 Interc. - 2.4 i		88-94	344505	**CA034**	
2.3 TD		86-88	344505	**CA034**	
2.6 i		90-94	344505	**CA034**	
3.0 - 3.0 Cat		87-94	344505	**CA034**	
3.0 24V		89-94	344505	**CA034**	
OMEGA B					
2.0 - 2.5 V6		94-00	344505	**CA034**	
2.0 16V		94-99	344505	**CA034**	
2.0 DTI 16V		97-00	344505	**CA034**	
2.2 16V		99-03	344505	**CA034**	
2.2 DTI 16V - 2.6 V6		00-03	344505	**CA034**	
2.5 DTI		01-mar	344505	**CA034**	
2.5 TD - 3.0 V6		94-03	344505	**CA034**	
OMEGA B Station wagon					
2.0 - 2.0 16V		94-99	344505	**CA034**	
2.0 DTI 16V		97-00	344505	**CA034**	
2.2 16V		99-03	344505	**CA034**	
2.2 DTI - 2.6 V6		00-03	344505	**CA034**	
2.5 DTI - 3.2 V6		01-mar	344505	**CA034**	
2.5 TD - 3.0 V6		94-01	344505	**CA034**	
2.5 V6		94-00	344505	**CA034**	

follow OPEL

MODELLO MODEL	DIMENSIONI DIMENSIONS	ANNO YEAR	RIF ORIGINALE ORIGINAL REF	RIF CORAM CORAM REF	NOTE NOTES
SENATOR A					
2.0 E		83-84	344505	**CA034**	
2.2 E - 2.2 TD		84-87	344505	**CA034**	
2.5		78-80	344505	**CA034**	
2.5 E		83-87	344505	**CA034**	
2.8		78-81	344505	**CA034**	
3.0		78-87	344505	**CA034**	
3.0 E		78-86	344505	**CA034**	
SENATOR B					
2.5 i - 2.6 i		90-93	344505	**CA034**	
3.0		87-93	344505	**CA034**	
3.0 24V		89-93	344505	**CA034**	
3.0 i Cat		88-93	344505	**CA034**	
SIGNUM 2 volumi					
1.8 - 2.0 Turbo - 2.2 direct - 2.2 DTI - 3.0 V6		03-ago	344538	**CA037**	
1.9 CDTI		04-ago	344538	**CA037**	
2.0 DTI		03-apr	344538	**CA037**	
2.8 V6		05-ago	344538	**CA037**	
VECTRA B					
1.6 i - 1.6 i 16V		95-02	312510	**CA038**	
1.7 TD		95-98	312510	**CA038**	
1.8 i 16V - 2.0 i 16V - 2.5 i V6		95-00	312510	**CA038**	
2.0 DI 16V		96-00	312510	**CA038**	
2.0 DTI 16V		97-02	312510	**CA038**	
2.2 DTI 16V - 2.2 i 16V - 2.6 i V6		00-02	312510	**CA038**	
i 500 2.5		98-00	312510	**CA038**	
VECTRA B 2 volumi					
1.6 i		95-03	312510	**CA038**	
1.6 i 16V		95-02	312510	**CA038**	
1.7 TD		95-98	312510	**CA038**	
1.8 i 16V - 2.0 i 16V - 2.5 i V6		95-00	312510	**CA038**	
2.0 DI		96-00	312510	**CA038**	
2.0 DTI		97-03	312510	**CA038**	
2.2 DTI - 2.2 i 16V - 2.6 i V6		00-03	312510	**CA038**	

follow OPEL

MODELLO MODEL	DIMENSIONI DIMENSIONS	ANNO YEAR	RIF ORIGINALE ORIGINAL REF	RIF CORAM CORAM REF	NOTE NOTES
VECTRA B Station wagon					
1.6 i - 1.8 i 16V - 2.0 DI 16V - 2.0 i 16V - 2.5 i V6		96-00	312510	**CA038**	
1.6 i 16V		96-02	312510	**CA038**	
2.0 DTI 16V		97-03	312510	**CA038**	
2.2 DTI 16V - 2.2 i 16V - 2.6 i V6		00-03	312510	**CA038**	
i 500 2.5		98-00	312510	**CA038**	
VECTRA C					
1.6 - 2.8 V6 Turbo - 3.0 CDTi		05-ago	344538	**CA037**	
1.6 16V		04-ago	344538	**CA037**	
1.8 - 1.8 16V - 2.2 16V -		02-ago	344538	**CA037**	
1.9 CDTI		04-ago	344538	**CA037**	
2.0 16V Turbo - 2.2 DGI		03-ago	344538	**CA037**	
2.0 DTI 16V - 3.2 V6		02-giu	344538	**CA037**	
2.2 DTI 16V		02-apr	344538	**CA037**	
3.0 CDTI		03-mag	344538	**CA037**	
VECTRA C GTS					
1.6		06-ago	344538	**CA037**	
1.8 - 2.8 V6 Turbo - 3.0 CDTi		05-ago	344538	**CA037**	
1.8 16V - 2.2 16V - 2.2 DTI 16V		02-ago	344538	**CA037**	
1.9 CDTI		04-set	344538	**CA037**	
2.0 16V Turbo - 2.2 DGi - 3.0 CDTI		03-ago	344538	**CA037**	
2.0 DTI 16V		02-mag	344538	**CA037**	
3.2 V6		02-giu	344538	**CA037**	
VECTRA C Station wagon					
1.6 - 2.8 V6 Turbo		05-ago	344538	**CA037**	
1.6 16V		04-mag	344538	**CA037**	
1.8 - 2.0 Turbo - 2.2 direct - 3.0 V6 CDTI		03-ago	344538	**CA037**	
1.9 CDTI		04-ago	344538	**CA037**	
2.0 DTI - 2.2 DTI - 3.2 V6		03-mag	344538	**CA037**	
ZAFIRA A MVP/Space wagon					
1.6 CNG - 2.0 OPC		01-mag	312510	**CA038**	
1.8 16V - 2.0 DTI 16V		99-05	312510	**CA038**	
2.2 16V		00-05	312510	**CA038**	
2.2 DTI 16V		02-mag	312510	**CA038**	

follow OPEL

MODELLO MODEL	DIMENSIONI DIMENSIONS	ANNO YEAR	RIF ORIGINALE ORIGINAL REF	RIF CORAM CORAM REF	NOTE NOTES
ZAFIRA TOURER C					
1.4 - 1.4 LPG - 1.6 CNG - 1.8 - 2.0 CDTi		11->	4806308	**CA031**	
1.6		12->	4806308	**CA031**	
1.6 CDTI - 2.0 BiTurbo CDTI		13->	4806308	**CA031**	

PEUGEOT

MODELLO MODEL	DIMENSIONI DIMENSIONS	ANNO YEAR	RIF ORIGINALE ORIGINAL REF	RIF CORAM CORAM REF	NOTE NOTES
106 I					
1.0		91->	5035.27	**CA009**	FRONT
1.1		91-96	5035.27	**CA009**	FRONT
1.3		93-96	5035.27	**CA009**	FRONT
1.4		91-96	5035.27	**CA009**	FRONT
1.4 D		92-96	5035.27	**CA009**	FRONT
1.5 D		94-96	5035.27	**CA009**	FRONT
1.6		94-96	5035.27	**CA009**	FRONT
106 II					
1.0 i - 1.1 i - 1.4 i		96->	5035.27	**CA009**	FRONT
1.5 D - 1.6 i - 1.6 S16		96->	5035.27	**CA009**	FRONT
107					
1.0 - 1.4 Hdi		mag-14	5035.57	**CA032**	
108					
1.0 Vti - 1.2		14->	5035.57	**CA032**	
109					
1.0 Vti 72		18->	5035.57	**CA032**	
205 I					
1.0		83->	5035.27	**CA009**	FRONT
1.1		83-87	5035.27	**CA009**	FRONT
1.4		83-87	5035.27	**CA009**	FRONT
1.6		86-87	5035.27	**CA009**	FRONT
1.6 GTI		84-87	5035.27	**CA009**	FRONT
1.7 Diesel		83-87	5035.27	**CA009**	FRONT
1.9 GTI		86-87	5035.27	**CA009**	FRONT

follow PEUGEOT

MODELLO MODEL	DIMENSIONI DIMENSIONS	ANNO YEAR	RIF ORIGINALE ORIGINAL REF	RIF CORAM CORAM REF	NOTE NOTES
205 I Cabriolet					
1.1 CJ		89-94	5035.27	**CA009**	FRONT
1.4 C Cat.		89-93	5035.27	**CA009**	FRONT
1.4 CJ		88-94	5035.27	**CA009**	FRONT
1.4 CT		86-88	5035.27	**CA009**	FRONT
1.6 CJ		92-94	5035.27	**CA009**	FRONT
1.6 CTI		86-90	5035.27	**CA009**	FRONT
1.9 CTI		87-94	5035.27	**CA009**	FRONT
205 II					
1.0 - 1.1		87-98	5035.27	**CA009**	FRONT
1.3 Rallye		87-90	5035.27	**CA009**	FRONT
1.4		87-98	5035.27	**CA009**	FRONT
1.4 Cat.		89-93	5035.27	**CA009**	FRONT
1.6		87-98	5035.27	**CA009**	FRONT
1.6 Aut.		90-98	5035.27	**CA009**	FRONT
1.6 GTI		87-89	5035.27	**CA009**	FRONT
1.7 Diesel		87-89	5035.27	**CA009**	FRONT
1.9 Diesel - 1.9 GTI		87-89	5035.27	**CA009**	FRONT
1.9 GTI Cat.		87-94	5035.27	**CA009**	FRONT
206					
1.1 i - 1.4 i		98->	5035.27	**CA009**	FRONT
1.6 i		98-00	5035.27	**CA009**	FRONT
1.9 D		98-01	5035.27	**CA009**	FRONT
305 Break					
1.3		82-86	5035.27	**CA009**	FRONT
1.5		82-86	5035.27	**CA009**	FRONT
1.6		83-88	5035.27	**CA009**	FRONT
1.9		84-88	5035.27	**CA009**	FRONT
1.9 Diesel		82-88	5035.27	**CA009**	FRONT
305 II					
1.3		82-85	5035.27	**CA009**	FRONT
1.5		85-90	5035.27	**CA009**	FRONT
1.6		82-88	5035.27	**CA009**	FRONT
1.9		82-88	5035.27	**CA009**	FRONT
1.9 Diesel		82-88	5035.27	**CA009**	FRONT

follow PEUGEOT

MODELLO MODEL	DIMENSIONI DIMENSIONS	ANNO YEAR	RIF ORIGINALE ORIGINAL REF	RIF CORAM CORAM REF	NOTE NOTES
306					
1.1		94->	5035.27	**CA009**	FRONT
1.4 SL		94->	5035.27	**CA009**	FRONT
1.6 SR		94-00	5035.27	**CA009**	FRONT
1.8 16V		97->	5035.27	**CA009**	FRONT
1.8 ST		94->	5035.27	**CA009**	FRONT
1.9 D		98->	5035.27	**CA009**	FRONT
1.9 D		98->	5035.29	**CA014**	FRONT
1.9 SLD		94->	5035.27	**CA009**	FRONT
1.9 SRDT		94->	5035.27	**CA009**	FRONT
2.0		97->	5035.27	**CA009**	FRONT
2.0 S16		94->	5035.27	**CA009**	FRONT
306 Break					
1.4		97->	5035.27	**CA009**	FRONT
1.6		97-00	5035.27	**CA009**	FRONT
1.8 16V		97->	5035.27	**CA009**	FRONT
1.9 D		97->	5035.27	**CA009**	FRONT
1.9 TD		97->	5035.27	**CA009**	FRONT
2.0		97->	5035.27	**CA009**	FRONT
2.0 HDI 90		99->	5035.27	**CA009**	FRONT
306 Cabriolet					
1.6		96-00	5035.27	**CA009**	FRONT
1.8		94->	5035.27	**CA009**	FRONT
1.8 16V		00->	5035.27	**CA009**	FRONT
2.0		94->	5035.27	**CA009**	FRONT
2.0 16V		97->	5035.27	**CA009**	FRONT
306 Coda Spiovente					
1.1 - 1.4		93->	5035.27	**CA009**	FRONT
1.6		93-00	5035.27	**CA009**	FRONT
1.8		93->	5035.27	**CA009**	FRONT
1.8 16V		97->	5035.27	**CA009**	FRONT
1.8 D		93->	5035.27	**CA009**	FRONT
1.9 D		93->	5035.27	**CA009**	FRONT
1.9 TD		93->	5035.27	**CA009**	FRONT
2.0 16V		97->	5035.27	**CA009**	FRONT
2.0 HDI 90		99->	5035.27	**CA009**	FRONT
2.0 S16		93->	5035.27	**CA009**	FRONT
2.0 XSI		93->	5035.27	**CA009**	FRONT

follow PEUGEOT

MODELLO MODEL	DIMENSIONI DIMENSIONS	ANNO YEAR	RIF ORIGINALE ORIGINAL REF	RIF CORAM CORAM REF	NOTE NOTES
308 II					
1.2 VTi 72 - 1.6 - 1.6 HDi - 1.6 HDi / BlueHDi 115 - 1.6 HTTP 125		13->	9800480380	**CA039**	
308 SW I					
1.6 HDi		set-14	9800480380	**CA039**	
308 SW II					
1.2 THP 130 - 1.6 HDi 92 - 1.6 THP 155 - 2.0 BlueHDi 150		14->	9800480380	**CA039**	
309 I					
1.1		85-89	5035.27	**CA009**	FRONT
1.3		85-89	5035.27	**CA009**	FRONT
1.4		89-89	5035.27	**CA009**	FRONT
1.6		85-89	5035.27	**CA009**	FRONT
1.9		85-89	5035.27	**CA009**	FRONT
1.9 D		86-89	5035.27	**CA009**	FRONT
1.9 GTI		86-89	5035.27	**CA009**	FRONT
309 II					
1.1		90-93	5035.27	**CA009**	FRONT
1.4		89-93	5035.27	**CA009**	FRONT
1.6		89-93	5035.27	**CA009**	FRONT
1.8 Diesel		89-93	5035.27	**CA009**	FRONT
1.9		89-93	5035.27	**CA009**	FRONT
1.9 Diesel		89-93	5035.27	**CA009**	FRONT
1.9 GTI		89-93	5035.27	**CA009**	FRONT
1.9 GTI 16V		89-90	5035.27	**CA009**	FRONT
405 I					
1.6		87-92	5035.27	**CA009**	FRONT
1.8 Turbo Diesel		88-92	5035.27	**CA009**	FRONT
1.9		87-92	5035.27	**CA009**	FRONT
1.9 Diesel		88-92	5035.27	**CA009**	FRONT
1.9 Injection		87-92	5035.27	**CA009**	FRONT

follow PEUGEOT

MODELLO MODEL	DIMENSIONI DIMENSIONS	ANNO YEAR	RIF ORIGINALE ORIGINAL REF	RIF CORAM CORAM REF	NOTE NOTES
405 I Break					
1.6		88-92	5035.27	**CA009**	FRONT
1.8 TD		88-92	5035.27	**CA009**	FRONT
1.9		88-92	5035.27	**CA009**	FRONT
1.9 D		88-92	5035.27	**CA009**	FRONT
405 II					
1.4		92-95	5035.27	**CA009**	FRONT
1.6		92-95	5035.27	**CA009**	FRONT
1.8		92-95	5035.27	**CA009**	FRONT
1.9 D		92-95	5035.27	**CA009**	FRONT
1.9 TD		92-95	5035.27	**CA009**	FRONT
2.0		92-95	5035.27	**CA009**	FRONT
2.0 16V		94-95	5035.27	**CA009**	FRONT
2.0 MI-16		92-95	5035.27	**CA009**	FRONT
2.0 T 16 X4		92-95	5035.27	**CA009**	FRONT
2.0 X4		92-95	5035.27	**CA009**	FRONT
405 II Break					
1.4 - 1.6 -1.8		92-96	5035.27	**CA009**	FRONT
1.9 D		92-96	5035.27	**CA009**	FRONT
1.9 TD		92-96	5035.27	**CA009**	FRONT
2.0		92-96	5035.27	**CA009**	FRONT
505					
2.2 Turbo Injection		84-88	5035.20	**CA009**	FRONT
2.8 GTI V6		86-93	5035.20	**CA009**	FRONT
806					
1.8		95-02	5035.29	**CA014**	FRONT
1.9 TD		95-02	5035.29	**CA014**	FRONT
2.0		94-02	5035.29	**CA014**	FRONT
2.0 16V		98-02	5035.29	**CA014**	FRONT
2.0 HDI		99-02	5035.29	**CA014**	FRONT
2.0 HDI 16V		99-02	5035 55	**CA014**	FRONT
2.0 Turbo		94-02	5035.29	**CA014**	FRONT
2.1 TD 12V		96-99	5035.29	**CA014**	FRONT

follow PEUGEOT

MODELLO MODEL	DIMENSIONI DIMENSIONS	ANNO YEAR	RIF ORIGINALE ORIGINAL REF	RIF CORAM CORAM REF	NOTE NOTES
807					
2,0 16V		05->	5035 55	**CA014**	FRONT
2.0		02->	5035.29	**CA014**	FRONT
2.0 Hdi FAP		02->	5035.29	**CA014**	FRONT
2.2		02->	5035.29	**CA014**	FRONT
2.2 Hdi FAP		02->	5035.29	**CA014**	FRONT
3.0 V6		02->	5035.29	**CA014**	FRONT
BOXER Autobus (230P)					
1.9 D		94-02	5035.30	**CA012**	FRONT
1.9 TD		94-02	5035.30	**CA012**	FRONT
1.9 TD 4x4		96-02	5035.30	**CA012**	FRONT
2.0 i		94-02	5035.30	**CA012**	FRONT
2.0 i 4x4		96-02	5035.30	**CA012**	FRONT
2.5 D		94-02	5035.30	**CA012**	FRONT
2.5 D 4x4		96-02	5035.30	**CA012**	FRONT
2.5 TD		94-02	5035.30	**CA012**	FRONT
2.5 TD 4x4		96-02	5035.30	**CA012**	FRONT
2.5 TDI		97-02	5035.30	**CA012**	FRONT
2.5 TDI 4x4		97-02	5035.30	**CA012**	FRONT
2.8 HDI		00-02	5035.30	**CA012**	FRONT
BOXER Autobus (244,Z_)					
2.0		02->	5035.30	**CA012**	FRONT
2.0 HDI		02->	5035.30	**CA012**	FRONT
2.2 HDI		02->	5035.30	**CA012**	FRONT
2.8 HDI		02->	5035.30	**CA012**	FRONT
2.8 HDI 4x4		02->	5035.30	**CA012**	FRONT
BOXER Furgonato (230L)					
1.9 D		94-02	5035.30	**CA012**	FRONT
1.9 TD		94-02	5035.30	**CA012**	FRONT
2.0 HDI		01-feb	5035.30	**CA012**	FRONT
2.0 i		94-02	5035.30	**CA012**	FRONT
2.5 D		94-02	5035.30	**CA012**	FRONT
2.5 D 4x4		99-02	5035.30	**CA012**	FRONT
2.5 TD		94-02	5035.30	**CA012**	FRONT
2.5 TDI		97-02	5035.30	**CA012**	FRONT
2.5 TDI 4x4		99-02	5035.30	**CA012**	FRONT
2.8 HDI		00-02	5035.30	**CA012**	FRONT

follow PEUGEOT

MODELLO MODEL	DIMENSIONI DIMENSIONS	ANNO YEAR	RIF ORIGINALE ORIGINAL REF	RIF CORAM CORAM REF	NOTE NOTES
BOXER Furgonato (244)					
2.0		02->	5035.30	**CA012**	FRONT
2.0 HDI		02->	5035.30	**CA012**	FRONT
2.2 HDI		02->	5035.30	**CA012**	FRONT
2.8 HDI		02->	5035.30	**CA012**	FRONT
2.8 HDI 4x4		02->	5035.30	**CA012**	FRONT
BOXER Pianale piatto/Autot.(244)					
2.0 HDI		02->	5035.30	**CA012**	FRONT
2.2 HDI		02->	5035.30	**CA012**	FRONT
2.8 HDI		02->	5035.30	**CA012**	FRONT
2.8 HDI 4x4		02->	5035.30	**CA012**	FRONT
BOXER Pianale piatto/Autotelaio					
1.9 TD		96-02	5035.30	**CA012**	FRONT
2.0 i		94-02	5035.30	**CA012**	FRONT
2.5 D		94-02	5035.30	**CA012**	FRONT
2.5 D 4x4		99-02	5035.30	**CA012**	FRONT
2.5 TD		94-02	5035.30	**CA012**	FRONT
2.5 TDI		97-02	5035.30	**CA012**	FRONT
2.5 TDI 4x4		99-02	5035.30	**CA012**	FRONT
2.8 HDI		00-02	5035.30	**CA012**	FRONT
EXPERT					
1.6 - 1.8		96->	5035.29	**CA014**	FRONT
1.9 D -1.9 TD		96->	5035.29	**CA014**	FRONT
2.0 - 2.0 HDI - 2.0 Hdi - 2.0 HDI 16V		00->	5035.29	**CA014**	FRONT
EXPERT Furgonato					
1.6 - 1.8		96->	5035.29	**CA014**	FRONT
1.6 Hdi 90 16V - 2.0 16V - 2.0 HDi 120 - 2.0 Hdi 140		07->	5035 55	**CA014**	FRONT
1.9 D - 1.9 TD		96->	5035.29	**CA014**	FRONT
1.9 D 70		98-06	5035 55	**CA014**	FRONT
2.0		02-giu	5035 55	**CA014**	FRONT
2.0 HDI		00-6	5035.29	**CA014**	FRONT
2.0 Hdi 100 - 2.0 Hdi 130		11->	5035 55	**CA014**	FRONT
2.0 Hdi 165		09->	5035 55	**CA014**	FRONT

follow PEUGEOT

MODELLO MODEL	DIMENSIONI DIMENSIONS	ANNO YEAR	RIF ORIGINALE ORIGINAL REF	RIF CORAM CORAM REF	NOTE NOTES
EXPERT Pianale piatto/Autotelaio					
1.6		96-00	5035.29	**CA014**	FRONT
1.6 Hdi 90 16V - 1.6 Hdi 90 8V - 2.0 Hdi 140		07->	5035 55	**CA014**	FRONT
1.9 D - 1.9 TD		96-00	5035.29	**CA014**	FRONT
2.0 Hdi 130		11->	5035 55	**CA014**	FRONT
2.0 Hdi 165		09->	5035 55	**CA014**	FRONT
EXPERT Tepee					
1.6 Hdi 90 16V - 2.0 16V - 2.0 Hdi 120 4x4 - 2.0 Hdi 140		07->	5035.55	**CA014**	FRONT
2.0 Hdi 100 - 2.0 Hdi 130		11->	5035.55	**CA014**	FRONT
2.0 Hdi 165		09->	5035.55	**CA014**	FRONT
PARTNER Combispace					
1.1		96->	5035.27	**CA009**	FRONT
1.4		96->	5035.27	**CA009**	FRONT
1.8		97->	5035.27	**CA009**	FRONT
1.9 D		96->	5035.27	**CA009**	FRONT
PARTNER Furgonato					
1.1		96->	5035.27	**CA009**	FRONT
1.4		96->	5035.27	**CA009**	FRONT
1.8 D		96->	5035.27	**CA009**	FRONT
1.9 D		96->	5035.27	**CA009**	FRONT

PORSCHE

MODELLO MODEL	DIMENSIONI DIMENSIONS	ANNO YEAR	RIF ORIGINALE ORIGINAL REF	RIF CORAM CORAM REF	NOTE NOTES
944					
2.5		87-90	9151063380	**CA009**	FRONT

RENAULT

MODELLO MODEL	DIMENSIONI DIMENSIONS	ANNO YEAR	RIF ORIGINALE ORIGINAL REF	RIF CORAM CORAM REF	NOTE NOTES
11					
1.1 (B/C371)		83-86	7700803635	**CA009**	FRONT
1.2 (B/C37S)		84-88	7700803635	**CA009**	FRONT
1.4 (B/C372, B/C37C)		83-88	7700803635	**CA009**	FRONT
1.4 (B/C373)		83-85	7700803635	**CA009**	FRONT
1.4 (B/C373, B/C37R)		83-88	7700803635	**CA009**	FRONT
1.4 Turbo (B/C375)		84-88	7700803635	**CA009**	FRONT
1.6 D (B/C374)		83-88	7700803635	**CA009**	FRONT
1.7 (B/C376)		83-87	7700803635	**CA009**	FRONT
1.7 (B/C37D, B/C37E)		87-88	7700803635	**CA009**	FRONT
1.7 (B/C37F, B/C37L, B/C37N)		84-88	7700803635	**CA009**	FRONT
19 I					
1.4 - 1.4(B/C532) Cat.		88-92	7700803635	**CA009**	FRONT
1.4 (B/C53P)		89-89	7700803635	**CA009**	FRONT
1.7 (B/C53B, B/C53C)		88-92	7700803635	**CA009**	FRONT
1.8 16V (B/C53D)		89-92	7700803635	**CA009**	FRONT
1.9 D (B/C534, B/C53J)		88-92	7700803635	**CA009**	FRONT
19 I Cabriolet					
1.7		91-92	7700803635	**CA009**	FRONT
1.8 16V		91-92	7700803635	**CA009**	FRONT
19 I Chamade					
1.4 (L532, L53P)		88-92	7700803635	**CA009**	FRONT
1.7 (L53B, L53C, L53F)		88-92	7700803635	**CA009**	FRONT
1.8 16V (L53D)		89-92	7700803635	**CA009**	FRONT
1.9 D (L534, L53J)		89-92	7700803635	**CA009**	FRONT
1.9 TD(L53K)		90-92	7700803635	**CA009**	FRONT
19 II					
1.4 (B/C532, B/C535)		92-95	7700803635	**CA009**	FRONT
1.7 (B/C53B, B/C53C)		92-95	7700803635	**CA009**	FRONT
1.8 (5/353A)		92-95	7700803635	**CA009**	FRONT
1.8 (5/353F, B/C538)		94-95	7700803635	**CA009**	FRONT
1.8 (B/C538, B/C53Y)		92-95	7700803635	**CA009**	FRONT
1.8 16V (B/C53D)		92-95	7700803635	**CA009**	FRONT
1.9 D (B/C53J)		92-95	7700803635	**CA009**	FRONT
1.9 DTI (B/C53T)		92-95	7700803635	**CA009**	FRONT

follow RENAULT

MODELLO MODEL	DIMENSIONI DIMENSIONS	ANNO YEAR	RIF ORIGINALE ORIGINAL REF	RIF CORAM CORAM REF	NOTE NOTES
19 II Cabriolet					
1.7 (D53C)		92-93	7700803635	**CA009**	FRONT
1.8 (853A)		93-96	7700803635	**CA009**	FRONT
1.8 (D53V, 853F,D53C)		94-96	7700803635	**CA009**	FRONT
1.8 (D53Y)		92-96	7700803635	**CA009**	FRONT
1.8 16V (D53D)		92-96	7700803635	**CA009**	FRONT
19 II Chamade					
1.4 (532)		92-95	7700803635	**CA009**	FRONT
1.4 (L535)		93-95	7700803635	**CA009**	FRONT
1.7 (L53B)		92-95	7700803635	**CA009**	FRONT
1.8 (453A/F)		92-95	7700803635	**CA009**	FRONT
1.8 (L538)		92-94	7700803635	**CA009**	FRONT
1.8 (L53V, L538)		94-95	7700803635	**CA009**	FRONT
1.8 (L53Y)		92-95	7700803635	**CA009**	FRONT
1.8 16V (L53D)		92-95	7700803635	**CA009**	FRONT
1.9 D (L53J) - 1.9 DTI (L53T)		92-95	7700803635	**CA009**	FRONT
21					
1.7 (B48E, B48F)		89-92	7700803635	**CA009**	FRONT
1.9 D (B48H, B481)		89-93	7700803635	**CA009**	FRONT
2.0 (B48R/Y)		90-92	7700803635	**CA009**	FRONT
2.0 4x4 (B48R/Y)		90-92	7700803635	**CA009**	FRONT
2.1 D (B480)		92-94	7700803635	**CA009**	FRONT
2.1 D (B48V/B480)		89-92	7700803635	**CA009**	FRONT
2.1 Turbo-D (B486, B488, B48V)		89-94	7700803635	**CA009**	FRONT
2.2 (B48K)		89-94	7700803635	**CA009**	FRONT
2.2 4x4 (B48K)		90-94	7700803635	**CA009**	FRONT

follow RENAULT

MODELLO MODEL	DIMENSIONI DIMENSIONS	ANNO YEAR	RIF ORIGINALE ORIGINAL REF	RIF CORAM CORAM REF	NOTE NOTES
21 Familiare					
1.7 (K/S481)		86-93	7700803635	**CA009**	FRONT
1.7 (K/S482)		86-88	7700803635	**CA009**	FRONT
1.7 (K48E)		89-93	7700803635	**CA009**	FRONT
1.7 (K48F) Cat.		88-93	7700803635	**CA009**	FRONT
1.7 (K48M)		86-89	7700803635	**CA009**	FRONT
1.7 (K48N)		87-89	7700803635	**CA009**	FRONT
2.0 (K483)		86-88	7700803635	**CA009**	FRONT
2.0 (K48C)		86-93	7700803635	**CA009**	FRONT
2.0 (K48R)		90-94	7700803635	**CA009**	FRONT
2.1 D (K/S486)		86-90	7700803635	**CA009**	FRONT
2.1 D (K/S48V, K/S480)		89-92	7700803635	**CA009**	FRONT
2.1 D (K480)		92-95	7700803635	**CA009**	FRONT
2.1 D 4x4 (K486)		88-92	7700803635	**CA009**	FRONT
2.1 Turbo-D (K48A, K48W, K487, K488)		86-93	7700803635	**CA009**	FRONT
2.2 (K48K)		86-93	7700803635	**CA009**	FRONT
2.2 4x4 (K48K)		86-93	7700803635	**CA009**	FRONT
21 Tre volumi					
1.7 (L481)		86-87	7700803635	**CA009**	FRONT
1.7 (L482)		86-93	7700803635	**CA009**	FRONT
1.7 (L48E)		86-94	7700803635	**CA009**	FRONT
1.7 (L48M, L48F)		86-94	7700803635	**CA009**	FRONT
1.7 (L48N)		87-89	7700803635	**CA009**	FRONT
1.9 D (L48H, L481)		89-93	7700803635	**CA009**	FRONT
2.0		91-93	7700803635	**CA009**	FRONT
2.0 (L483)		86-88	7700803635	**CA009**	FRONT
2.0 (L48C)		86-93	7700803635	**CA009**	FRONT
2.0 (L48R)		90-94	7700803635	**CA009**	FRONT
2.0 4x4 (L48R)		89-94	7700803635	**CA009**	FRONT
2.0 Turbo (L485)		87-90	7700803635	**CA009**	FRONT
2.0 Turbo (L48L)		90-92	7700803635	**CA009**	FRONT
2.0 Turbo 4x4		89-93	7700803635	**CA009**	FRONT
2.0 Turbo 4x4 (L48L)		90-92	7700803635	**CA009**	FRONT
2.1 D (L480)		92-94	7700803635	**CA009**	FRONT
2.1 D (L486)		86-89	7700803635	**CA009**	FRONT
2.1 D (L48V, L480)		89-94	7700803635	**CA009**	FRONT
2.1 Turbo-D (L48A, L48W, L487, L488)		86-94	7700803635	**CA009**	FRONT
2.2 (L48K)		86-94	7700803635	**CA009**	FRONT
2.2 4x4 (L48K)		90-94	7700803635	**CA009**	FRONT

follow RENAULT

MODELLO MODEL	DIMENSIONI DIMENSIONS	ANNO YEAR	RIF ORIGINALE ORIGINAL REF	RIF CORAM CORAM REF	NOTE NOTES
25					
2.4 VS Turbo (B295)		84-90	7601502	**CA006**	FRONT
2.7 V6 Injection		84-89	7601502	**CA006**	FRONT
9					
1.1 (L421)		81-87	7700803635	**CA009**	FRONT
1.2 (L42S)		85-88	7700803635	**CA009**	FRONT
1.4 (L422, L42C)		81-88	7700803635	**CA009**	FRONT
1.4 (L423)		81-85	7700803635	**CA009**	FRONT
1.4 (L423, L42R)		85-88	7700803635	**CA009**	FRONT
1.4 Automatik (L423)		81-85	7700803635	**CA009**	FRONT
1.4 Turbo		86-89	7700803635	**CA009**	FRONT
1.4 Turbo (L425)		84-86	7700803635	**CA009**	FRONT
1.6 D (L424)		82-88	7700803635	**CA009**	FRONT
1.7 (L426, L42E, L42N)		84-88	7700803635	**CA009**	FRONT
1.7 (L42F, L42L)		86-88	7700803635	**CA009**	FRONT
AVANTIME					
2.0 16V Turbo		01-mar	7700803635	**CA009**	FRONT
2.2 DCI		02->	7700803635	**CA009**	FRONT
3.0 V6		01-mar	7700803635	**CA009**	FRONT
CAPTUR					
0.9 TCe 90 - 1.2 TCe 120 - 1.5 dCi 90 -		13->	4533210084	**CA035**	
1.3 TCe 150		18->	4533210084	**CA035**	
1.5 dCi 110 -		15->	4533210084	**CA035**	
CLIO I					
1.1		91-98	6001025850	**CA011**	FRONT
1.2 (5/357Y, 5/357K)		96-98	6001025850	**CA011**	FRONT
1.2 (B/C/S577)		96-96	6001025850	**CA011**	FRONT
1.2 (B/C/S57A,B/C57S,5/357F,5/357J,		90-98	6001025850	**CA011**	FRONT
1.2 (B/C57R)		91-96	6001025850	**CA011**	FRONT
1.4		91-98	6001025850	**CA011**	FRONT
1.8 (B/C578,B/C57C,B/C57U)		91-98	6001025850	**CA011**	FRONT
1.8 16V (C57D)		91-94	6001025850	**CA011**	FRONT
1.8 Rsi (B/C579,B/C57H)		93-98	6001025850	**CA011**	FRONT
1.9 D (B/C/S576,B/C/S57L)		91-98	6001025850	**CA011**	FRONT
Williams (B/C57M)		94-98	6001025850	**CA011**	FRONT

follow RENAULT

MODELLO MODEL	DIMENSIONI DIMENSIONS	ANNO YEAR	RIF ORIGINALE ORIGINAL REF	RIF CORAM CORAM REF	NOTE NOTES
CLIO II					
1.2		98->	6001025850	**CA011**	FRONT
1.2 16V (B/CB05)		01->	6001025850	**CA011**	FRONT
1.4 (B/CB0C)		98->	6001025850	**CA011**	FRONT
1.4 16V (B/CB0L,B/CB0P)		99-00	6001025850	**CA011**	FRONT
1.5 DCI (B/CB07,B/C/B08)		01->	6001025850	**CA011**	FRONT
1.6 (B/CB0D)		98->	6001025850	**CA011**	FRONT
1.6 16V (CB0T,CB0H)		98->	6001025850	**CA011**	FRONT
1.9 D (B/CB0E)		98->	6001025850	**CA011**	FRONT
1.9 DTI (B/CB0U)		00->	6001025850	**CA011**	FRONT
V6 Sport (CB1A)		00-02	6001025850	**CA011**	FRONT
CLIO III					
1.2 16V - 1.4 16V - 1.5 dCi - 1.6 16V		05->	4533210084	**CA035**	
1.2 16V - 1.4 16V - 1.5 dCi - 1.6 16V		05->	8200948647	**CA030**	
1.2 16V Hi-Flex- 1.2 Ethanol - 2.0 16V Sport		08->	4533210084	**CA035**	
1.2 16V Hi-Flex- 1.2 Ethanol - 2.0 16V Sport		08->	8200948647	**CA030**	
1.6 16V GT		09->	4533210084	**CA035**	
1.6 16V GT		09->	8200948647	**CA030**	
2.0 16V		06->	4533210084	**CA035**	
2.0 16V		06->	8200948647	**CA030**	
CLIO III Furgonato					
1.2		mag-14	8200948647	**CA030**	
1.2 - 1.5 dCi		mag-14	4533210084	**CA035**	
CLIO IV					
0.9 TCe - 1.2 16V - 1.5 dCi 75 - 1.5 dCi 90		12->	4533210084	**CA035**	
0.9 Tce 90 LPG - 1.5 dCi 110		16->	4533210084	**CA035**	
1.2 16V		15->	4533210084	**CA035**	
1.2 TCe 120 - 1.6 RS		13->	4533210084	**CA035**	
CLIO IV Grandtour					
0.9 TCe - 1.2 16V - 1.2 TCe 120 - 1.5 dCi 75 - 1.5 dCi 90		13->	4533210084	**CA035**	
1.5 dCi 110		16->	4533210084	**CA035**	

follow RENAULT

MODELLO MODEL	DIMENSIONI DIMENSIONS	ANNO YEAR	RIF ORIGINALE ORIGINAL REF	RIF CORAM CORAM REF	NOTE NOTES
CLIO Sportour					
1.2 16V - 1.2 16V Hi-Flex - 1.6 16V		08->	8200948647	**CA030**	
1.2 16V - 1.6 16V		08->	4533210084	**CA035**	
1.5 dCi		08-dic	4533210084	**CA035**	
1.5 dCi		08-dic	8200948647	**CA030**	
ESPACE III					
1.9 DTI (JE0M)		99->	7700803635	**CA009**	FRONT
2.0 (JE0A)		96-00	7700803635	**CA009**	FRONT
2.0 16V (JE0L, JE0N, JE02)		98->	7700803635	**CA009**	FRONT
2.2 12V TD (JE0E, JE0H, JE0P)		96-00	7700803635	**CA009**	FRONT
2.2 DCI (JE0K, JE0S)		00->	7700803635	**CA009**	FRONT
3.0 (JE0D)		96-98	7700803635	**CA009**	FRONT
3.0 V6 24V (JE0G, JE0R)		98->	7700803635	**CA009**	FRONT
FLUENCE					
1.5 DCI - 1.6 16V - 2.0 16V		10->	543251867R	**CA023**	
Z.E.		12->	543251867R	**CA023**	
GRAND SCENIC II					
1.5 dCi - 1.6 - 1.9 dCi - 2.0		04->	8200106131	**CA029**	
2.0 dCi		05->	8200106131	**CA029**	
GRAND SCENIC III					
1.2 TCe		12->	543251867R	**CA023**	
1.4 16V - 1.5 DCI - 1.6 16V - 1.9 DCI		09->	543251867R	**CA023**	
2.0 16V - 2.0 DCI		09->	543251867R	**CA023**	
KANGOO					
1.2 (KC0A,KC0K,KC0F,KC01)		98->	6001025850	**CA011**	FRONT
1.2 16V (KC03,KC05,KC06,KC0T,KC0W)		01->	6001025850	**CA011**	FRONT
1.4 (KC0C,KC0H,KC0B,KC0M)		98->	6001025850	**CA011**	FRONT
1.6 16V		01->	6001025850	**CA011**	FRONT
1.6 16V 4x4 (KC0P,KC0S,KC0L)		01->	6001025850	**CA011**	FRONT
1.9 DTI (KC0U)		00->	6001025850	**CA011**	FRONT
D 55 1.9 (KC0D)		98->	6001025850	**CA011**	FRONT
D 65 1.9 (KC0E,KC02,KC0J,KC0N)		98->	6001025850	**CA011**	FRONT

follow RENAULT

MODELLO MODEL	DIMENSIONI DIMENSIONS	ANNO YEAR	RIF ORIGINALE ORIGINAL REF	RIF CORAM CORAM REF	NOTE NOTES
KANGOO / GRAND KANGOO					
1.2 Tce 115		13->	8200200017	**CA030**	
1.5 dCi - 1.6 - 1.6 16V - 1.6 16V Hi-Flex - 1.6 16V LPG		08->	8200200017	**CA030**	
KANGOO BE POP					
1.5 dCi - 1.6		09->	8200200017	**CA030**	
1.5 dCi 75		10->	8200200017	**CA030**	
KANGOO Express					
1.2 (FC01,FC0A,FC0F)		98->	6001025850	**CA011**	FRONT
1.4 (FC0C,FC0B,FC0H,FC0M)		98->	6001025850	**CA011**	FRONT
1.5 dCi		08->	8200200017	**CA030**	
1.5 dCi 110 - 1.5 dCi 75		10->	8200200017	**CA030**	
1.5 dCi 85 - 1.6 - 1.6 16V Flex		08->	8200200017	**CA030**	
1.5 dCi 90		09->	8200200017	**CA030**	
1.9 DTI (FC0U)		00->	6001025850	**CA011**	FRONT
D 55 1.9 (FC0D)		98->	6001025850	**CA011**	FRONT
D 65 1.9 (FC0E,FC02,FC0J,FC0N)		98->	6001025850	**CA011**	FRONT
Z.E.		11->	8200200017	**CA030**	
KOLEOS I					
2.0 dCi - 2.0 dCi 4x4 - 2.5 - 2.5 4x4		08->	8200200017	**CA030**	
LAGUNA					
1.6 16V (B568, B561)		97-01	7700803635	**CA009**	FRONT
1.8 (B56A/B)		93-01	7700803635	**CA009**	FRONT
1.8 (B56S/T/0)		95-01	7700803635	**CA009**	FRONT
1.8 (B56Z)		95-01	7700803635	**CA009**	FRONT
1.8 16V (B563, B564)		98-01	7700803635	**CA009**	FRONT
1.9 DCI (B56W)		99-01	7700803635	**CA009**	FRONT
1.9 DTI (B56J)		97-01	7700803635	**CA009**	FRONT
2.0 (BC56C/H/N)		93-01	7700803635	**CA009**	FRONT
2.0 16V (B56D/M)		95-01	7700803635	**CA009**	FRONT
2.2 D (B56F/2)		93-01	7700803635	**CA009**	FRONT
2.2 DTI (B569)		96-01	7700803635	**CA009**	FRONT
3.0 (B56E/R, B565)		93-01	7700803635	**CA009**	FRONT
3.0 24V (B56V)		97-01	7700803635	**CA009**	FRONT

follow RENAULT

MODELLO MODEL	DIMENSIONI DIMENSIONS	ANNO YEAR	RIF ORIGINALE ORIGINAL REF	RIF CORAM CORAM REF	NOTE NOTES
LAGUNA Coupé					
1.5 DCI		12->	543251867R	**CA023**	
2.0 16V Turbo - 2.0 DCI - 2.0 DCI GT		08->	543251867R	**CA023**	
2.0 GT - 3.0 DCI - 3.5 V6		08->	543251867R	**CA023**	
LAGUNA Grandtour					
1.6 16V (K568)		97-01	7700803635	**CA009**	FRONT
1.8 (K56S/T/0, K56Z)		95-01	7700803635	**CA009**	FRONT
1.8 16V (K563, K564)		98-01	7700803635	**CA009**	FRONT
1.9 DCI (K56W)		99-01	7700803635	**CA009**	FRONT
1.9 DTI (K56J)		97-01	7700803635	**CA009**	FRONT
2.0 (K56C/H)		95-01	7700803635	**CA009**	FRONT
2.0 16V (K56D/M)		95-01	7700803635	**CA009**	FRONT
2.2 D (K56F/2, S56F)		95-01	7700803635	**CA009**	FRONT
2.2 DTI (K569)		96-01	7700803635	**CA009**	FRONT
3.0 (K56R, K565)		96-01	7700803635	**CA009**	FRONT
3.0 24V (K56V)		97-01	7700803635	**CA009**	FRONT
LAGUNA III					
1.5 DCI - 1.6 16V - 2.0 16V - 2.0 16V Hi-Flex		07->	543251867R	**CA023**	
2.0 16V Turbo - 2.0 DCI		07->	543251867R	**CA023**	
2.0 DCI GT - 2.0 GT - 3.0 DCI		08->	543251867R	**CA023**	
LAGUNA III Sportour					
1.5 DCI - 1.6 16V - 2.0 16V - 2.0 16V Turbo		07->	543251867R	**CA023**	
2.0 16V Hi-Flex - 2.0 DCI		07->	543251867R	**CA023**	
2.0 DCI GT - 2.0 GT - 3.0 DCI		08->	543251867R	**CA023**	
LATITUDE					
1.5 DCI		10->	543251867R	**CA023**	
2.0 16V - 2.0 DCI - 2.0 DCI 150		11->	543251867R	**CA023**	
2.0 DCI 175 - 3.0 DCI 240		11->	543251867R	**CA023**	

follow RENAULT

MODELLO MODEL	DIMENSIONI DIMENSIONS	ANNO YEAR	RIF ORIGINALE ORIGINAL REF	RIF CORAM CORAM REF	NOTE NOTES
MEGANE Cabriolet					
1.4 16V (EA0D, EA1H, EA0W, EA10)		99->	7700803635	**CA009**	FRONT
1.6 16V (AE0B, AE04, AE11)		99->	7700803635	**CA009**	FRONT
1.6 e (EA0F)		96-99	7700803635	**CA009**	FRONT
2.0 (EA0G)		97->	7700803635	**CA009**	FRONT
2.0 16V (EA0H)		96-99	7700803635	**CA009**	FRONT
2.0 16V IDE (EA03, EA0P,EA14)		99->	7700803635	**CA009**	FRONT
2.0 i (EA0G)		99->	7700803635	**CA009**	FRONT
MEGANE CC					
1.2 TCE		13->	543251867R	**CA023**	
1.6 DCI - 1.6 16V - 1.6 DCI - 1.9 DCI		10->	543251867R	**CA023**	
MEGANE Classic					
1.4 (LA0E, LA0V)		96->	7700803635	**CA009**	FRONT
1.4 16V (LA0D, LA1H, IA0W, LA10)		99->	7700803635	**CA009**	FRONT
1.6 16V (LA04, LA11, LA0B, LA1C, LA1J)		99->	7700803635	**CA009**	FRONT
1.6 e (LA0F, LA0S)		96-99	7700803635	**CA009**	FRONT
1.6 i (LA0L)		96-99	7700803635	**CA009**	FRONT
1.8 16V (LA06, LA12, LA1A, LA1R)		01->	7700803635	**CA009**	FRONT
1.9 D (LA0A, LA0U)		96->	7700803635	**CA009**	FRONT
1.9 DCI (LA05, LA1F)		01->	7700803635	**CA009**	FRONT
1.9 DTI (LA08, LA0N)		97-01	7700803635	**CA009**	FRONT
1.9 DTI (LA0K, LA0Y)		96->	7700803635	**CA009**	FRONT
1.9 DTI (LA1U)		01->	7700803635	**CA009**	FRONT
2.0 i (LA07, LA0G)		96->	7700803635	**CA009**	FRONT
MEGANE Coach					
1.4 16V (DA0D, DA1H, DA0W, DA10)		99->	7700803635	**CA009**	FRONT
1.6 16V (DA0B, DA04, DA11)		99->	7700803635	**CA009**	FRONT
1.6 e (DA0F)		96-99	7700803635	**CA009**	FRONT
1.9 DCI (DA05, DA1F)		01->	7700803635	**CA009**	FRONT
1.9 DTI (DA0N)		97-01	7700803635	**CA009**	FRONT
2.0 16V (DA0H)		96-99	7700803635	**CA009**	FRONT
2.0 16V IDE (DA03, DA0P, DA14)		99->	7700803635	**CA009**	FRONT
2.0 i (DA0G)		96->	7700803635	**CA009**	FRONT

follow RENAULT

MODELLO MODEL	DIMENSIONI DIMENSIONS	ANNO YEAR	RIF ORIGINALE ORIGINAL REF	RIF CORAM CORAM REF	NOTE NOTES
MEGANE Grandtour					
1.4 16V (KA0D, KA1H, KA0W, KA10)		99->	7700803635	**CA009**	FRONT
1.4 e (KA0V)		99->	7700803635	**CA009**	FRONT
1.6 16V (KA0B, KA04, KA11)		99->	7700803635	**CA009**	FRONT
1.6 e (KA0F)		99->	7700803635	**CA009**	FRONT
1.8 16V (KA0S, KA12, KA1A, KA1R)		01->	7700803635	**CA009**	FRONT
1.9 D		99->	7700803635	**CA009**	FRONT
1.9 DCI (KA0D, KA1F)		01->	7700803635	**CA009**	FRONT
1.9 DTI (KA0N)		99-01	7700803635	**CA009**	FRONT
1.9 DTI (KA1U)		01->	7700803635	**CA009**	FRONT
MEGANE I					
1.4 16V (BA0D, BA1H, BA0W, BA10)		99->	7700803635	**CA009**	FRONT
1.4 e (BA0E, BA0V)		96->	7700803635	**CA009**	FRONT
1.4 Eco (BA0T)		96-99	7700803635	**CA009**	FRONT
1.6 16V (BA11, BA04, BA0B, BA1J)		99->	7700803635	**CA009**	FRONT
1.6 e (BA0F, BA0S)		96-99	7700803635	**CA009**	FRONT
1.6 i (BA0L)		96-99	7700803635	**CA009**	FRONT
1.9 D Eco (B/SA0U, BA0A)		96->	7700803635	**CA009**	FRONT
1.9 DCI (BA05, BA1F)		01->	7700803635	**CA009**	FRONT
1.9 DT (B/SA0K, B/SA0Y)		96->	7700803635	**CA009**	FRONT
1.9 DTI (BA08, BA0N)		97-01	7700803635	**CA009**	FRONT
1.9 DTI (BA1U)		01->	7700803635	**CA009**	FRONT
2.0 16V (BA0H)		96->	7700803635	**CA009**	FRONT
2.0 i (BA0G)		96->	7700803635	**CA009**	FRONT
MEGANE II					
1.4 16V - 1.5 dCi - 1.6 16V - 1.9 dCi - 2.0 16V		02-ago	8200106131	**CA029**	
1.6 - 2.0 dCi		05-ago	8200106131	**CA029**	
1.6 Flex-Fuel -		07-ago	8200106131	**CA029**	
2.0		06-ago	8200106131	**CA029**	
2.0 16V Turbo		04-ago	8200106131	**CA029**	
2.0 Renault Sport		04-set	8200106131	**CA029**	
MEGANE II Coupé-Cabriolet					
1.6 - 1.9 dCi - 2.0		03-set	8200485734	**CA030**	
1.6 16V		06-ago	8200485734	**CA031**	
2.0 16V		04-set	8200485734	**CA032**	
2.0 dCi		05-set	8200485734	**CA033**	

follow RENAULT

MODELLO MODEL	DIMENSIONI DIMENSIONS	ANNO YEAR	RIF ORIGINALE ORIGINAL REF	RIF CORAM CORAM REF	NOTE NOTES
MEGANE II Station Wagon					
1.4- 1.5 dCi - 1.6 - 1.9 dCi - 2.0		03-set	8200106131	**CA029**	
1.6 16V		06-set	8200106131	**CA029**	
1.6 16V Hi-Flex		08-set	8200106131	**CA029**	
2.0 dCi		05-set	8200106131	**CA029**	
MEGANE II Tre volumi					
1.5 dCi		03-ott	8200106131	**CA029**	
1.6 16V		06->	8200106131	**CA029**	
1.9 dCi		03-mag	8200106131	**CA029**	
MEGANE III 2 Volumi					
1.9 DCI - 2.0 TCE		08->	543251867R	**CA023**	
2.0 CVT - 2.0 DCI		09->	543251867R	**CA023**	
MEGANE III Coupé					
Tutti i tipi/All types/Tous types		09->	543251867R	**CA023**	
1.2 TCE		12->	543251867R	**CA023**	
1.4 TCE		09->	543251867R	**CA023**	
1.5 DCI - 1.6 16V - 1.6 16V Bifuel		08->	543251867R	**CA023**	
1.6 DCI		11->	543251867R	**CA023**	
1.9 DCI - 2.0 R.S. - 2.0 TCE		08->	543251867R	**CA023**	
2.0 CVT - 2.0 DCI		09->	543251867R	**CA023**	
MEGANE III Grandtour					
1.2 TCE		12->	543251867R	**CA023**	
1.5 DCI - 1.6 16V		09->	543251867R	**CA023**	
1.6 16V Bifuel		08->	543251867R	**CA023**	
1.6 DCI		11->	543251867R	**CA023**	
1.9 DCI - 2.0 CVT - 2.0 DCI		09->	543251867R	**CA023**	
2.0 TCE		08->	543251867R	**CA023**	
MEGANE Scenic					
1.4 i (JA0E)		97-99	7700803635	**CA009**	FRONT
1.6 e (JA0F)		97-99	7700803635	**CA009**	FRONT
1.6 i (JA0L)		97-99	7700803635	**CA009**	FRONT
1.9 DT (JA0D, JA0Y)		97-99	7700803635	**CA009**	FRONT
1.9 DTI (JA0N)		97-99	7700803635	**CA009**	FRONT
2.0 i (JA0G)		97-99	7700803635	**CA009**	FRONT

follow RENAULT

MODELLO MODEL	DIMENSIONI DIMENSIONS	ANNO YEAR	RIF ORIGINALE ORIGINAL REF	RIF CORAM CORAM REF	NOTE NOTES
MODUS / GRAND MODUS					
1.2 - 1.4 - 1.5 dCi - 1.6		04->	8200200017	**CA030**	
1.2 - 1.5 dCi - 1.6		04->	4533210084	**CA035**	
1.2 16V		07->	4533210084	**CA035**	
1.2 16V		07->	8200200017	**CA030**	
1.2 16V Hi-Flex		08->	8200200017	**CA030**	
1.2 16V Hi-Flex		08->	4533210084	**CA035**	
1.5 dCi 75 - 1.5 dCi 90		10->	4533210084	**CA035**	
NEVADA					
Tutti i tipi/All types/Tous types		90->	5035.27	**CA009**	FRONT
RAPID Furgonato					
1.2 (F406, G40A)		91-98	7700803635	**CA009**	FRONT
1.4 (F402)		85-91	7700803635	**CA009**	FRONT
1.4 (F407) Cat.		88-98	7700803635	**CA009**	FRONT
1.4 (F40D)		94-98	7700803635	**CA009**	FRONT
1.4 (F40M)		86-91	7700803635	**CA009**	FRONT
1.4 (F40U, F40V)		91-98	7700803635	**CA009**	FRONT
1.6 D (F404)		86-98	7700803635	**CA009**	FRONT
1.9 D (F40R)		94-98	7700803635	**CA009**	FRONT
SAFRANE					
Tutti i tipi/All types/Tous types		92->	5035.27	**CA009**	FRONT
SAFRANE I					
2.0 12V (B542, B54E)		92-96	7700803635	**CA009**	FRONT
2.1 DTI (B546)		93-96	7700803635	**CA009**	FRONT
2.2 (B541, B543)		92-96	7700803635	**CA009**	FRONT
2.5 DTI (B548)		92-96	7700803635	**CA009**	FRONT
3.0 Biturbo 4x4 (B545)		93-96	7700803635	**CA009**	FRONT
3.0 V6 (B54B, B544)		92-96	7700803635	**CA009**	FRONT
3.0 V6 4x4 (B54B, B544)		92-96	7700803635	**CA009**	FRONT
SAFRANE II					
2.0 16V (B54L)		96-00	7700803635	**CA009**	FRONT
2.2 DTI (B54G)		96-00	7700803635	**CA009**	FRONT
2.5 20V (B54F)		96-00	7700803635	**CA009**	FRONT
2.9 24V (B54N)		99-00	7700803635	**CA009**	FRONT
3.0 V6		96-00	7700803635	**CA009**	FRONT

follow RENAULT

MODELLO MODEL	DIMENSIONI DIMENSIONS	ANNO YEAR	RIF ORIGINALE ORIGINAL REF	RIF CORAM CORAM REF	NOTE NOTES
SCENIC					
1.4 16V (JA0D, JA1H, JA0W, JA10)		99->	7700803635	**CA009**	FRONT
1.6 16V (JA0B, JA04, JA11)		99->	7700803635	**CA009**	FRONT
1.8 16V (JA12, JA1R, JA1M, JA1A)		01->	7700803635	**CA009**	FRONT
1.9 DCI (JA05, JA1F)		00->	7700803635	**CA009**	FRONT
1.9 DTI (JA0N)		99->	7700803635	**CA009**	FRONT
1.9 DTI (JA1U)		01->	7700803635	**CA009**	FRONT
2.0 16V (JA1B, JA1D)		00->	7700803635	**CA009**	FRONT
2.0 16V IDE		99->	7700803635	**CA009**	FRONT
2.0 16V RX4		00->	7700803635	**CA009**	FRONT
SCENIC II					
1.4 - 1.5 dCi - 1.6 - 1.9 dCi - 2.0		03->	8200824774	**CA029**	
1.6 16V - 2.0 dCi		05->	8200824774	**CA029**	
1.9 D		06->	8200824774	**CA029**	
2.0 16V Turbo		04->	8200824774	**CA029**	
SCENIC III					
1.2 TCE		12->	543251867R	**CA023**	
1.4 16V - 1.5 DCI - 1.6 16V		09->	543251867R	**CA023**	
1.6 DCI		11->	543251867R	**CA023**	
1.6 E85 - 1.9 DCI - 2.0 16V - 2.0 DCI		09->	543251867R	**CA023**	
SUPER 5					
1.0 (B/C/400)		84-88	7700803635	**CA009**	FRONT
1.1 (B/C/401)		84-88	7700803635	**CA009**	FRONT
1.1 (B/C/401, B/C40H)		86-95	7700803635	**CA009**	FRONT
1.4 (B/C/407) Cat.		85-96	7700803635	**CA009**	FRONT
1.4 (B/C402)		84-88	7700803635	**CA009**	FRONT
1.4 (B/C403)		84-89	7700803635	**CA009**	FRONT
1.4 (B/C40M)		87-90	7700803635	**CA009**	FRONT
1.4 Turbo (C405)		85-90	7700803635	**CA009**	FRONT
1.6 D (B/C/404)		85-96	7700803635	**CA009**	FRONT
1.7 (B/C408)		86-95	7700803635	**CA009**	FRONT
1.7 i (C409)		86-91	7700803635	**CA009**	FRONT
TRAFIC Autobus (TXW)					
2.2 4x4		89-94	4400895	**CA015**	FRONT

follow RENAULT

MODELLO MODEL	DIMENSIONI DIMENSIONS	ANNO YEAR	RIF ORIGINALE ORIGINAL REF	RIF CORAM CORAM REF	NOTE NOTES
TWINGO					
1.2 (C063, C064)		93-96	6001025850	**CA011**	FRONT
1.2 (C066, C068, C067)		96->	6001025850	**CA011**	FRONT
1.2 16V (C06C,C06D,C06K)		01->	6001025850	**CA011**	FRONT
TWINGO III					
0.9 TCe 90 - 1.0 SCe 70		14->	4533210084	**CA035**	

SAAB

MODELLO MODEL	DIMENSIONI DIMENSIONS	ANNO YEAR	RIF ORIGINALE ORIGINAL REF	RIF CORAM CORAM REF	NOTE NOTES
09-mar					
1.8 i - 1.9 TiD		apr-15	344538	**CA037**	
1.8t BioPower		set-15	344538	**CA037**	
1.9 TTiD - 2.0 t XWD		lug-15	344538	**CA037**	
2.0 t BioPower XWD - 2.0 Turbo XWD		ago-15	344538	**CA037**	
2.8 Turbo V6		mag-15	344538	**CA037**	
2.8 Turbo V6 XWD		08-nov	344538	**CA037**	
9-3 Cabriolet					
1.8 t BioPower - 1.9 TTiD - 2.0 t BioPower		lug-15	344538	**CA037**	
1.9 TiD - 2.8 Turbo V6		giu-15	344538	**CA037**	
9-3 Station wagon					
1.9 TTiD - 2.0 t BioPower - 2.0 t BioPower XWD - 2.0 t XWD		lug-15	344538	**CA037**	
2.8 Turbo V6 XWD		08-nov	344538	**CA037**	

SEAT

MODELLO MODEL	DIMENSIONI DIMENSIONS	ANNO YEAR	RIF ORIGINALE ORIGINAL REF	RIF CORAM CORAM REF	NOTE NOTES
ALAHAMBRA					
1.8 T 20V		97->	1J0412249	**CA016**	FRONT
1.8 T 20V		97-10	1102592	**CA020**	
1.9 TDI		96-00	1J0412249	**CA016**	FRONT
1.9 TDI		96-10	1102592	**CA020**	
1.9 TDI 4motion		01->	1J0412249	**CA016**	FRONT
1.9 TDI 4motion		00-10	1102592	**CA020**	
2.0 i		96->	1J0412249	**CA016**	FRONT
2.0 i		96-10	1102592	**CA020**	
2.0 TDI		05-ott	1102592	**CA020**	
2.8 V6		00->	1J0412249	**CA016**	FRONT
2.8 V6 - 2.8 V6 4motion		00-10	1102592	**CA020**	
2.8 V6 4motion		01->	1J0412249	**CA016**	FRONT
AROSA					
1.0 - 1.4		97-04	1102592	**CA020**	FRONT
1.4 16V - 1.4 TDI		00->	1J0412249	**CA016**	FRONT
1.4 16V - 1.4 TDI		00-04	1102592	**CA020**	FRONT
1.7 SDI		97->	1J0412249	**CA016**	FRONT
1.7 SDI		97-04	1102592	**CA020**	

follow SEAT

MODELLO MODEL	DIMENSIONI DIMENSIONS	ANNO YEAR	RIF ORIGINALE ORIGINAL REF	RIF CORAM CORAM REF	NOTE NOTES
CORDOBA					
1.0 i		96-99	1J0412249	**CA016**	FRONT
1.0 i		96-99	1J0412249	**CA020**	
1.4 i		94-99	1J0412249	**CA016**	FRONT
1.4 i		94-99	SE021156011A	**CA017**	FRONT
1.4 i		94-99	1J0412249	**CA020**	
1.4 i 16V		96-99	1J0412249	**CA016**	FRONT
1.4 i 16V		96-99	1J0412249	**CA020**	
1.6 i -1.8 i		93-99	1J0412249	**CA016**	FRONT
1.6 i -1.8 i		93-99	SE021156011A	**CA017**	FRONT
1.6 i -1.8 i		93-99	1J0412249	**CA020**	
1.8 i 16V		93-96	SE021156011A	**CA017**	FRONT
1.8 i 16V		93-96	1J0412249	**CA020**	
1.9 D		96	1J0412249	**CA020**	
1.9 D - 1.9 TD		93-96	1J0412249	**CA016**	FRONT
1.9 D - 1.9 TD		93-96	SE021156011A	**CA017**	FRONT
1.9 SDI		96-99	1J0412249	**CA016**	FRONT
1.9 TD		93-96	1J0412249	**CA020**	
1.9 TDI		96-99	1J0412249	**CA016**	FRONT
1.9 TDI - 1.9 SDI		96-99	1J0412249	**CA020**	
2.0 i		93-99	1J0412249	**CA016**	FRONT
2.0 i		93-99	SE021156011A	**CA017**	FRONT
2.0 i		93-99	1J0412249	**CA020**	
2.0 i 16V		96-99	1J0412249	**CA016**	FRONT
2.0 i 16V		96-99	1J0412249	**CA020**	
CORDOBA Vario					
1.4 i		96-99	1J0412249	**CA016**	FRONT
1.4 i		96-99	357412249	**CA020**	
1.6		99-02	357412249	**CA020**	
1.6 i		96-99	1J0412249	**CA016**	FRONT
1.6 i		96-88	357412249	**CA020**	
1.7 SDI		97-99	1J0412249	**CA016**	FRONT
1.9 SDI		96-99	1J0412249	**CA016**	FRONT
1.9 SDI		96-99	357412249	**CA020**	
1.9 TDI		96-99	1J0412249	**CA016**	FRONT
1.9 TDI		96-02	357412249	**CA020**	
IBIZA I (021A)					
1.5		84-93	4400895	**CA015**	FRONT
1.7 D		84-93	4400895	**CA015**	FRONT

follow SEAT

MODELLO MODEL	DIMENSIONI DIMENSIONS	ANNO YEAR	RIF ORIGINALE ORIGINAL REF	RIF CORAM CORAM REF	NOTE NOTES
IBIZA II					
1.0		93-96	SE021156011A	**CA017**	FRONT
1.0		93-96	357412249	**CA020**	
1.0 i		96-99	1J0412249	**CA016**	FRONT
1.0 i		96-99	357412249	**CA020**	
1.3 i - 1.4 i		93-99	357412249	**CA020**	
1.3 i - 1.4 i - 1.6 i - 1.8 i		93-99	1J0412249	**CA016**	FRONT
1.3 i - 1.4 i - 1.6 i - 1.8 i		93-99	SE021156011A	**CA017**	FRONT
1.4 i 16V		66-99	1J0412249	**CA016**	FRONT
1.4 i 16V		97-99	357412249	**CA020**	
1.6 i - 1.8 i - 1.8 i 16V		93-99	357412249	**CA020**	
1.8 i 16V		93-96	1J0412249	**CA016**	FRONT
1.8 i 16V		93-96	SE021156011A	**CA017**	FRONT
1.8 i 16V - 1.9 D - 1.9 TD		93-96	357412249	**CA020**	
1.9 D		93-96	1J0412249	**CA016**	FRONT
1.9 D		94-96	SE021156011A	**CA017**	FRONT
1.9 SDI		96-99	1J0412249	**CA016**	FRONT
1.9 SDI - 1.9 TDI		96-99	357412249	**CA020**	
1.9 TD		93-96	1J0412249	**CA016**	FRONT
1.9 TDI		96-99	1J0412249	**CA016**	FRONT
2.0 i		93-99	1J0412249	**CA016**	FRONT
2.0 i		93-99	SE021156011A	**CA017**	FRONT
2.0 i		93-99	357412249	**CA020**	
2.0 i 16V		96-99	1J0412249	**CA016**	FRONT
2.0 i 16V		96-99	357412249	**CA020**	
IBIZA III					
1.9 SDI -1.9 TDI		99-02	357412249	**CA020**	
IBIZA V					
1.2 TDI - 1.2 TSI		10->	357412249	**CA020**	
1.4 - 1.4 TDI - 1.6		08->	357412249	**CA020**	
1.4 TSI - 1.6 TDI		09->	357412249	**CA020**	
1.6 LPG		11->	357412249	**CA020**	
1.9 TDI		08->	357412249	**CA020**	
2.0 TDI		10->	357412249	**CA020**	

follow SEAT

MODELLO MODEL	DIMENSIONI DIMENSIONS	ANNO YEAR	RIF ORIGINALE ORIGINAL REF	RIF CORAM CORAM REF	NOTE NOTES
IBIZA V SPORTCOUPE					
1.2 - 1.4 - 1.4 TDI - 1.6		08->	357412249	**CA020**	
1.2 TDI - 1.2 TSI		10->	357412249	**CA020**	
1.4 TSI - 1.6 TDI		09->	357412249	**CA020**	
1.6 LPG		11->	357412249	**CA020**	
1.9 TDI		08->	357412249	**CA020**	
2.0 TDI		10->	357412249	**CA020**	
INCA					
1.4 16V		00-03	6R0412249	**CA020**	
1.4 i		95->	1J0412249	**CA016**	FRONT
1.4 i		95-03	6R0412249	**CA020**	
1.6 i		95-98	1J0412249	**CA016**	FRONT
1.6 i		95-00	6R0412249	**CA020**	
1.7 D		96->	1J0412249	**CA016**	FRONT
1.7 D		96-03	6R0412249	**CA020**	
1.9 D - 1.9 SDI		95->	1J0412249	**CA016**	FRONT
1.9 D - 1.9 SDI		95->	6R0412249	**CA020**	FRONT
1.9 TDI		96->	1J0412249	**CA016**	FRONT
LEON					
1.4 16V - 1.6		99-06	6R0412249	**CA020**	
1.6		99->	1J0412249	**CA016**	FRONT
1.6 16V		00->	1J0412249	**CA016**	FRONT
1.6 16V		00-06	6R0412249	**CA020**	
1.8 20V		99->	1J0412249	**CA016**	FRONT
1.8 20V - 1.8 20V T - 1.8 20V T4		99-06	6R0412249	**CA020**	
1.8 20V T		99->	1J0412249	**CA016**	FRONT
1.8 20V T 4		99->	1J0412249	**CA016**	FRONT
1.8 SDI		99->	1J0412249	**CA016**	FRONT
1.8 T Cupra R		02->	1J0412249	**CA016**	FRONT
1.8 T Cupra R		02-giu	6R0412249	**CA020**	
1.9 SDI		99-06	6R0412249	**CA020**	
1.9 TDI		99->	1J0412249	**CA016**	FRONT
1.9 TDI		01->	1J0412249	**CA016**	FRONT
1.9 TDI		99-06	6R0412249	**CA020**	
1.9 TDI Syncro		02->	1J0412249	**CA016**	FRONT
1.9 TDI Syncro		02-giu	6R0412249	**CA020**	
2.8 Cupra 4		01->	1J0412249	**CA016**	FRONT
2.8 Cupra 4		01-giu	6R0412249	**CA020**	

follow SEAT

MODELLO MODEL	DIMENSIONI DIMENSIONS	ANNO YEAR	RIF ORIGINALE ORIGINAL REF	RIF CORAM CORAM REF	NOTE NOTES
MALAGA (023A)					
1.2 i		89-93	4400895	**CA015**	FRONT
1.5		85-93	4400895	**CA015**	FRONT
1.7 D		85-93	4400895	**CA015**	FRONT
MARBELLA (28)					
0.8		86-93	4400895	**CA015**	FRONT
0.9		87-93	4400895	**CA015**	FRONT
RONDA (022A)					
1.2		83-86	4400895	**CA015**	FRONT
1.4		82-88	4400895	**CA015**	FRONT
1.5		84-86	4400895	**CA015**	FRONT
1.6		83-85	4400895	**CA015**	FRONT
1.7 Diesel		82-86	4400895	**CA015**	FRONT
TOLEDO I					
1.6 i		91-99	SE021156011A	**CA017**	FRONT
1.6 i - 1.8 i		93-99	6R0412249	**CA020**	
1.8 16V		91-99	1J0412249	**CA016**	FRONT
1.8 16V		91-99	SE021156011A	**CA017**	FRONT
1.8 i		91-96	1J0412249	**CA016**	FRONT
1.8 i		91-96	SE021156011A	**CA017**	FRONT
1.9 D - 1.9 TD		91-99	1J0412249	**CA016**	FRONT
1.9 D - 1.9 TD		91-99	SE021156011A	**CA017**	FRONT
1.9 D - 1.9 TD		91-99	6R0412249	**CA020**	
1.9 SDI		95-99	1J0412249	**CA016**	FRONT
1.9 TDI		95-99	1J0412249	**CA016**	FRONT
1.9 TDI		95-99	6R0412249	**CA020**	
2.0 i		91-99	6R0412249	**CA020**	
2.0 i - 2.0 i 16V		91-99	1J0412249	**CA016**	FRONT
2.0 i - 2.0 i 16V		91-99	SE021156011A	**CA017**	FRONT
2.0 i 16V		93-99	1J0412249	**CA016**	FRONT
2.0 i 16V		93-99	6R0412249	**CA020**	

follow SEAT

MODELLO MODEL	DIMENSIONI DIMENSIONS	ANNO YEAR	RIF ORIGINALE ORIGINAL REF	RIF CORAM CORAM REF	NOTE NOTES
TOLEDO II					
1.4 16V		99-06	6R0412249	**CA020**	
1.6		99-00	1J0412249	**CA016**	FRONT
1.6		99-00	6R0412249	**CA020**	
1.6 16V		00->	1J0412249	**CA016**	FRONT
1.6 16V		00-06	6R0412249	**CA020**	
1.8 20V		99->	1J0412249	**CA016**	FRONT
1.8 20V		99-06	6R0412249	**CA020**	
1.8 20VT		01-giu	6R0412249	**CA020**	
1.9 SDI		99-04	6R0412249	**CA020**	
1.9 TDI		99->	1J0412249	**CA016**	FRONT
1.9 TDI		99-06	6R0412249	**CA020**	
2.3 V5		99-01	1J0412249	**CA016**	FRONT
2.3 V5		99-01	6R0412249	**CA020**	
2.3 V5 20V		01-giu	6R0412249	**CA020**	

SKODA

MODELLO MODEL	DIMENSIONI DIMENSIONS	ANNO YEAR	RIF ORIGINALE ORIGINAL REF	RIF CORAM CORAM REF	NOTE NOTES
FABIA					
1.2		06->	6R0412249	**CA020**	
1.2 TSI - 1.4 TSI		10->	6R0412249	**CA020**	
1.4 - 1.4 TDI - 1.6		07->	6R0412249	**CA020**	
1.6 TDI		10->	6R0412249	**CA020**	
1.9 TDI		07->	6R0412249	**CA020**	
FABIA Combi					
1.2		07->	6R0412249	**CA020**	
1.2 TSI - 1.4 TSI		10->	6R0412249	**CA020**	
1.4 - 1.4 TDI - 1.6		07->	6R0412249	**CA020**	
1.6 TDI		10->	6R0412249	**CA020**	
1.9 TDI		07->	6R0412249	**CA020**	

follow SKODA

MODELLO MODEL	DIMENSIONI DIMENSIONS	ANNO YEAR	RIF ORIGINALE ORIGINAL REF	RIF CORAM CORAM REF	NOTE NOTES
OCTAVIA					
1.4		99->	6R0412249	**CA020**	
1.4 16V		00->	357412249	**CA016**	FRONT
1.4 16V		00->	6R0412249	**CA020**	
1.6		00->	357412249	**CA016**	FRONT
1.6		96-00	357412249	**CA016**	FRONT
1.6 - 1.8		96->	6R0412249	**CA020**	
1.8		96->	357412249	**CA016**	FRONT
1.8 T		97->	357412249	**CA016**	FRONT
1.8 T		97->	6R0412249	**CA020**	
1.8 T 4x4		01->	357412249	**CA016**	FRONT
1.8 T 4x4		01->	6R0412249	**CA020**	
1.9 SDI		97->	357412249	**CA016**	FRONT
1.9 SDI		97->	6R0412249	**CA020**	
1.9 TDI		96->	357412249	**CA016**	FRONT
1.9 TDI		96->	6R0412249	**CA020**	
2.0		99->	357412249	**CA016**	FRONT
2.0		99->	6R0412249	**CA020**	
RS 1.8 T		01->	357412249	**CA016**	FRONT
RS 1.8 T		01->	6R0412249	**CA020**	
OCTAVIA Combi					
1.4 16V		00->	357412249	**CA016**	FRONT
1.4 16V		00->	6R0412249	**CA020**	
1.6		98->	357412249	**CA016**	FRONT
1.6		98->	6R0412249	**CA020**	
1.8 20V		98->	357412249	**CA016**	FRONT
1.8 20V - 1.8 T		98->	6R0412249	**CA020**	
1.8 T		98->	357412249	**CA016**	FRONT
1.8 T 4x4		01->	357412249	**CA016**	FRONT
1.8 T 4x4		01->	6R0412249	**CA020**	
1.9 SDI		98->	357412249	**CA016**	FRONT
1.9 SDI		98->	6R0412249	**CA020**	
1.9 TDI		98->	357412249	**CA016**	FRONT
1.9 TDI 4x4		00->	357412249	**CA016**	FRONT
1.9 TDI 4x4		99->	6R0412249	**CA020**	
2.0		99->	357412249	**CA016**	FRONT
2.0		99->	6R0412249	**CA020**	
2.0 4x4		01->	357412249	**CA016**	FRONT
2.0 4x4		00->	6R0412249	**CA020**	
RS 1.8 T		02->	357412249	**CA016**	FRONT
RS 1.8 T		02->	6R0412249	**CA020**	

follow SKODA

MODELLO MODEL	DIMENSIONI DIMENSIONS	ANNO YEAR	RIF ORIGINALE ORIGINAL REF	RIF CORAM CORAM REF	NOTE NOTES
ROOMSTER					
1.2 TDI - 1.2 TSI		10->	6R0412249	**CA020**	
1.4 - 1.4 TDI - 1.6		06->	6R0412249	**CA020**	
1.6 TDI		10->	6R0412249	**CA020**	
1.9 TDI		06-ott	6R0412249	**CA020**	
ROOMSTER Praktik					
1.2 TDI - 1.2 TSI		10->	6R0412249	**CA020**	
1.4		07->	6R0412249	**CA020**	
1.4 TDI		07-ott	6R0412249	**CA020**	

SMART

MODELLO MODEL	DIMENSIONI DIMENSIONS	ANNO YEAR	RIF ORIGINALE ORIGINAL REF	RIF CORAM CORAM REF	NOTE NOTES
CABRIO					
0.6		00-04	4503300051	**CA020**	
0.7		03-apr	4503300051	**CA020**	
0.8 CDI		01-apr	4503300051	**CA020**	
CITY-COUPE					
0.6		98-04	4503300051	**CA020**	
0.7		03-apr	4503300051	**CA020**	
0.8 CDI		99-04	4503300051	**CA020**	
FORTWO Cabriolet					
0.9 - 1.0		15->	4533210084	**CA035**	
0.9 Brabus		16->	4533210084	**CA035**	
1.0 Brabus		08->	4503300051	**CA020**	
1.0 Turbo		07->	4503300051	**CA020**	
electric drive		10->	4503300051	**CA020**	
FORTWO Coupè					
0.8 CDI - 1.0		07->	4503300051	**CA020**	
0.9 - 1.0		14->	4533210084	**CA035**	
0.9 Brabus		16->	4533210084	**CA035**	
1.0 Brabus		08->	4503300051	**CA020**	
1.0 Turbo		07->	4503300051	**CA020**	
1.0 Turbo Brabus		10->	4503300051	**CA020**	
electric drive		10->	4503300051	**CA020**	
electric drive		17->	4533210084	**CA035**	

TOYOTA					
MODELLO MODEL	**DIMENSIONI DIMENSIONS**	**ANNO YEAR**	**RIF ORIGINALE ORIGINAL REF**	**RIF CORAM CORAM REF**	**NOTE NOTES**
AYGO					
1.0 - 1.0 GPL		mag-14	5035.57	**CA032**	
1.4 Hdi		05-ott	5035.57	**CA032**	
YARIS					
1.0		10->	5035.57	**CA032**	
1.0 VVT-i		05-nov	5035.57	**CA032**	
1.3 - 1.4 D		11->	5035.57	**CA032**	
1.3 VVT-i		05-ott	5035.57	**CA032**	
1.33 VVT-i		08-nov	5035.57	**CA032**	
1.4 D-4D		05-dic	5035.57	**CA032**	
1.5		17->	5035.57	**CA032**	
1.5 Hybrid		12->	5035.57	**CA032**	
1.8 VVT-i		07-nov	5035.57	**CA032**	

VOLKSWAGEN

MODELLO MODEL	DIMENSIONI DIMENSIONS	ANNO YEAR	RIF ORIGINALE ORIGINAL REF	RIF CORAM CORAM REF	NOTE NOTES
BORA					
1.4 16V		00-05	1J0412249	**CA020**	
1.6		98->	357412249	**CA016**	FRONT
1.6		98-05	6R0412249	**CA020**	
1.6 16V		00->	357412249	**CA016**	FRONT
1.6 16V		00-05	6R0412249	**CA020**	
1.6 FSI		02->	357412249	**CA016**	FRONT
1.6 FSI		02-mag	6R0412249	**CA020**	
1.8		98->	357412249	**CA016**	FRONT
1.8 4motion		99->	357412249	**CA016**	FRONT
1.8 4motion		99-05	1J0412249	**CA020**	
1.8 T		00->	357412249	**CA016**	FRONT
1.8 T		00-05	1J0412249	**CA020**	
1.9 SDI		98->	357412249	**CA016**	FRONT
1.9 SDI		98-05	1J0412249	**CA020**	
1.9 TDI		98->	357412249	**CA016**	FRONT
1.9 TDI		98-05	1J0412249	**CA020**	
1.9 TDI 4motion		99->	357412249	**CA016**	FRONT
1.9 TDI 4motion		99-05	1J0412249	**CA020**	
2.0		98->	357412249	**CA016**	FRONT
2.0		98-05	6R0412249	**CA020**	
2.0 4motion		00->	357412249	**CA016**	FRONT
2.0 4motion		00-05	6R0412249	**CA020**	
2.3 V5		98->	357412249	**CA016**	FRONT
2.3 V5		98-05	6R0412249	**CA020**	
2.3 V5 4motion		98->	357412249	**CA016**	FRONT
2.3 V5 4motion		98-05	6R0412249	**CA020**	
2.8 V6 4motion		99->	357412249	**CA016**	FRONT
2.8 V6 4motion		99-05	6R0412249	**CA020**	

follow VOLKSWAGEN

MODELLO MODEL	DIMENSIONI DIMENSIONS	ANNO YEAR	RIF ORIGINALE ORIGINAL REF	RIF CORAM CORAM REF	NOTE NOTES
BORA Station Wagon					
1.4 16V		01-mag	6R0412249	**CA020**	
1.6		98->	357412249	**CA016**	FRONT
1.6		99-05	6R0412249	**CA020**	
1.6 16V		00->	357412249	**CA016**	FRONT
1.6 16V		00-05	1J0412249	**CA020**	
1.6 FSI		02->	357412249	**CA016**	FRONT
1.6 FSI		02-mag	1J0412249	**CA020**	
1.8		00->	357412249	**CA016**	FRONT
1.8 4motion		99->	357412249	**CA016**	FRONT
1.8 4motion		99-05	1J0412249	**CA020**	
1.8 T		02->	357412249	**CA016**	FRONT
1.8 T		00-05	1J0412249	**CA020**	
1.9 TDI - 1.9 TDI 4motion		99->	357412249	**CA016**	FRONT
1.9 TDI - 1.9 TDI 4motion		99-05	1J0412249	**CA020**	
2.0		99->	357412249	**CA016**	FRONT
2.0		99-05	1J0412249	**CA020**	
2.0 4motion		00->	357412249	**CA016**	FRONT
2.0 4motion		00-05	6R0412249	**CA020**	
2.3 V5		99->	357412249	**CA016**	FRONT
2.3 V5		99-05	1J0412249	**CA020**	
2.3 V5 4motion		99->	357412249	**CA016**	FRONT
2.3 V5 4motion - 2.8 V6 4motion		99-05	6R0412249	**CA020**	
2.8 V6 4motion		99->	357412249	**CA016**	FRONT
CADDY I					
1.5		82-83	021156017A	**CA017**	FRONT
1.6		83-92	021156017A	**CA017**	FRONT
1.6 D		82-92	021156017A	**CA017**	FRONT
1.8		85-92	021156017A	**CA017**	FRONT
CADDY II Furgonato					
1.4		00-04	1J0412249	**CA020**	
1.9 D		95-04	357412249	**CA016**	FRONT
1.9 D		95-04	1J0412249	**CA020**	
1.9 SDI		95-04	357412249	**CA016**	FRONT
1.9 SDI		95-04	1J0412249	**CA020**	
1.9 TDI		96-04	357412249	**CA016**	FRONT
1.9 TDI		96-04	1J0412249	**CA020**	
60 1.4		95-04	357412249	**CA016**	FRONT
60 1.4		95-04	1J0412249	**CA020**	
75 1.6		95-00	357412249	**CA016**	FRONT
75 1.6		95-00	1J0412249	**CA020**	

follow VOLKSWAGEN

MODELLO MODEL	DIMENSIONI DIMENSIONS	ANNO YEAR	RIF ORIGINALE ORIGINAL REF	RIF CORAM CORAM REF	NOTE NOTES
CADDY II Pick-up					
1.6		96-00	1J0412249	**CA020**	
1.9 D		96-00	357412249	**CA016**	FRONT
1.9 D		96-00	1J0412249	**CA020**	
CADDY II Station Wagon					
1.4 16V		00-04	1J0412249	**CA020**	
1.6		95-00	1J0412249	**CA020**	
1.9 D - 1.9 SDI		95-04	1J0412249	**CA020**	
1.9 TDI		96-04	1J0412249	**CA020**	
CORRADO					
1.8 G60		88-93	021156017A	**CA017**	FRONT
2.0 i		93-95	021156017A	**CA017**	FRONT
2.0 i		93-95	1J0412249	**CA020**	
2.0 i 16V		91-95	021156017A	**CA017**	FRONT
2.0 i 16V		91-95	1J0412249	**CA020**	
2.9 VR6		91-95	357412249	**CA016**	FRONT
2.9 VR6		94-95	1J0412249	**CA020**	
FOX					
1.2		05->	1J0412249	**CA020**	
1.4		05->	357412249	**CA016**	FRONT
1.4		05->	1J0412249	**CA020**	
1.4 TDI		05->	357412249	**CA016**	FRONT
1.4 TDI		05->	1J0412249	**CA020**	
GOLF I (17)					
1.1		81-83	021156017A	**CA017**	FRONT
1.3		79-83	021156017A	**CA017**	FRONT
1.5		74-83	021156017A	**CA017**	FRONT
1.5 D		76-80	021156017A	**CA017**	FRONT
1.6		75-84	021156017A	**CA017**	FRONT
1.6 D		80-83	021156017A	**CA017**	FRONT
1.6 GTI		76-82	021156017A	**CA017**	FRONT
1.6 TD		82-83	021156017A	**CA017**	FRONT
1.8 GTI		82-83	021156017A	**CA017**	FRONT

follow VOLKSWAGEN

MODELLO MODEL	DIMENSIONI DIMENSIONS	ANNO YEAR	RIF ORIGINALE ORIGINAL REF	RIF CORAM CORAM REF	NOTE NOTES
GOLF I Cabriolet (155)					
1.6		79-92	021156017A	**CA017**	FRONT
1.8		82-93	021156017A	**CA017**	FRONT
GOLF II (19E, 1G1)					
1.3		83-87	021156017A	**CA017**	FRONT
1.3 Cat.		86-92	021156017A	**CA017**	FRONT
1.6		81-92	021156017A	**CA017**	FRONT
1.6 D		83-91	021156017A	**CA017**	FRONT
1.6 TD		83-91	021156017A	**CA017**	FRONT
1.8		84-91	021156017A	**CA017**	FRONT
1.8 GTI		83-91	021156017A	**CA017**	FRONT
1.8 GTI 16V		86-91	021156017A	**CA017**	FRONT
1.8 GTI Cat.		87-91	021156017A	**CA017**	FRONT
1.8 GTI G60		90-91	021156017A	**CA017**	FRONT
1.8 GTI G60 Syncro		88-91	021156017A	**CA017**	FRONT
1.8 i Cat.		87-91	021156017A	**CA017**	FRONT
1.8 i Syncro Cat.		87-91	021156017A	**CA017**	FRONT
1.8 Syncro		86-91	021156017A	**CA017**	FRONT

follow VOLKSWAGEN

MODELLO MODEL	DIMENSIONI DIMENSIONS	ANNO YEAR	RIF ORIGINALE ORIGINAL REF	RIF CORAM CORAM REF	NOTE NOTES
GOLF III					
1.4		91-97	357412249	**CA016**	FRONT
1.4		91-97	021156017A	**CA017**	FRONT
1.4		91-97	1J0412249	**CA020**	
1.6		92-97	357412249	**CA016**	FRONT
1.6		92-97	021156017A	**CA017**	FRONT
1.6		92-97	1J0412249	**CA020**	
1.8		91-97	357412249	**CA016**	FRONT
1.8		91-97	021156017A	**CA017**	FRONT
1.8		91-97	1J0412249	**CA020**	
1.8 Syncro (1HX1)		93-97	357412249	**CA016**	FRONT
1.8 Syncro (1HX1)		93-97	021156017A	**CA017**	FRONT
1.8 Syncro (1HX1)		93-97	1J0412249	**CA020**	
1.9 D - 1.9 TD,GTD		91-97	357412249	**CA016**	FRONT
1.9 D - 1.9 TD,GTD		91-97	021156017A	**CA017**	FRONT
1.9 D - 1.9 TD,GTD		91-97	1J0412249	**CA020**	
1.9 SDI		97-97	357412249	**CA016**	FRONT
1.9 SDI		95-97	1J0412249	**CA020**	
1.9 TDI		93-97	357412249	**CA016**	FRONT
1.9 TDI		93-97	021156017A	**CA017**	FRONT
1.9 TDI		93-97	1J0412249	**CA020**	
1.9 TDI Syncro (1HX1)		95-97	357412249	**CA016**	FRONT
1.9 TDI Syncro (1HX1)		95-97	1J0412249	**CA020**	
2.0		91-97	357412249	**CA016**	FRONT
2.0		91-97	021156017A	**CA017**	FRONT
2.0		91-97	1J0412249	**CA020**	
2.0 GTI 16V		92-97	021156017A	**CA017**	FRONT
2.0 GTI 16V		92-97	1J0412249	**CA020**	
2.0 GTI 16V		92-97	357412249	**CA016**	FRONT
2.0 Syncro (1HX1)		95-97	357412249	**CA016**	FRONT
2.8 VR6		92-97	357412249	**CA016**	FRONT
2.8 VR6		92-97	1J0412249	**CA020**	
2.8 VR6 Syncro (1HX1)		94-97	357412249	**CA016**	FRONT
2.9 VR6 Syncro (1HX1)		94-97	357412249	**CA016**	FRONT
2.9 VR6 Syncro (1HX1)		94-97	1J0412249	**CA020**	
Citystromer		94-97	357412249	**CA016**	FRONT

follow VOLKSWAGEN

MODELLO MODEL	DIMENSIONI DIMENSIONS	ANNO YEAR	RIF ORIGINALE ORIGINAL REF	RIF CORAM CORAM REF	NOTE NOTES
GOLF III Cabriolet					
1.6		94-98	357412249	**CA016**	FRONT
1.6		94-98	1J0412249	**CA020**	
1.8		93-98	357412249	**CA016**	FRONT
1.8		93-98	1J0412249	**CA020**	
1.9 TDI		95-98	357412249	**CA016**	FRONT
1.9 TDI		95-98	1J0412249	**CA020**	
2.0		93-98	357412249	**CA016**	FRONT
2.0		93-98	1J0412249	**CA020**	
GOLF III Variant					
1.4		93-99	357412249	**CA016**	FRONT
1.4		93-99	1J0412249	**CA020**	
1.6		93-97	021156017A	**CA017**	FRONT
1.6		94-99	357412249	**CA016**	FRONT
1.6		93-99	1J0412249	**CA020**	
1.8		93-88	021156017A	**CA017**	FRONT
1.8		93-99	357412249	**CA016**	FRONT
1.8		93-99	1J0412249	**CA020**	
1.8 Syncro		94-99	357412249	**CA016**	FRONT
1.8 Syncro		94-99	1J0412249	**CA020**	
1.9 D - 1.9 TD - 1.9 TDI		93-99	021156017A	**CA017**	FRONT
1.9 D - 1.9 TD - 1.9 TDI		93-99	357412249	**CA016**	FRONT
1.9 D - 1.9 TD - 1.9 TDI		93-99	1J0412249	**CA020**	
1.9 SDI		97-99	357412249	**CA016**	FRONT
1.9 SDI		95-99	1J0412249	**CA020**	
1.9 TDI Syncro		95-99	357412249	**CA016**	FRONT
1.9 TDI Syncro		95-99	1J0412249	**CA020**	
2.0		93-99	021156017A	**CA017**	FRONT
2.0		93-99	357412249	**CA016**	FRONT
2.0		93-99	1J0412249	**CA020**	
2.0 Syncro		95-99	357412249	**CA016**	FRONT
2.0 Syncro		95-99	1J0412249	**CA020**	
2.9 VR6 - 2.9 VR6 Syncro		94-99	357412249	**CA016**	FRONT
2.9 VR6 - 2.9 VR6 Syncro		94-99	1J0412249	**CA020**	

follow VOLKSWAGEN

MODELLO MODEL	DIMENSIONI DIMENSIONS	ANNO YEAR	RIF ORIGINALE ORIGINAL REF	RIF CORAM CORAM REF	NOTE NOTES
GOLF IV					
1.6		97->	357412249	**CA016**	FRONT
1.6		97-05	1J0412249	**CA020**	
1.6 16V		00->	357412249	**CA016**	FRONT
1.6 16V		00-05	1J0412249	**CA020**	
1.6 FSI		02->	357412249	**CA016**	FRONT
1.6 FSI		02-mag	1J0412249	**CA020**	
1.8		97->	357412249	**CA016**	FRONT
1.8		97-05	1J0412249	**CA020**	
1.8 4motion		98->	357412249	**CA016**	FRONT
1.8 4motion		95-05	1J0412249	**CA020**	
1.8 T		97->	357412249	**CA016**	FRONT
1.8 T		97-05	1J0412249	**CA020**	
1.8 T GTI		01->	357412249	**CA016**	FRONT
1.8 T GTI		01-mag	1J0412249	**CA020**	
1.9 SDI		97->	357412249	**CA016**	FRONT
1.9 SDI		97-05	1J0412249	**CA020**	
1.9 TDI		97-04	357412249	**CA016**	FRONT
1.9 TDI		97-05	1J0412249	**CA020**	
1.9 TDI 4motion		98-01	357412249	**CA016**	FRONT
1.9 TDI 4motion		98-05	1J0412249	**CA020**	
2.0		98->	357412249	**CA016**	FRONT
2.0		98-05	1J0412249	**CA020**	
2.0 4motion		00->	357412249	**CA016**	FRONT
2.0 4motion		00-05	1J0412249	**CA020**	
2.3 V5		97-00	357412249	**CA016**	FRONT
2.3 V5		97-05	1J0412249	**CA020**	
2.3 V5 4motion		98-00	357412249	**CA016**	FRONT
2.3 V5 4motion		98-05	1J0412249	**CA020**	
2.8 V6 4motion		99->	357412249	**CA016**	FRONT
2.8 V6 4motion		99-05	1J0412249	**CA020**	
3.2 R32 4motion		02->	357412249	**CA016**	FRONT
3.2 R32 4motion		02-mag	1J0412249	**CA020**	
GOLF IV Cabriolet					
1.6		98-02	1J0412249	**CA020**	
1.8		98->	357412249	**CA016**	FRONT
1.8		98-02	1J0412249	**CA020**	
1.9 TDI		98->	357412249	**CA016**	FRONT
1.9 TDI		98-02	1J0412249	**CA020**	
2.0		98->	357412249	**CA016**	FRONT
2.0		98-02	1J0412249	**CA020**	

follow VOLKSWAGEN

MODELLO MODEL	DIMENSIONI DIMENSIONS	ANNO YEAR	RIF ORIGINALE ORIGINAL REF	RIF CORAM CORAM REF	NOTE NOTES
GOLF IV Variant					
1.4 16V		99->	357412249	**CA016**	FRONT
1.4 16V		99-06	1J0412249	**CA020**	
1.6		00->	357412249	**CA016**	FRONT
1.6		99-06	1J0412249	**CA020**	
1.6 16V		00->	357412249	**CA016**	FRONT
1.6 16V		00-06	1J0412249	**CA020**	
1.6 FSI		02->	357412249	**CA016**	FRONT
1.6 FSI		02-giu	1J0412249	**CA020**	
1.8 4motion		99->	357412249	**CA016**	FRONT
1.8 4motion		99-06	1J0412249	**CA020**	
1.8 T		00->	357412249	**CA016**	FRONT
1.8 T		00-06	1J0412249	**CA020**	
1.9 SDI		99->	357412249	**CA016**	FRONT
1.9 SDI		99-06	1J0412249	**CA020**	
1.9 TDI - 1.9 TDI 4motion		99-01	357412249	**CA016**	FRONT
1.9 TDI - 1.9 TDI 4motion		99-06	1J0412249	**CA020**	
2.0		99->	357412249	**CA016**	FRONT
2.0		99-06	1J0412249	**CA020**	
2.0 4motion		00->	357412249	**CA016**	FRONT
2.0 4motion		00-06	1J0412249	**CA020**	
2.0 Bi-Fuel		02->	357412249	**CA016**	FRONT
2.0 Bi-Fuel		02-giu	1J0412249	**CA020**	
2.3 V5 - 2.3 V5 4motion		99->	357412249	**CA016**	FRONT
2.3 V5 - 2.3 V5 4motion		99-06	1J0412249	**CA020**	FRONT
2.8 V6 4motion		99->	357412249	**CA016**	FRONT
2.8 V6 4motion		99-06	1J0412249	**CA020**	
JETTA I (16)					
1.3		79-84	021156017A	**CA017**	FRONT
1.5		78-84	021156017A	**CA017**	FRONT
1.5 D		78-80	021156017A	**CA017**	FRONT
1.6		78-84	021156017A	**CA017**	FRONT
1.6 D		80-84	021156017A	**CA017**	FRONT
1.6 GLI		78-82	021156017A	**CA017**	FRONT
1.6 TD		82-84	021156017A	**CA017**	FRONT
1.8		82-84	021156017A	**CA017**	FRONT

follow VOLKSWAGEN

MODELLO MODEL	DIMENSIONI DIMENSIONS	ANNO YEAR	RIF ORIGINALE ORIGINAL REF	RIF CORAM CORAM REF	NOTE NOTES
JETTA II (19E,1G2)					
1.3 Cat.		87-91	021156017A	**CA017**	FRONT
1.6		84-92	021156017A	**CA017**	FRONT
1.6 D		84-91	021156017A	**CA017**	FRONT
1.6 TD		84-91	021156017A	**CA017**	FRONT
1.8		84-91	021156017A	**CA017**	FRONT
1.8 16V		86-91	021156017A	**CA017**	FRONT
1.8 Cat.		87-91	021156017A	**CA017**	FRONT
1.8 Syncro		87-88	021156017A	**CA017**	FRONT
KAEFER Cabriolet (15) 1302,1303					
1.6		70-79	021156017A	**CA017**	FRONT
LUPO					
1.0		98->	357412249	**CA016**	FRONT
1.0		98-05	1J0412249	**CA020**	
1.2 TDI 3L		99->	357412249	**CA016**	FRONT
1.2 TDI 3L		99-05	1J0412249	**CA020**	
1.4		00->	357412249	**CA016**	FRONT
1.4		00-05	1J0412249	**CA020**	
1.4 16V		98->	357412249	**CA016**	FRONT
1.4 16V		98-05	1J0412249	**CA020**	
1.4 FSI		01->	357412249	**CA016**	FRONT
1.4 FSI		01-mag	1J0412249	**CA020**	
1.4 TDI		99->	357412249	**CA016**	FRONT
1.4 TDI		99-05	1J0412249	**CA020**	
1.6 GTI		00-05	1J0412249	**CA020**	
1.7 SDI		98->	357412249	**CA016**	FRONT
1.7 SDI		98-05	1J0412249	**CA020**	
MULTIVAN V					
1.9 TDI		06-set	7E0412249	**CA019**	
2.0		03->	7E0412249	**CA019**	
2.0		mar-15	7E0412249A	**CA024**	
2.0 BiTDI - 2.0 BiTDI 4motion		09->	7E0412249	**CA019**	
2.0 BiTDI - 2.0 BiTDI 4motion - 2.0 TDI - 2.0 TDI 4motion		set-15	7E0412249A	**CA024**	
2.0 TDI - 2.0 TDI 4motion		09->	7E0412249	**CA019**	
2.0 TSI - 2.0 TSI 4motion		nov-15	7E0412249A	**CA024**	
2.5 TDI		03-set	7E0412249	**CA019**	
2.5 TDI 4motion		04-set	7E0412249	**CA019**	
3.2 V6 - 3.2 V6 4motion		04-set	7E0412249	**CA019**	

follow VOLKSWAGEN

MODELLO MODEL	DIMENSIONI DIMENSIONS	ANNO YEAR	RIF ORIGINALE ORIGINAL REF	RIF CORAM CORAM REF	NOTE NOTES
NEW BEETLE					
1.4		01->	1J0412249	**CA020**	
1.6		99->	357412249	**CA016**	FRONT
1.6		99->	1J0412249	**CA020**	
1.8 T		99->	357412249	**CA016**	FRONT
1.8 T		99->	1J0412249	**CA020**	
1.9 TDI		98-01	357412249	**CA016**	FRONT
1.9 TDI		98->	1J0412249	**CA020**	
2.0		98->	357412249	**CA016**	FRONT
2.0		98->	1J0412249	**CA020**	
2.3 V5		00->	357412249	**CA016**	FRONT
2.3 V5		00->	1J0412249	**CA020**	
2.5		05->	1J0412249	**CA020**	
RSI 3.2 (1C9)		00->	357412249	**CA016**	FRONT
RSI 3.2 (1C9)		00-01	1J0412249	**CA020**	
NEW BEETLE Cabriolet					
1.4		03->	357412249	**CA016**	FRONT
1.4		03->	1J0412249	**CA020**	
1.6		03->	357412249	**CA016**	FRONT
1.6		03->	1J0412249	**CA020**	
1.8 T		04->	357412249	**CA016**	FRONT
1.8 T		03->	1J0412249	**CA020**	
1.9 TDI		03->	357412249	**CA016**	FRONT
1.9 TDI		05->	1J0412249	**CA020**	
2.0		03->	357412249	**CA016**	FRONT
2.0		02->	1J0412249	**CA020**	
2.5		05->	1J0412249	**CA020**	
PASSAT (32)					
1.5		73-75	021156017A	**CA017**	FRONT
1.5 D		77-80	021156017A	**CA017**	FRONT
1.6		75-80	021156017A	**CA017**	FRONT

follow VOLKSWAGEN

MODELLO MODEL	DIMENSIONI DIMENSIONS	ANNO YEAR	RIF ORIGINALE ORIGINAL REF	RIF CORAM CORAM REF	NOTE NOTES
PASSAT (32B)					
1.3		80-86	021156017A	**CA017**	FRONT
1.6		80-88	021156017A	**CA017**	FRONT
1.6 D		80-88	021156017A	**CA017**	FRONT
1.6 TD		82-88	021156017A	**CA017**	FRONT
1.8		83-88	021156017A	**CA017**	FRONT
1.9		81-83	021156017A	**CA017**	FRONT
2.0		83-88	021156017A	**CA017**	FRONT
2.2		85-88	021156017A	**CA017**	FRONT
PASSAT (3A2,35I)					
1.6		88-91	021156017A	**CA017**	FRONT
1.6		94-96	357412249	**CA016**	FRONT
1.6		94-96	1J0412249	**CA020**	
1.6 TD		88-93	021156017A	**CA017**	FRONT
1.6 TD		88-93	357412249	**CA016**	FRONT
1.6 TD		88-93	1J0412249	**CA020**	
1.8		88-96	021156017A	**CA017**	FRONT
1.8		88-96	357412249	**CA016**	FRONT
1.8		88-96	1J0412249	**CA020**	
1.8 16V		88-89	021156017A	**CA017**	FRONT
1.8 G60 Syncro		88-96	1J0412249	**CA020**	
1.8 G60 Syncro		88-96	357412249	**CA016**	FRONT
1.9 D		89-93	357412249	**CA016**	FRONT
1.9 D		89-93	021156017A	**CA017**	FRONT
1.9 D		89-93	1J0412249	**CA020**	
1.9 TD		91-96	021156017A	**CA017**	FRONT
1.9 TD		91-96	357412249	**CA016**	FRONT
1.9 TD		91-96	1J0412249	**CA020**	
1.9 TDI		93-96	357412249	**CA016**	FRONT
1.9 TDI		93-96	1J0412249	**CA020**	
2.0		95-96	1J0412249	**CA020**	
2.0 - 2.0 Syncro		90-96	357412249	**CA016**	FRONT
2.0 - 2.0 Syncro		90-96	021156017A	**CA017**	FRONT
2.0 16V		88-96	357412249	**CA016**	FRONT
2.0 16V		88-93	021156017A	**CA017**	FRONT
2.0 16V		88-96	1J0412249	**CA020**	
2.0 Syncro		90-96	1J0412249	**CA020**	
2.8 VR6		91-96	357412249	**CA016**	FRONT
2.8 VR6		91-96	1J0412249	**CA020**	

follow VOLKSWAGEN

MODELLO MODEL	DIMENSIONI DIMENSIONS	ANNO YEAR	RIF ORIGINALE ORIGINAL REF	RIF CORAM CORAM REF	NOTE NOTES
PASSAT Tre volumi (32B)					
1.6		85-88	021156017A	**CA017**	FRONT
1.6 TD		85-88	021156017A	**CA017**	FRONT
1.8		85-88	021156017A	**CA017**	FRONT
2.2		85-88	021156017A	**CA017**	FRONT
PASSAT Variant (32B)					
1.3		80-86	021156017A	**CA017**	FRONT
1.6		80-86	021156017A	**CA017**	FRONT
1.6 D		80-88	021156017A	**CA017**	FRONT
1.6 TD		82-88	021156017A	**CA017**	FRONT
1.8		83-88	021156017A	**CA017**	FRONT
1.8 Syncro		86-88	021156017A	**CA017**	FRONT
1.9		81-83	021156017A	**CA017**	FRONT
2.0 - 2.0 Syncro		83-88	021156017A	**CA017**	FRONT
2.2 - 2.2 Syncro		85-88	021156017A	**CA017**	FRONT
PASSAT Variant (33)					
1.5		73-75	021156017A	**CA017**	FRONT
1.5 D		77-80	021156017A	**CA017**	FRONT
1.6		75-80	021156017A	**CA017**	FRONT
1.6 D		79-80	021156017A	**CA017**	FRONT
1.6 i		78-80	021156017A	**CA017**	FRONT

follow VOLKSWAGEN

MODELLO MODEL	DIMENSIONI DIMENSIONS	ANNO YEAR	RIF ORIGINALE ORIGINAL REF	RIF CORAM CORAM REF	NOTE NOTES
PASSAT Variant (3A5,35I)					
1.6		88-95	357412249	**CA016**	FRONT
1.6		88-91	021156017A	**CA017**	FRONT
1.6		94-95	1J0412249	**CA020**	
1.6 TD		88-93	357412249	**CA016**	FRONT
1.6 TD		88-93	021156017A	**CA017**	FRONT
1.6 TD		88-93	1J0412249	**CA020**	
1.8		88-97	357412249	**CA016**	FRONT
1.8		88-97	021156017A	**CA017**	FRONT
1.8		88-97	1J0412249	**CA020**	
1.8 16V		88-89	021156017A	**CA017**	FRONT
1.8 G60 Syncro		88-97	357412249	**CA016**	FRONT
1.8 G60 Syncro		88-97	021156017A	**CA017**	FRONT
1.8 G60 Syncro		88-97	1J0412249	**CA020**	
1.9 D		89-93	357412249	**CA016**	FRONT
1.9 D		89-93	021156017A	**CA017**	FRONT
1.9 D		89-93	1J0412249	**CA020**	
1.9 TD		91-97	357412249	**CA016**	FRONT
1.9 TD		91-97	021156017A	**CA017**	FRONT
1.9 TD		91-97	1J0412249	**CA020**	
1.9 TDI		93-97	357412249	**CA016**	FRONT
1.9 TDI		93-97	1J0412249	**CA020**	
2.0 - 2.0 Syncro		90-97	357412249	**CA016**	FRONT
2.0 - 2.0 Syncro		90-97	021156017A	**CA017**	FRONT
2.0 - 2.0 Syncro		90-97	1J0412249	**CA020**	
2.0 16V		94-97	357412249	**CA016**	FRONT
2.0 16V		88-93	021156017A	**CA017**	FRONT
2.0 16V		88-97	1J0412249	**CA020**	
2.8 VR6		91-97	357412249	**CA016**	FRONT
2.8 VR6		94-97	1J0412249	**CA020**	
2.9 VR6 Syncro		94-97	357412249	**CA016**	FRONT
2.9 VR6 Syncro		94-97	1J0412249	**CA020**	

follow VOLKSWAGEN

MODELLO MODEL	DIMENSIONI DIMENSIONS	ANNO YEAR	RIF ORIGINALE ORIGINAL REF	RIF CORAM CORAM REF	NOTE NOTES
POLO					
1.2 - 1.2 TDI - 1.2 TSI		09->	6R0412249	**CA020**	
1.4		99->	6R0412249	**CA020**	
1.4 16 V - 1.4 TDI		99-01	6R0412249	**CA020**	
1.4 BiFuel		10-nov	6R0412249	**CA020**	
1.4 GTI		10->	6R0412249	**CA020**	
1.6 16V GTI		99-01	6R0412249	**CA020**	
1.6 BiFuel		11->	6R0412249	**CA020**	
1.6 TDI		09->	6R0412249	**CA020**	
1.7 SDI		97-01	1J0412249	**CA020**	
1.9 D - 1.9 SDI		99-01	6R0412249	**CA020**	
100 1.4 16V		96-99	357412249	**CA016**	FRONT
100 1.4 16V		96-99	6R0412249	**CA020**	
120 1.6 16V GTI		98-99	357412249	**CA016**	FRONT
120 1.6 16V GTI		98-99	6R0412249	**CA020**	
45 - 50 1.0		94-99	357412249	**CA016**	FRONT
45 - 50 1.0		94-96	6R0412249	**CA020**	
50 1.0		96-99	6R0412249	**CA020**	
55 1.3		94-95	357412249	**CA016**	FRONT
55 1.3		94-95	6R0412249	**CA020**	
55 1.4		95-99	6R0412249	**CA020**	
55 - 60 1.4		95-99	357412249	**CA016**	FRONT
60 1.4		95-99	6R0412249	**CA020**	
60 1.7 SDI		97-99	357412249	**CA016**	FRONT
60 1.7 SDI		97-99	6R0412249	**CA020**	
64 1.9 D		94-99	357412249	**CA016**	FRONT
64 1.9 D		94-99	6R0412249	**CA020**	
64 1.9 SDI		96-99	6R0412249	**CA020**	
64 1.9 SDI		96-99	357412249	**CA016**	FRONT
75 1.6		94-99	357412249	**CA016**	FRONT
75 1.6		94-99	6R0412249	**CA020**	

follow VOLKSWAGEN

MODELLO MODEL	DIMENSIONI DIMENSIONS	ANNO YEAR	RIF ORIGINALE ORIGINAL REF	RIF CORAM CORAM REF	NOTE NOTES
POLO CLASSIC					
100 1.6		95-01	357412249	**CA016**	FRONT
100 1.6		95-01	6R0412249	**CA020**	
110 1.9 TDI		98-01	357412249	**CA016**	FRONT
110 1.9 TDI		98-01	6R0412249	**CA020**	
57 1.7 SDI		97-01	6R0412249	**CA020**	
60 1.4		95-01	357412249	**CA016**	FRONT
60 1.4		95-01	6R0412249	**CA020**	
64 1.9 SDI		95-99	357412249	**CA016**	FRONT
68 1.9 SDI		99-01	6R0412249	**CA020**	
75 1.4 16V		99-01	6R0412249	**CA020**	
75 1.6		95-01	357412249	**CA016**	FRONT
75 1.6		95-01	6R0412249	**CA020**	
90 1.8		97-01	357412249	**CA016**	FRONT
90 1.9 TDI		96-01	357412249	**CA016**	FRONT
90 1.9 TDI		96-01	6R0412249	**CA020**	
POLO Furgonato					
1.4		98-99	6R0412249	**CA020**	
1.7 SDI		97->	357412249	**CA016**	FRONT
1.9 D		94->	357412249	**CA016**	FRONT
1.9 D		94-99	6R0412249	**CA020**	
1.9 SDI		96-99	6R0412249	**CA020**	
POLO Variant					
1.4		97-01	357412249	**CA016**	FRONT
1.4		97-01	6R0412249	**CA020**	
1.4 16V		99-01	6R0412249	**CA020**	
1.6		97-01	357412249	**CA016**	FRONT
1.6		97-01	6R0412249	**CA020**	
1.7 SDI		97-01	357412249	**CA016**	FRONT
1.7 SDI		97-01	6R0412249	**CA020**	
1.8		97-01	357412249	**CA016**	FRONT
1.8		97-01	6R0412249	**CA020**	
1.9 SDI		97-01	357412249	**CA016**	FRONT
1.9 SDI		97-01	6R0412249	**CA020**	
1.9 TDI		97-01	357412249	**CA016**	FRONT
1.9 TDI		97-01	6R0412249	**CA020**	

follow VOLKSWAGEN

MODELLO MODEL	DIMENSIONI DIMENSIONS	ANNO YEAR	RIF ORIGINALE ORIGINAL REF	RIF CORAM CORAM REF	NOTE NOTES
SANTANA					
1.3		81-83	021156017A	**CA017**	FRONT
1.6 - 1.6 D - 1.6 TD		81-84	021156017A	**CA017**	FRONT
1.8		83-84	021156017A	**CA017**	FRONT
1.9		81-83	021156017A	**CA017**	FRONT
2.0		83-84	021156017A	**CA017**	FRONT
SCIROCCO (53)					
1.3		79-80	021156017A	**CA017**	FRONT
1.5		74-80	021156017A	**CA017**	FRONT
1.6		75-80	021156017A	**CA017**	FRONT
SCIROCCO (53B)					
1.3 - 1.5		80-83	021156017A	**CA017**	FRONT
1.6		80-90	021156017A	**CA017**	FRONT
1.8		82-92	021156017A	**CA017**	FRONT
1.8 16V		85-92	021156017A	**CA017**	
SHARAN					
1.8 T 20V		97->	357412249	**CA016**	FRONT
1.8 T 20V		97-10	6R0412249	**CA020**	
1.9 TDI		95-00	357412249	**CA016**	FRONT
1.9 TDI		02->	357412249	**CA016**	FRONT
1.9 TDI		95-10	6R0412249	**CA020**	
1.9 TDI 4motion		00->	357412249	**CA016**	FRONT
1.9 TDI 4motion		00-10	6R0412249	**CA020**	
2.0		95->	357412249	**CA016**	FRONT
2.0		95-10	6R0412249	**CA020**	
2.0 LPG		06-ott	6R0412249	**CA020**	
2.0 TDI		05-ott	6R0412249	**CA020**	
2.8 V6 24V		00->	357412249	**CA016**	FRONT
2.8 V6 24V		00-10	6R0412249	**CA020**	
2.8 V6 24V 4motion		00->	357412249	**CA016**	FRONT
2.8 V6 24V 4motion		00-10	6R0412249	**CA020**	
2.8 VR6		95-00	357412249	**CA016**	FRONT
2.8 VR6		95-00	6R0412249	**CA020**	
2.8 VR6 Syncro		96-00	357412249	**CA016**	FRONT
2.8 VR6 Syncro		96-00	6R0412249	**CA020**	
TRANSPORTER III pianale piatto					
2.0		79-86		**CA011**	FRONT

follow VOLKSWAGEN

MODELLO MODEL	DIMENSIONI DIMENSIONS	ANNO YEAR	RIF ORIGINALE ORIGINAL REF	RIF CORAM CORAM REF	NOTE NOTES
TRANSPORTER V Autobus					
2.0		03->	7E0412249	**CA019**	
2.0		mar-15	7E0412249A	**CA024**	
2.0 BiTDI - 2.0 BiTDI 4motion		09->	7E0412249	**CA019**	
2.0 BiTDI - 2.0 BiTDI 4motion		set-15	7E0412249A	**CA024**	
2.0 TDI - 2.0 TDI 4motion		09->	7E0412249	**CA019**	
2.0 TDI - 2.0 TDI 4motion		set-15	7E0412249A	**CA024**	
2.0 TSI - 2.0 TSI 4motion		nov-15	7E0412249A	**CA024**	
2.5 TDI 4motion - 3.2 V6		04-set	7E0412249	**CA019**	
3.2 V6 4motion		03-set	7E0412249	**CA019**	
TRANSPORTER V Furgonato					
1.9 TDI		03-set	7E0412249	**CA019**	
2.0		03->	7E0412249	**CA019**	
2.0		mar-15	7E0412249A	**CA024**	
2.0 BiFuel		nov-15	7E0412249A	**CA024**	
2.0 BiTDI - 2.0 BiTDI 4motion		09->	7E0412249	**CA019**	
2.0 BiTDI - 2.0 BiTDI 4motion - 2.0 TDI - 2.0 TDI 4motion		set-15	7E0412249A	**CA024**	
2.0 TDI - 2.0 TDI 4motion		09->	7E0412249	**CA019**	
2.0 TSI - 2.0 TSI 4motion		nov-15	7E0412249A	**CA024**	
2.5 TDI		03-set	7E0412249	**CA019**	
2.5 TDI 4motion		04-set	7E0412249	**CA019**	
3.2 4motion - 3.2 V6		03-set	7E0412249	**CA019**	
TRANSPORTER V Pianale piatto					
2.0		03->	7E0412249	**CA019**	
2.0 BiTDI - 2.0 BiTDI 4motion		09->	7E0412249	**CA019**	
2.0 BiTDI - 2.0 BiTDI 4motion		set-15	7E0412249A	**CA024**	
2.0 TDI - 2.0 TDI 4motion		09->	7E0412249	**CA019**	
2.0 TDI - 2.0 TDI 4motion		set-15	7E0412249A	**CA024**	
2.0 TSI		dic-15	7E0412249A	**CA024**	
2.5 TDI		03-set	7E0412249	**CA019**	
2.6 TDI 4motion		04-set	7E0412249	**CA019**	
3.2 V6		03-set	7E0412249	**CA019**	
TRANSPORTER VI Furgonato					
2.0 TDI - 2.0 TDI 4motion - 2.0 TSI - 2.0 TSI 4motion		15->	7E0412249A	**CA024**	
TRANSPORTER VI Pianale Piatto					
2.0 TDI - 2.0 TDI 4motion - 2.0 TSI		15->	7E0412249A	**CA024**	

follow VOLKSWAGEN

MODELLO MODEL	DIMENSIONI DIMENSIONS	ANNO YEAR	RIF ORIGINALE ORIGINAL REF	RIF CORAM CORAM REF	NOTE NOTES
UP					
1.0		11->	6R0412249	**CA020**	
VENTO					
1.4		91-98	357412249	**CA016**	FRONT
1.4		91-98	021156017A	**CA017**	FRONT
1.4		91-98	6R0412249	**CA020**	
1.6		92-98	357412249	**CA016**	FRONT
1.6		92-98	021156017A	**CA017**	FRONT
1.6		92-98	6R0412249	**CA020**	
1.8 - 1.9 D - 1.9 TD - 2.0		91-98	357412249	**CA016**	FRONT
1.8 - 1.9 D - 1.9 TD - 2.0		91-98	021156017A	**CA017**	FRONT
1.8 - 1.9 D - 1.9 TD - 2.0		91-98	6R0412249	**CA020**	
1.9 SDI		97-99	357412249	**CA016**	FRONT
1.9 SDI		97-98	6R0412249	**CA020**	
1.9 TDI		93-98	357412249	**CA016**	FRONT
1.9 TDI		93-98	021156017A	**CA017**	FRONT
1.9 TDI		93-98	6R0412249	**CA020**	
2.8 VR6		92-98	357412249	**CA016**	FRONT
2.8 VR6		92-98	6R0412249	**CA020**	

VOLVO

MODELLO MODEL	DIMENSIONI DIMENSIONS	ANNO YEAR	RIF ORIGINALE ORIGINAL REF	RIF CORAM CORAM REF	NOTE NOTES
440 K					
1.7		88-96	3411070-0	**CA009**	FRONT
1.7 Turbo		88-96	3411070-0	**CA009**	FRONT
1.8		91-96	3411070-0	**CA009**	FRONT
1.9 Turbo-Diesel		94-96	3411070-0	**CA009**	FRONT
2.0		92-96	3411070-0	**CA009**	FRONT
460 E					
1.7 Turbo		87-96	3411070-0	**CA009**	FRONT
2.0		92-95	3711070-0	**CA009**	FRONT

follow VOLVO

MODELLO MODEL	DIMENSIONI DIMENSIONS	ANNO YEAR	RIF ORIGINALE ORIGINAL REF	RIF CORAM CORAM REF	NOTE NOTES
460 L					
1.6		92-96	3411070-0	**CA009**	FRONT
1.7		89-96	3411070-0	**CA009**	FRONT
1.7 Turbo		89-96	3411070-0	**CA009**	FRONT
1.8		91-96	3411070-0	**CA009**	FRONT
1.9 Turbo-Diesel		94-96	3411070-0	**CA009**	FRONT
2.0		92-96	3411070-0	**CA009**	FRONT
C30					
1.6 - 1.6 D - 1.8 - 2.0 - 2.0 D - 2.4 i - D5 - T5		06-dic	30639948	**CA027**	
1.6 D2 - 2.0 FlexFuel - D3 - D4 - Electric		10-dic	30639948	**CA027**	
C70 II Cabriolet					
2.0 D		08-set	30666530	**CA027**	
2.4 - 2.4 i		06-set	30666530	**CA027**	
2.4 D		lug-13	30666530	**CA027**	
D3 - D4		ott-13	30666530	**CA027**	
D5		giu-13	30666530	**CA027**	
T5		06-set	30666530	**CA027**	
S40 II					
1.6 D2 - D3 - D4 - T5 AWD		10-dic	31262470	**CA027**	
1.8 - 2.0 D		04-ott	31262470	**CA027**	
1.8 FlexFuel - 2.4 D5		06-ott	31262470	**CA027**	
2.0		06-dic	31262470	**CA027**	
2.0 F		09-dic	31262470	**CA027**	
2.4 - T5		04-dic	31262470	**CA027**	
S60 II					
1.5 T3 - 2.0 D2 - 2.0 D3 - 2.0 D4 - 2.0 D5		15->	31681161	**CA025**	
2.0 T		ott-15	31681161	**CA025**	
2.0 T3 - 2.0 T4 - 2.4 D4 AWD		15->	31681161	**CA025**	
3.0 T AWD		14->	31681161	**CA025**	
D3 - D4 - D5 - D5 AWD		ott-15	31681161	**CA025**	
DRIVe / D2		nov-15	31681161	**CA025**	
T3 - T4		ott-15	31681161	**CA025**	
T4F		nov-15	31681161	**CA025**	
T5		10->	31681161	**CA025**	
T6		13->	31681161	**CA025**	
T6 AWD		ott-15	31681161	**CA025**	

follow VOLVO

MODELLO MODEL	DIMENSIONI DIMENSIONS	ANNO YEAR	RIF ORIGINALE ORIGINAL REF	RIF CORAM CORAM REF	NOTE NOTES
S80 II					
1.6 D DRIVe		10-nov	31681161	**CA025**	
1.6 DRIVe		11->	31681161	**CA025**	
2.0		08-dic	31681161	**CA025**	
2.0 Drive-E		14->	31681161	**CA025**	
2.0 FlexFuel		08-nov	31681161	**CA025**	
2.0 T		10->	31681161	**CA025**	
2.0 Tdi		08-nov	31681161	**CA025**	
2.4 D - 2.5 T		06->	31681161	**CA025**	
2.5 T FlexFuel		08-nov	31681161	**CA025**	
3.2		06->	31681161	**CA025**	
3.2 AWD		07-dic	31681161	**CA025**	
4.4 V8 AWD		06-dic	31681161	**CA025**	
D3 - D4		10->	31681161	**CA025**	
D5		06->	31681161	**CA025**	
D5 AWD		07->	31681161	**CA025**	
T4 - T5		10->	31681161	**CA025**	
T4F		11->	31681161	**CA025**	
T6 AWD		lug-16	31681161	**CA025**	
V40 2 Volumi/coda spiovente					
D2 - D3 - T3 GTDi		dic-15	31451587	**CA027**	
D4 - T4 GTDi - T5		12->	31451587	**CA027**	
T2 - T3		15->	31451587	**CA027**	
T2 GTDi - T4 - 1.6 D2		13-15	31451587	**CA027**	
T4 AWD - T5 AWD		13->	31451587	**CA027**	
V50					
1.6		05-dic	31681448	**CA027**	
V51					
1.6 D		05-nov	31681448	**CA027**	
V52					
1.6 D2 - 2.0 FlexFuel - D3 - D4		10-dic	31681448	**CA027**	
V53					
1.8 - 2.0 D - 2.4 - T5 AWD		04-ott	31681448	**CA027**	

follow VOLVO

MODELLO MODEL	DIMENSIONI DIMENSIONS	ANNO YEAR	RIF ORIGINALE ORIGINAL REF	RIF CORAM CORAM REF	NOTE NOTES
V54					
1.8 BiFuel		09-ott	31681448	**CA027**	
V55					
1.8 FlexFuel		05-ott	31681448	**CA027**	
V56					
2.0		06-dic	31681448	**CA027**	
V57					
2.0 D4		05-giu	31681448	**CA027**	
V58					
2.4 D5		06-ott	31681448	**CA027**	
V59					
2.4 Tdi		07-ott	31681448	**CA027**	
V60					
2.0 D2 - 2.0 D3 - 2.0 D4 - 2.0 Polestar AWD		15->	31681161	**CA025**	
2.0 T - 2.0 T5		10->	31681161	**CA025**	
2.0 T4		15->	31681161	**CA025**	
2.4 D5 - 2.4 D5 AWD		nov-15	31681161	**CA025**	
2.4 D5 Hybrid AWD		15->	31681161	**CA025**	
2.4 Hybrid D6 AWD		dic-15	31681161	**CA025**	
D3 - D4 - D5		ott-15	31681161	**CA025**	
D4 AWD		12->	31681161	**CA025**	
D5 AWD		10-nov	31681161	**CA025**	
D6 Hybrid AWD		15->	31681161	**CA025**	
T3		10->	31681161	**CA025**	
T4		ott-15	31681161	**CA025**	
T4F		nov-15	31681161	**CA025**	
T5		04-dic	31681448	**CA027**	
T5 - T6		13->	31681161	**CA025**	
T6 AWD		10->	31681161	**CA025**	

follow VOLVO

MODELLO MODEL	DIMENSIONI DIMENSIONS	ANNO YEAR	RIF ORIGINALE ORIGINAL REF	RIF CORAM CORAM REF	NOTE NOTES
V70 III					
1.6 D		09-nov	31681161	**CA025**	
1.6 DRIVe / D2 - 1.6 T4F		nov-15	31681161	**CA025**	
2.0		07-nov	31681161	**CA025**	
2.0 D		lug-15	31681161	**CA025**	
2.0 FlexFuel		08-nov	31681161	**CA025**	
2.0 T		09-nov	31681161	**CA025**	
2.4 D		07-ott	31681161	**CA025**	
2.5 T		07-dic	31681161	**CA025**	
2.5 T FlexFuel		08-nov	31681161	**CA025**	
3.2		lug-14	31681161	**CA025**	
3.2 AWD		lug-15	31681161	**CA025**	
D3 - D4 - D5 - D5 AWD		lug-15	31681161	**CA025**	
D4 AWD		07->	31681161	**CA025**	
T4		ott-15	31681161	**CA025**	
T5		10->	31681161	**CA025**	
T6 AWD		lug-15	31681161	**CA025**	
XC40					
2.0 D4 AWD - T5 AWD		07->	32221148	**CA027**	
XC60					
2.0 T		09-dic	31681161	**CA025**	
2.4 D		09-ott	31681161	**CA025**	
2.4 D / D3 / D4 AWD		ago-17	31681161	**CA025**	
3.2 AWD		09-ott	31681161	**CA025**	
D3 - D4		ott-15	31681161	**CA025**	
D4 AWD		13-15	31681161	**CA025**	
D5 AWD		ago-15	31681161	**CA025**	
T5		10->	31681161	**CA025**	
T6		13->	31681161	**CA025**	
T6 AWD		ago-17	31681161	**CA025**	
XC70 II					
2.4 D / D4 AWD		07->	31681161	**CA025**	
3.2 AWD		07->	31681161	**CA025**	
D3		ott-15	31681161	**CA025**	
D4 - D4 AWD		13->	31681161	**CA025**	
D5 AWD		07->	31681161	**CA025**	
T5		13->	31681161	**CA025**	
T6 AWD		10->	31681161	**CA025**	

CUSCINETTI AMMORTIZZATORI
SHOCK ABSORBER BEARINGS
ROULEMENTS AMORTISSEUR
LISTA DI COMPARAZIONE – CROSS REFERENCES – REFERENCES CROISEES

CORAM	APPLICATION	O.E.	SKF	LORETT	SNR	Q.H	SACHS	BOGE	RUVILLE
CA006	ALFA / FIAT / LANCIA	60806398	VKDA35200T	C086	M258.03	QAM101	801007		
CA006	ALFA ROMEO	7601502	VKDA35200T	C086	M258.03	QAM101	801007		
CA006	ALFA ROMEO	7602150	VKDA35200T	C086	M258.03	QAM101	801007		
CA006	FIAT	7601502	VKDA35200T	C086	M258.03	QAM101	801007		
CA006	FIAT	7714789	VKDA35200T	C086	M258.03	QAM101	801007		
CA006	LANCIA	7601502	VKDA35200T	C086	M258.03	QAM101	801007		
CA008	CITROEN	75472408	VKD24000	C508					
CA008	CITROEN	26204359	VKD24000	C508					
CA008	CITROEN	7903090223	VKD24000	C508					
CA008	FIAT	7725155	VKD24000	C508					
CA009	CITROEN	9151063380	VKD35001	C504	M259.01	QAM111	801010	87-3831	
CA009	CITROEN	91537289	VKD35001	C504	M259.01	QAM111	801010	87-3831	
CA009	CITROEN	5035.27	VKD35001	C504	M259.01	QAM111	801010	87-3831	
CA009	CITROEN	5035.19	VKD35001	C504	M259.01	QAM111	801010	87-3831	
CA009	PEUGEOT	5035.20	VKD35001	C504	M259.01	QAM111	801010	87-3831	
CA009	PEUGEOT	5035.18	VKD35001	C504	M259.01	QAM111	801010	87-3831	
CA009	PEUGEOT	5035.23	VKD35001	C504	M259.01	QAM111	801010	87-3831	
CA009	PEUGEOT	5035.27	VKD35001	C504	M259.01	QAM111	801010	87-3831	
CA009	RENAULT	7700803635	VKD35001	C504	M259.01	QAM111	801010	87-3831	
CA009	RENAULT	7700777654	VKD35001	C504	M259.01	QAM111	801010	87-3831	
CA009	RENAULT	7700797666	VKD35001	C504	M259.01	QAM111	801010	87-3831	
CA009	VOLVO	3411070-0	VKD35001	C504	M255.01	QAM111	801010	87-3831	
CA011	RENAULT	7700800107		C506	M255.04	QAM112	801001	87-384-L	
CA011	RENAULT	6001025850		C506	M255.04	QAM112	801001	87-384-L	
CA012	CITROEN	5035.30	VKD35017	C479	M259.05	QAM138	801037	88-723-L	
CA012	CITROEN	5035.30	VKD35313	C479	M259.05	QAM138	801037	88-723-L	
CA012	CITROEN	5035.39	VKD35017	C479	M259.05	QAM138	801037	88-723-L	
CA012	CITROEN	5035.39	VKD35313	C479	M259.05	QAM138	801037	88-723-L	
CA012	CITROEN	5035.47	VKD35017	C479	M259.05	QAM138	801037	88-723-L	
CA012	CITROEN	5035.47	VKD35313	C479	M259.05	QAM138	801037	88-723-L	
CA012	FIAT	1318573080	VKD35017	C479	M259.05	QAM138	801037	88-723-L	
CA012	FIAT	1318573080	VKD35313	C479	M259.05	QAM138	801037	88-723-L	
CA012	FIAT	1302443080	VKD35017	C479	M259.05	QAM138	801037	88-723-L	
CA012	FIAT	1302443080	VKD35313	C479	M259.05	QAM138	801037	88-723-L	
CA012	PEUGEOT	5035.30	VKD35017	C479	M259.05	QAM138	801037	88-723-L	
CA012	PEUGEOT	5035.30	VKD35313	C479	M259.05	QAM138	801037	88-723-L	
CA012	PEUGEOT	5035.39	VKD35017	C479	M259.05	QAM138	801037	88-723-L	
CA012	PEUGEOT	5035.39	VKD35313	C479	M259.05	QAM138	801037	88-723-L	

CUSCINETTI AMMORTIZZATORI
SHOCK ABSORBER BEARINGS
ROULEMENTS AMORTISSEUR
LISTA DI COMPARAZIONE – CROSS REFERENCES – REFERENCES CROISEES

CORAM	APPLICATION	O.E.	SKF	LORETT	SNR	Q.H	SACHS	BOGE	RUVILLE
CA012	PEUGEOT	5035.47	VKD35017	C479	M259.05	QAM138	801037	88-723-L	
CA012	PEUGEOT	5035.47	VKD35313	C479	M259.05	QAM138	801037	88-723-L	
CA013	ALFA ROMEO	60501446		C088	M260.02		801025	87-107-L	
CA014	CITROEN	5035.38	VKD35018T	C099	M259.08	QAM115	801011	87-413-L	
CA014	CITROEN	503555	VKD35018T	C099	M259.08	QAM115	801011	87-413-L	
CA014	CITROEN	5035.29	VKD35018T	C099	M259.08	QAM115	801011	87-413-L	
CA014	CITROEN	5035.43	VKD35018T	C099	M259.08	QAM115	801011	87-413-L	
CA014	FIAT	1318825080	VKD35018T	C099	M259.08	QAM115	801011	87-413-L	
CA014	FIAT/LANCIA	1303672080	VKD35018T	C099	M259.08	QAM115	801011	87-413-L	
CA014	LANCIA	5035.29	VKD35018T	C099	M259.08	QAM115	801011	87-413-L	
CA014	PEUGEOT	503555	VKD35018T	C099	M259.08	QAM115	801011	87-413-L	
CA014	PEUGEOT	5035.29	VKD35018T	C099	M259.08	QAM115	801011	87-413-L	
CA014	PEUGEOT	5035.38	VKD35018T	C099	M259.08	QAM115	801011	87-413-L	
CA014	PEUGEOT	5035.43	VKD35018T	C099	M259.08	QAM115	801011	87-413-L	
CA015	FIAT/LANCIA/SEAT	440895	VKDA37200T	C093	M258.01	QAM103	801020	87-388-2	
CA015	FIAT/LANCIA/SEAT	440895	VKDA37201T	C093	M258.01	QAM103	801020	87-388-2	
CA015	FIAT/LANCIA/SEAT	440895	VKDA37202T	C093	M258.01	QAM103	801020	87-388-2	
CA015	FIAT/LANCIA/SEAT	440895	VKDA37203T	C093	M258.01	QAM103	801020	87-388-2	
CA015	FIAT/LANCIA/SEAT	440895	VKDA37204T	C093	M258.01	QAM103	801020	87-388-2	
CA016	AUDI/SEAT/SKODA/VW	1J0412249	VKD35110	C626	M254.01		801016	87-398-L	
CA016	AUDI/SEAT/SKODA/VW	357412249	VKD35110	C626	M254.01		801016	87-398-L	
CA016	AUDI/SEAT/SKODA/VW	357412249A	VKD35110	C626	M254.01		801016	87-398-L	
CA016	FORD	7201688	VKD35110	C626	M254.01		801016	87-398-L	
CA016	FORD	95VW3K031AA	VKD35110	C626	M254.01		801016	87-398-L	
CA017	SEAT	5E021156011A	VKD35012	C621	M254.00	QAM125	801008	87-083-L	865400
CA017	SEAT/VW/AUDI	021156017A	VKD35012	C621	M254.00	QAM125	801008	87-083-L	865400
CA017	SEAT/VW/AUDI	191412249	VKD35012	C621	M254.00	QAM125	801008	87-083-L	865400
CA017	SEAT/VW/AUDI	377412335A	VKD35012	C621	M254.00	QAM125	801008	87-083-L	865400
CA017	SEAT/VW/AUDI	823412249	VKD35012	C621	M254.00	QAM125	801008	87-083-L	865400
CA017	VOLVO	3266405-4	VKD35012	C621	M254.00	QAM125	801008	87-083-L	865400
CA017	VOLVO/VW	3266405	VKD35012	C621	M254.00	QAM125	801008	87-083-L	865400
CA018	LADA	118-2902840-01							
CA019	VOLKSWAGEN	7E0412249			M254.08		801454	88-385-L	865403
CA019	VOLKSWAGEN	7H0412249A			M254.08		801454	88-385-L	865403
CA020	AUDI/SEAT/SKODA/VW	1J0412249							
CA020	AUDI/SEAT/SKODA/VW	6R0412249							
CA020	FORD	1102592							
CA020	FORD	7201688							

CORAM	APPLICATION	O.E.	SKF	LORETT	SNR	Q.H	SACHS	BOGE	RUVILLE
CA020	SEAT	357412249							
CA020	SMART	4503300051							
CA023	RENAULT	543251867R	VKD35048		M255.10	QAM174			
CA023	RENAULT	543256557R	VKD35048		M255.10	QAM174			
CA023	RENAULT	543250005R	VKD35048		M255.10	QAM174			
CA024	VOLKSWAGEN	7E0412249A				QAM164	801055	84-224-L	
CA024	VOLKSWAGEN	7E0412249B				QAM164	801055	84-224-L	
CA025	FORD	6G91-3K099-NBA	VKD35036		M252.14	QAM169	801050	84-147-L	
CA025	FORD	1801056	VKD35036		M252.14	QAM169	801050	84-147-L	
CA025	FORD	1539863	VKD35036		M252.14	QAM169	801050	84-147-L	
CA025	FORD	1679526	VKD35036		M252.14	QAM169	801050	84-147-L	
CA025	FORD	6G91-3K099-AA	VKD35036		M252.14	QAM169	801050	84-147-L	
CA025	FORD	DG9C-3K099-BXA	VKD35036		M252.14	QAM169	801050	84-147-L	
CA025	FORD	6G91-3K099-ABB	VKD35036		M252.14	QAM169	801050	84-147-L	
CA025	FORD	6G91-3K099-ACA	VKD35036		M252.14	QAM169	801050	84-147-L	
CA025	FORD	1465258	VKD35036		M252.14	QAM169	801050	84-147-L	
CA025	FORD	1466167	VKD35036		M252.14	QAM169	801050	84-147-L	
CA025	FORD	6G91-3K099-ACB	VKD35036		M252.14	QAM169	801050	84-147-L	
CA025	FORD	6G1-3K099-NAB	VKD35036		M252.14	QAM169	801050	84-147-L	
CA025	FORD	1441144	VKD35036		M252.14	QAM169	801050	84-147-L	
CA025	FORD	1510474	VKD35036		M252.14	QAM169	801050	84-147-L	
CA025	FORD	1433283	VKD35036		M252.14	QAM169	801050	84-147-L	
CA025	FORD	6G91-3K099-ABC	VKD35036		M252.14	QAM169	801050	84-147-L	
CA025	VOLVO	31277826	VKD35036		M252.14	QAM169	801050	84-147-L	
CA025	VOLVO	31681161	VKD35036		M252.14	QAM169	801050	84-147-L	
CA025	VOLVO	30736504	VKD35036		M252.14	QAM169	801050	84-147-L	
CA025	VOLVO	30681642	VKD35036		M252.14	QAM169	801050	84-147-L	
CA025	VOLVO	30794009	VKD35036		M252.14	QAM169	801050	84-147-L	
CA025	VOLVO	31201027	VKD35036		M252.14	QAM169	801050	84-147-L	
CA026	MERCEDES-BENZ	A2049810025			M251.01	QAM173	801040	88-761-L	865102
CA026	MERCEDES-BENZ	2049810025			M251.01	QAM173	801040	88-761-L	865102
CA027	FORD	1223835	VKD35035		M252.11	QAM159	801041	88-790-L	
CA027	FORD	1250820	VKD35035		M252.11	QAM159	801041	88-790-L	
CA027	FORD	1255350	VKD35035		M252.11	QAM159	801041	88-790-L	
CA027	FORD	1508111	VKD35035		M252.11	QAM159	801041	88-790-L	
CA027	FORD	1674672	VKD35035		M252.11	QAM159	801041	88-790-L	
CA027	FORD	1695818	VKD35035		M252.11	QAM159	801041	88-790-L	
CA027	FORD	1783331	VKD35035		M252.11	QAM159	801041	88-790-L	

CUSCINETTI AMMORTIZZATORI
SHOCK ABSORBER BEARINGS
ROULEMENTS AMORTISSEUR
LISTA DI COMPARAZIONE – CROSS REFERENCES – REFERENCES CROISEES

CORAM	APPLICATION	O.E.	SKF	LORETT	SNR	Q.H	SACHS	BOGE	RUVILLE
CA027	FORD	1787358	VKD35035		M252.11	QAM159	801041	88-790-L	
CA027	FORD	1820399	VKD35035		M252.11	QAM159	801041	88-790-L	
CA027	FORD	1907038	VKD35035		M252.11	QAM159	801041	88-790-L	
CA027	FORD	2084212	VKD35035		M252.11	QAM159	801041	88-790-L	
CA027	FORD	3M51-3K099-AB	VKD35035		M252.11	QAM159	801041	88-790-L	
CA027	FORD	3M51-3K099-AC	VKD35035		M252.11	QAM159	801041	88-790-L	
CA027	FORD	3M51-3K099-AD	VKD35035		M252.11	QAM159	801041	88-790-L	
CA027	FORD	3M51-3K099-AA	VKD35035		M252.11	QAM159	801041	88-790-L	
CA027	FORD	9M51-3K099-AB	VKD35035		M252.11	QAM159	801041	88-790-L	
CA027	FORD	9M51-3K099-AA	VKD35035		M252.11	QAM159	801041	88-790-L	
CA027	FORD	DV61-3K099-AB	VKD35035		M252.11	QAM159	801041	88-790-L	
CA027	FORD	DV61-3K099-AC	VKD35035		M252.11	QAM159	801041	88-790-L	
CA027	FORD	DV61-3K099-AD	VKD35035		M252.11	QAM159	801041	88-790-L	
CA027	FORD	DV61-3K099-AE	VKD35035		M252.11	QAM159	801041	88-790-L	
CA027	FORD	DV61-3K099-AF	VKD35035		M252.11	QAM159	801041	88-790-L	
CA027	MAZDA	BBM2-34-38X	VKD35035		M252.11	QAM159	801041	88-790-L	
CA027	MAZDA	BP4K-34-38XA	VKD35035		M252.11	QAM159	801041	88-790-L	
CA027	MAZDA	BP4K-34-38XB	VKD35035		M252.11	QAM159	801041	88-790-L	
CA027	VOLVO	30639948	VKD35035		M252.11	QAM159	801041	88-790-L	
CA027	VOLVO	30666530	VKD35035		M252.11	QAM159	801041	88-790-L	
CA027	VOLVO	31262470	VKD35035		M252.11	QAM159	801041	88-790-L	
CA027	VOLVO	31451587	VKD35035		M252.11	QAM159	801041	88-790-L	
CA027	VOLVO	31681448	VKD35035		M252.11	QAM159	801041	88-790-L	
CA027	VOLVO	32221148	VKD35035		M252.11	QAM159	801041	88-790-L	
CA028	HYUNDAI/KIA	54612-3S000	VKD35041			QAM185	801056	84-381-A	
CA028	KIA	96626331	VKD35041			QAM185	801056	84-381-A	
CA028	OPEL/VAUXHALL/CHEVROLET/HYUNDAI	96626331	VKD35041			QAM185	801056	84-381-A	
CA029	RENAULT	8200106131			M255.08	QAM165			
CA029	RENAULT	8200485734			M255.08	QAM165			
CA029	RENAULT	8200824774			M255.08	QAM165			
CA030	MERCEDES-BENZ	4153220184			M255.09	QAM162			865502
CA030	NISSAN	54325-AX000			M255.09	QAM162			865502
CA030	NISSAN	54325-JE20C			M255.09	QAM162			865502
CA030	NISSAN	54325-1KA0A			M255.09	QAM162			865502
CA030	NISSAN	54325-JE20B			M255.09	QAM162			865502
CA030	NISSAN	54325-JE21C			M255.09	QAM162			865502
CA030	NISSAN	54325-3RA0A			M255.09	QAM162			865502
CA030	NISSAN/RENAULT	54325-ED00A			M255.09	QAM162			865502

CUSCINETTI AMMORTIZZATORI
SHOCK ABSORBER BEARINGS
ROULEMENTS AMORTISSEUR
LISTA DI COMPARAZIONE – CROSS REFERENCES – REFERENCES CROISEES

CORAM	APPLICATION	O.E.	SKF	LORETT	SNR	Q.H	SACHS	BOGE	RUVILLE
CA030	NISSAN/RENAULT	54325-ED02A			M255.09	QAM162			865502
CA030	RENAULT	8200200017			M255.09	QAM162			865502
CA030	RENAULT	8200948647			M255.09	QAM162			865502
CA030	RENAULT	543250375R			M255.09	QAM162			865502
CA031	VAUXHALL	4806308	VKD35045						
CA032	CITROEN/PEUGEOT	5035.57	VKD35030		M259.10	QAM166	801042	88-792-L	
CA032	CITROEN/PEUGEOT	5035C2	VKD35030		M259.10	QAM166	801042	88-792-L	
CA032	DAIHATSU/TOYOTA	486190D011	VKD35030		M259.10	QAM166	801042	88-792-L	
CA032	HONDA	51726SAA003	VKD35030		M259.10	QAM166	801042	88-792-L	
CA032	HONDA	51726SAA013	VKD35030		M259.10	QAM166	801042	88-792-L	
CA032	HONDA	51726SFA005	VKD35030		M259.10	QAM166	801042	88-792-L	
CA032	HYUNDAI	54612B9000	VKD35030		M259.10	QAM166	801042	88-792-L	
CA032	SUZUKI	4174158J00	VKD35030		M259.10	QAM166	801042	88-792-L	
CA032	TOYOTA	4830452040	VKD35030		M259.10	QAM166	801042	88-792-L	
CA032	TOYOTA	4830452050	VKD35030		M259.10	QAM166	801042	88-792-L	
CA032	TOYOTA	4830452051	VKD35030		M259.10	QAM166	801042	88-792-L	
CA032	TOYOTA	486190D010	VKD35030		M259.10	QAM166	801042	88-792-L	
CA032	TOYOTA	486190D031	VKD35030		M259.10	QAM166	801042	88-792-L	
CA032	TOYOTA	486190H010	VKD35030		M259.10	QAM166	801042	88-792-L	
CA033	OPEL	13500664	VKD35042						
CA033	OPEL	13500663	VKD35042						
CA033	OPEL	13503548	VKD35042						
CA033	OPEL	13503549	VKD35042						
CA033	OPEL	20859330	VKD35042						
CA033	OPEL	20967947	VKD35042						
CA033	OPEL	22744295	VKD35042						
CA033	OPEL	22802090	VKD35042						
CA033	OPEL	22865931	VKD35042						
CA033	OPEL	22894950	VKD35042						
CA033	OPEL	344469	VKD35042						
CA033	OPEL	3444598	VKD35042						
CA033	OPEL	92245258	VKD35042						
CA034	GENERAL MOTORS	93253884	VKD35005		M253.05	QAM152	801039	87-023-L	
CA034	OPEL	344505	VKD35005		M253.05	QAM152	801039	87-023-L	
CA034	OPEL/VAUZHALL/GENERAL MOTORS	90121275	VKD35005		M253.05	QAM152	801039	87-023-L	
CA035	RENAULT	543259539R			M255.12	QAM172			
CA035	SMART	4533210084			M255.12	QAM172			
CA037	FIAT	51755689	VKDA35517		M253.09		801036		

CUSCINETTI AMMORTIZZATORI
SHOCK ABSORBER BEARINGS
ROULEMENTS AMORTISSEUR
LISTA DI COMPARAZIONE – CROSS REFERENCES – REFERENCES CROISEES

CORAM	APPLICATION	O.E.	SKF	LORETT	SNR	Q.H	SACHS	BOGE	RUVILLE
CA037	FIAT	51755688	VKDA35517		M253.09		801036		
CA037	OPEL	344538	VKDA35517		M253.09		801036		
CA037	OPEL	344533	VKDA35517		M253.09		801036		
CA037	OPEL	344530	VKDA35517		M253.09		801036		
CA037	OPEL	344537	VKDA35517		M253.09		801036		
CA037	OPEL	344529	VKDA35517		M253.09		801036		
CA037	OPEL	344536	VKDA35517		M253.09		801036		
CA037	OPEL	344665	VKDA35517		M253.09		801036		
CA037	SAAB	13178147	VKDA35517		M253.09		801036		
CA037	SAAB	24435884	VKDA35517		M253.09		801036		
CA037	SAAB/VAUXHALL	13270705	VKDA35517		M253.09		801036		
CA037	SAAB/VAUXHALL	13188764	VKDA35517		M253.09		801036		
CA037	SAAB/VAUXHALL/CADILLAC	13188763	VKDA35517		M253.09		801036		
CA037	VAUXHALL	13156294	VKDA35517		M253.09		801036		
CA037	VAUXHALL	13105976	VKDA35517		M253.09		801036		
CA037	VAUXHALL/CADILLAC	9191181	VKDA35517		M253.09		801036		
CA038	OPEL	312510							865308
CA038	OPEL/VAUXHALL/GENERAL MOTORS	90147276							865308
CA039	CITROEN/PEUGEOT	9800480380	VKDA35338		M259.12	QAM192			
CA040	FIAT/JEEP	52042666				EMA4853	803169	84-286-A	
CA040	FIAT/JEEP	52017224				EMA4853	803169	84-286-A	
CA041	MERCEDES-BENZ	6399810525				QAM186	801048	84-063-L	865104
CA041	MERCEDES-BENZ	A6399810525				QAM186	801048	84-063-L	865104
CA042	MERCEDES-BENZ	A4473210083					801064	84-462-L	

CUSCINETTI AMMORTIZZATORI
SHOCK ABSORBER BEARINGS
ROULEMENTS AMORTISSEUR

LISTA DI COMPARAZIONE CON L'ORIGINALE – OES CROSS REFERENCES – OES REFERENCES CROISEES

ALFA/FIAT/LANCIA	CORAM
60806398	CA006
ALFAROMEO	**CORAM**
60501446	CA013
7601502	CA006
7602150	CA006
AUDI/SEAT/SKODA/VW	**CORAM**
1J0412249	CA016
1J0412249	CA020
357412249	CA016
357412249A	CA016
6R0412249	CA020
CITROEN	**CORAM**
26204359	CA008
503555	CA014
5035.19	CA009
5035.27	CA009
5035.29	CA014
5035.30	CA012
5035.38	CA014
5035.39	CA012
5035.43	CA014
5035.47	CA012
75472408	CA008
7903090223	CA008
9151063380	CA009
91537289	CA009
CITROEN/PEUGEOT	**CORAM**
5035.57	CA032
5035C2	CA032
9800480380	CA039
DAIHATSU/TOYOTA	**CORAM**
486190D011	CA032

FIAT	CORAM
1302443080	CA012
1318573080	CA012
1318825080	CA014
51755688	CA037
51755689	CA037
7601502	CA006
7714789	CA006
7725155	CA008
FIAT/JEEP	**CORAM**
52017224	CA040
52042666	CA040
FIAT/LANCIA	**CORAM**
1303672080	CA014
FIAT/LANCIA/SEAT	**CORAM**
440895	CA015
FORD	**CORAM**
1102592	CA020
1223835	CA027
1250820	CA027
1255350	CA027
1433283	CA025
1441144	CA025
1465258	CA025
1466167	CA025
1508111	CA027
1510474	CA025
1539863	CA025
1674672	CA027
1679526	CA025
1695818	CA027
1783331	CA027
1787358	CA027
1801056	CA025
1820399	CA027
1907038	CA027

2084212	CA027
3M51-3K099-AA	CA027
3M51-3K099-AB	CA027
3M51-3K099-AC	CA027
3M51-3K099-AD	CA027
6G1-3K099-NAB	CA025
6G91-3K099-AA	CA025
6G91-3K099-ABB	CA025
6G91-3K099-ABC	CA025
6G91-3K099-ACA	CA025
6G91-3K099-ACB	CA025
6G91-3K099-NBA	CA025
7201688	CA016
7201688	CA020
95VW3K031AA	CA016
9M51-3K099-AA	CA027
9M51-3K099-AB	CA027
DG9C-3K099-BXA	CA025
DV61-3K099-AB	CA027
DV61-3K099-AC	CA027
DV61-3K099-AD	CA027
DV61-3K099-AE	CA027
DV61-3K099-AF	CA027
GENERALMOTORS	**CORAM**
93253884	CA034
HONDA	**CORAM**
51726SAA003	CA032
51726SAA013	CA032
51726SFA005	CA032
HYUNDAI	**CORAM**
54612B9000	CA032
HYUNDAI/KIA	**CORAM**
54612-3S000	CA028
KIA	**CORAM**
96626331	CA028

CUSCINETTI AMMORTIZZATORI
SHOCK ABSORBER BEARINGS
ROULEMENTS AMORTISSEUR

LISTA DI COMPARAZIONE CON L'ORIGINALE – OES CROSS REFERENCES – OES REFERENCES CROISEES

LADA	CORAM
118-2902840-01	CA018
LANCIA	**CORAM**
5035.29	CA014
7601502	CA006
MAZDA	**CORAM**
BBM2-34-38X	CA027
BP4K-34-38XA	CA027
BP4K-34-38XB	CA027
MERCEDES-BENZ	**CORAM**
2049810025	CA026
4153220184	CA030
6399810525	CA041
A2049810025	CA026
A4473210083	CA042
A6399810525	CA041
NISSAN	**CORAM**
54325-1KA0A	CA030
54325-3RA0A	CA030
54325-AX000	CA030
54325-JE20B	CA030
54325-JE20C	CA030
54325-JE21C	CA030
NISSAN/RENAULT	**CORAM**
54325-ED00A	CA030
54325-ED02A	CA030
OPEL	**CORAM**
13500663	CA033
13500664	CA033
13503548	CA033
13503549	CA033
20859330	CA033
20967947	CA033
22744295	CA033
22802090	CA033
22865931	CA033
22894950	CA033
312510	CA038
3444598	CA033
344469	CA033
344505	CA034
344529	CA037
344530	CA037
344533	CA037
344536	CA037
344537	CA037
344538	CA037
344665	CA037
92245258	CA033
OPEL/VAUXHALL/CHEVROLET/HYUNDAI	**CORAM**
96626331	CA028
OPEL/VAUXHALL/GENERAL MOTORS	**CORAM**
90147276	CA038
OPEL/VAUZHALL/GENERAL MOTORS	**CORAM**
90121275	CA034
PEUGEOT	**CORAM**
503555	CA014
5035.18	CA009
5035.20	CA009
5035.23	CA009
5035.27	CA009
5035.29	CA014
5035.30	CA012
5035.38	CA014
5035.39	CA012
5035.43	CA014
5035.47	CA012
RENAULT	**CORAM**
543250005R	CA023
543250375R	CA030
543251867R	CA023
543256557R	CA023
543259539R	CA035
6001025850	CA011
7700777654	CA009
7700797666	CA009
7700800107	CA011
7700803635	CA009
8200106131	CA029
8200200017	CA030
8200485734	CA029
8200824774	CA029
8200948647	CA030
SAAB	**CORAM**
13178147	CA037
24435884	CA037
SAAB/VAUXHALL	**CORAM**
13188764	CA037
13270705	CA037
SAAB/VAUXHALL/CADILLAC	**CORAM**
13188763	CA037
SEAT	**CORAM**
357412249	CA020
SE021156011A	CA017
SEAT/VW/AUDI	**CORAM**
021156017A	CA017
191412249	CA017
377412335A	CA017
823412249	CA017
SMART	**CORAM**
4503300051	CA020
4533210084	CA035

SUZUKI	CORAM
4174158J00	CA032
TOYOTA	**CORAM**
4830452040	CA032
4830452050	CA032
4830452051	CA032
486190D010	CA032
486190D031	CA032
486190H010	CA032
VAUXHALL	**CORAM**
13105976	CA037
13156294	CA037
4806308	CA031
VAUXHALL/CADILLAC	**CORAM**
9191181	CA037
VOLKSWAGEN	**CORAM**
7E0412249	CA019
7E0412249A	CA024
7E0412249B	CA024
7H0412249A	CA019
VOLVO	**CORAM**
30639948	CA027
30666530	CA027
30681642	CA025
30736504	CA025
30794009	CA025
31201027	CA025
31262470	CA027
31277826	CA025
31451587	CA027
31681161	CA025
31681448	CA027
32221148	CA027
3266405-4	CA017
3411070-0	CA009

VOLVO/VW	CORAM
3266405	CA017

CUSCINETTI AMMORTIZZATORI
SHOCK ABSORBER BEARINGS
ROULEMENTS AMORTISSEUR

LISTA DI COMPARAZIONE CON COMPETITORS – COMPETITORS CROSS REFERENCES
REFERENCES CROISEES AVEC CODES DES CONCURRENTS

BOGE	CORAM
84-063-L	CA041
84-147-L	CA025
84-224-L	CA024
84-286-A	CA040
84-381-A	CA028
84-462-L	CA042
87-023-L	CA034
87-083-L	CA017
87-107-L	CA013
87-3831	CA009
87-384-L	CA011
87-388-2	CA015
87-398-L	CA016
87-413-L	CA014
88-385-L	CA019
88-723-L	CA012
88-761-L	CA026
88-790-L	CA027
88-792-L	CA032

LORETT	CORAM
C086	CA006
C088	CA013
C093	CA015
C099	CA014
C479	CA012
C504	CA009
C506	CA011
C508	CA008
C621	CA017
C626	CA016

Q.H	CORAM
EMA4853	CA040
QAM101	CA006
QAM103	CA015
QAM111	CA009
QAM112	CA011
QAM115	CA014
QAM125	CA017
QAM138	CA012
QAM152	CA034
QAM159	CA027
QAM162	CA030
QAM164	CA024
QAM165	CA029
QAM166	CA032
QAM169	CA025
QAM172	CA035
QAM173	CA026
QAM174	CA023
QAM185	CA028
QAM186	CA041
QAM192	CA039

RUVILLE	CORAM
865102	CA026
865104	CA041
865308	CA038
865400	CA017
865403	CA019
865502	CA030

SACHS	CORAM
801001	CA011
801007	CA006
801008	CA017
801010	CA009
801011	CA014
801016	CA016
801020	CA015
801025	CA013
801036	CA037
801037	CA012
801039	CA034
801040	CA026
801041	CA027
801042	CA032
801048	CA041
801050	CA025
801055	CA024
801056	CA028
801064	CA042
801454	CA019
803169	CA040

SKF	CORAM
VKD 35110	CA016
VKD24000	CA008
VKD35001	CA009
VKD35005	CA034
VKD35012	CA017
VKD35017	CA012
VKD35018T	CA014
VKD35030	CA032
VKD35035	CA027
VKD35036	CA025
VKD35041	CA028
VKD35042	CA033
VKD35045	CA031
VKD35048	CA023
VKD35313	CA012
VKDA35200 T	CA006
VKDA35338	CA039
VKDA35517	CA037
VKDA37200T	CA015
VKDA37201T	CA015
VKDA37202T	CA015
VKDA37203T	CA015
VKDA37204T	CA015

SNR	CORAM
M251.01	CA026
M252.11	CA027
M252.14	CA025
M253.05	CA034

M253.09	CA037
M254.00	CA017
M254.01	CA016
M254.08	CA019
M255.01	CA009
M255.04	CA011
M255.08	CA029
M255.09	CA030
M255.10	CA023
M255.12	CA035
M258.01	CA015
M258.03	CA006
M259.01	CA009
M259.05	CA012
M259.08	CA014
M259.10	CA032
M259.12	CA039
M260.02	CA013

CUSCINETTI AMMORTIZZATORI
SHOCK ABSORBER BEARINGS
ROULEMENTS AMORTISSEUR
IMMAGINI – IMAGES – IMAGES

CA006

ALFA / FIAT / LANCIA	60806398	LANCIA	7601502
ALFA ROMEO	7601502		
ALFA ROMEO	7602150		
FIAT	7601502		
FIAT	7714789		

CA008

CITROEN	26204359		
CITROEN	75472408		
CITROEN	7903090223		
FIAT	7725155		

CA009

CITROEN	5035.19	PEUGEOT	5035.20
CITROEN	5035.27	PEUGEOT	5035.23
CITROEN	9151063380	PEUGEOT	5035.27
CITROEN	91537289	RENAULT	7700777654
PEUGEOT	5035.18	RENAULT	7700797666

CA011

RENAULT	6001025850		
RENAULT	7700800107		

CA012

CITROEN	5035.30	CITROEN	5035.47
CITROEN	5035.30	FIAT	1302443080
CITROEN	5035.39	FIAT	1302443080
CITROEN	5035.39	FIAT	1318573080
CITROEN	5035.47	FIAT	1318573080

CA013

ALFA ROMEO	60501446		

CA014

CITROEN	5035 55	FIAT/LANCIA	1303672080
CITROEN	5035.29	LANCIA	5035.29
CITROEN	5035.38	PEUGEOT	5035 55
CITROEN	5035.43	PEUGEOT	5035.29
FIAT	1318825080	PEUGEOT	5035.38

CA015

FIAT/LANCIA/SEAT	440895		
FIAT/LANCIA/SEAT	440895		
FIAT/LANCIA/SEAT	440895		
FIAT/LANCIA/SEAT	440895		
FIAT/LANCIA/SEAT	440895		

CA016

AUDI/SEAT/SKODA/VW	1J0412249		
AUDI/SEAT/SKODA/VW	357412249		
AUDI/SEAT/SKODA/VW	357412249 A		
FORD	7201688		
FORD	95VW3K031AA		

CA017

SEAT	SE021156011A	VOLVO	3266405-4
SEAT/VW/AUDI	021156017A	VOLVO/VW	3266405
SEAT/VW/AUDI	191412249		
SEAT/VW/AUDI	377412335A		
SEAT/VW/AUDI	823412249		

CA018

LADA	118-2902840-01		

CA019

VOLKSWAGEN	7E0 412 249		
VOLKSWAGEN	7H0 412 249 A		

CA020

AUDI/SEAT/SKODA/VW	1J0412249	SMART	4503300051
AUDI/SEAT/SKODA/VW	6R0412249		
FORD	1102592		
FORD	7201688		
SEAT	357412249		

CA023

RENAULT	543250005R		
RENAULT	543251867R		
RENAULT	543256557R		

CA024

VOLKSWAGEN	7E0 412 249 A		
VOLKSWAGEN	7E0 412 249 B		

CA025

FORD	1433283	FORD	1539863
FORD	1441144	FORD	1679526
FORD	1465258	FORD	1801056
FORD	1466167	FORD	6G1-3K099-NAB
FORD	1510474	FORD	6G91-3K099-AA

CA026

MERCEDES-BENZ	2049810025		
MERCEDES-BENZ	A2049810025		

CA027

FORD	1223835	FORD	1695818
FORD	1250820	FORD	1783331
FORD	1255350	FORD	1787358
FORD	1508111	FORD	1820399
FORD	1674672	FORD	1907038

CA028

HYUNDAI/KIA	54612-3S000		
KIA	96626331		
OPEL/VAUXHALL/CHEVROLET/HYUNDAI	96626331		

CA029

RENAULT	8200106131		
RENAULT	8200485734		
RENAULT	8200824774		

CA030

MERCEDES-BENZ	4153220184	NISSAN	54325-JE20C
NISSAN	54325-1KA0A	NISSAN	54325-JE21C
NISSAN	54325-3RA0A	NISSAN/RENAULT	54325-ED00A
NISSAN	54325-AX000	NISSAN/RENAULT	54325-ED02A
NISSAN	54325-JE20B	RENAULT	543250375R

CA031

VAUXHALL	4806308		

CA032

CITROEN/PEUGEOT	5035.57	HONDA	51726SFA005
CITROEN/PEUGEOT	5035C2	HYUNDAI	54612B9000
DAIHATSU/TOYOTA	48619000011	SUZUKI	4174158J00
HONDA	51726SAA003	TOYOTA	4830452040
HONDA	51726SAA013	TOYOTA	4830452050

CA033

OPEL	13500663	OPEL	20967947
OPEL	13500664	OPEL	22744295
OPEL	13503548	OPEL	22802090
OPEL	13503549	OPEL	22865931
OPEL	20859330	OPEL	22894950

CA034

GENERAL MOTORS	93253884		
OPEL	344505		
OPEL/VAUXHALL/GENERAL MOTORS	90121275		

CA035

RENAULT	543259539R		
SMART	4533210084		

CA037

FIAT	51755688	OPEL	344536
FIAT	51755689	OPEL	344537
OPEL	344529	OPEL	344538
OPEL	344530	OPEL	344665
OPEL	344533	SAAB	13178147

CA038

OPEL	312510		
OPEL/VAUXHALL/GENERAL MOTORS	90147276		

CA039

CITROEN/PEUGEOT	9800480380		

CA040

FIAT/JEEP	52017224		
FIAT/JEEP	52042666		

CA041

MERCEDES-BENZ	6399810525		
MERCEDES-BENZ	A6399810525		

CA042

MERCEDES-BENZ	A4473210083		

Coram®

by HPARTS
Automotive Solutions

GIUNTI OMOCINETICI AUTO E VEICOLI COMMERCIALI
Cv-joints for cars and commercial vehicles

ALFA

MODELLO MODEL	DIMENSIONI DIMENSIONS	ANNO YEAR	RIF ORIGINALE ORIGINAL REF	RIF CORAM CORAM REF	NOTE NOTES
145					
1.4 i.e. 16V T.S.	25x25x52	96-01	60812753	**CVJ005**	internal groove
1.6 i.e. 16V T.S.	25x25x52	96-01	60812753	**CVJ005**	internal groove
1.8 i.e. 16V T.S.	25x25x52	96-98	60812753	**CVJ005**	internal groove
1.9 TD	25x25x52	94-99	60812753	**CVJ005**	internal groove
2.0 16V T.S.	25x25x52	95-01	60812753	**CVJ005**	internal groove
146					
1.4 i.e. 16V T.S.	25x25x52	96-01	60812753	**CVJ005**	internal groove
1.6 i.e. 16V T.S.	25x25x52	96-01	60812753	**CVJ005**	internal groove
1.8 i.e. 16V T.S.	25x25x52	96-01	60812753	**CVJ005**	internal groove
1.9 TD	25x25x52	94-99	60812753	**CVJ005**	internal groove
2.0 16V T.S.	25x25x52	95-01	60812753	**CVJ005**	internal groove
155					
1.6 16V T.S.	25x25x52	96-98	60812753	**CVJ005**	internal groove

AUDI

MODELLO MODEL	DIMENSIONI DIMENSIONS	ANNO YEAR	RIF ORIGINALE ORIGINAL REF	RIF CORAM CORAM REF	NOTE NOTES
80					
1.6	33x30x53	86-91	895407311	**CVJ035**	
1.6 D	33x30x53	87-89	895407311	**CVJ035**	
1.6 TD - 1.8 S	33x30x53	86-91	895407311	**CVJ035**	
1.8	33x30x53	86-90	895407311	**CVJ035**	
1.9 D	33x30x53	89-91	895407311	**CVJ035**	
A3					
1.4 TFSI	36x30x59	07->	1K0 407 311 L	**CVJ029**	
1.6 - 1.6 FSI - 1.9 TDI - 2.0 FSI	36x30x59	03->	1K0 407 311 L	**CVJ029**	
1.8 - 1.8 T	36x30x53	96->	1H0 498 099 A	**CVJ028**	
1.9 TDI	36x60x53	96-01	1H0 498 099 A	**CVJ028**	
2.0 TDI 16V quattro - 2.0 TFSI quattro	36x30x59	04->	1K0 407 311 L	**CVJ029**	
2.0 TDI quattro	36x30x59	06->	1K0 407 311 L	**CVJ029**	
3.2 V6 quattro	36x30x59	03->	1K0 407 311 L	**CVJ029**	
S3 quattro	36x30x59	06->	1K0 407 311 L	**CVJ029**	
A3 Cabriolet					
1.6 - 1.6 TDI - 1.9 TDI	36x30x59	08->	1K0 407 311 L	**CVJ029**	

follow AUDI

MODELLO MODEL	DIMENSIONI DIMENSIONS	ANNO YEAR	RIF ORIGINALE ORIGINAL REF	RIF CORAM CORAM REF	NOTE NOTES
A3 Sportback					
1.4 TFSI	36x30x59	07->	1K0 407 311 L	**CVJ029**	
1.6 - 1.6 FSI - 1.9 TDI - 2.0 FSI - 2.0 TFSI quattro	36x30x59	04->	1K0 407 311 L	**CVJ029**	
2.0 TDI quattro	36x30x59	06->	1K0 407 311 L	**CVJ029**	
2.0 TDI 16V quattro	36x30x59	05->	1K0 407 311 L	**CVJ029**	
3.2 V6 quattro	36x30x59	04->	1K0 407 311 L	**CVJ029**	
AUDI 80-90					
1.3 - 1.6 - 1.8	22x30x51	80-87	171 407 311 K	**CVJ021**	
1.6 D - 1.6 TD	22x30x51	80-91	171 407 311 K	**CVJ021**	
1.9 - 1.9 CD	22x30x51	81-83	171 407 311 K	**CVJ021**	
2.2	22x30x51	80-82	171 407 311 K	**CVJ021**	
TT					
1.8 T	36x30x53	98-06	1H0 498 099 A	**CVJ028**	
1.8 T Roadster	36x30x53	98-06	1H0 498 099 A	**CVJ028**	

DAEWOO

MODELLO MODEL	DIMENSIONI DIMENSIONS	ANNO YEAR	RIF ORIGINALE ORIGINAL REF	RIF CORAM CORAM REF	NOTE NOTES
LANOS (KLAT)					
1.4 - 1.5	22x29x52	97->	96257803	**CVJ016**	
1.6 16V	33x29x52	97->	96256954	**CVJ017**	
LANOS Tre Volumi					
1.4 - 1.5	22x29x52	97->	96257803	**CVJ016**	
1.6 16V	33x29x52	97->	96256954	**CVJ017**	
NUBIRA (KLAJ)					
1.6 16V - 2.0 16V	33x29x52	97->	96256954	**CVJ017**	
NUBIRA Tre Volumi					
1.6 16V - 2.0 16V	33x29x52	97->	96256954	**CVJ017**	
NUBIRA Wagon					
1.6 16V - 2.0 16V	33x29x52	97->	96256954	**CVJ017**	

FIAT					
MODELLO MODEL	**DIMENSIONI DIMENSIONS**	**ANNO YEAR**	**RIF ORIGINALE ORIGINAL REF**	**RIF CORAM CORAM REF**	**NOTE NOTES**
127					
1.0	20x20x43,1	71-80	40871120	**CVJ001**	
1.0	22x20x48	80-87	4390952	**CVJ002**	
1.3 D	22x20x48	81-87	4390952	**CVJ002**	
128					
1.1 - 1.3	20x20x43,1	69-80	4247399	**CVJ001**	
1.1 - 1.3	22x20x48	81-82	4475837	**CVJ002**	
1.1 -1.3 / COUPE	22x20x48	81-82	4475837	**CVJ002**	
1.1 -1.3 / COUPE	20x20x43,1	69-80	4247399	**CVJ001**	
1.1 -1.3 / PANORAMA	20x20x43,1	69-80	4247399	**CVJ001**	
1.1 -1.3 / PANORAMA	22x20x48	81-82	4475837	**CVJ002**	
147 (BRASILE)					
1.0 - 1.3	20x20x43,1	76->	4247399	**CVJ001**	
BRAVO/BRAVA					
1.4 12v - 1.6 - 1.9 Diesel	22x20x46	95->	7659169	**CVJ003**	
1.9 TD 100 S (182.BF)	25x25x52	96-01	46307032	**CVJ005**	internal groove
1.9 TD 75 S (182.BF)	25x25x52	96-01	46307032	**CVJ005**	internal groove
DOBLO'					
1.9 JTD	25x24x51		7084108	**CVJ008**	
FIORINO					
1.1 - 1.3 - 1.5	20x20x43,1	88->	4247399	**CVJ001**	
1.7 65 Furgonato	22x22x52	97-01	46307122	**CVJ007**	
1.7 Diesel (60)	22x20x48	88->	4475837	**CVJ002**	
1.7 TD Pick up (146)	22x22x52	97-01	46307122	**CVJ007**	
MAREA					
1.8 115 16V	25x25x52	96->	46307032	**CVJ005**	internal groove
1.9 TD 75	25x25x52	96->	46307032	**CVJ005**	internal groove
1.9 TD 100	25x25x52	96->	46307032	**CVJ005**	internal groove
2.0 150 20V	25x25x52	96-99	46307032	**CVJ005**	internal groove

follow FIAT

MODELLO MODEL	DIMENSIONI DIMENSIONS	ANNO YEAR	RIF ORIGINALE ORIGINAL REF	RIF CORAM CORAM REF	NOTE NOTES
MAREA Weekend					
1.8 115 16V	25x25x52	96->	46307032	**CVJ005**	internal groove
1.9 TD 100 - 1.9 TD 75	25x25x52	96->	46307032	**CVJ005**	internal groove
2.0 150 20V	25x25x52	96-99	49307032	**CVJ005**	internal groove
PALIO					
1.5 (178BX)	22x22X52	96-98	46307122	**CVJ007**	
1.6 16V (178BX)	22x22x52	96->	46307122	**CVJ007**	
1.8	25x24x51		7084108	**CVJ008**	
1.9 JTD	25x24x51		7084108	**CVJ008**	
PALIO Weekend					
1.6 TD (178DX.D1A)	22x22x52	96-01	46307122	**CVJ007**	
1.7 TD (178DX.H1A)	22x22x52	96-01	46307122	**CVJ007**	
PANDA					
Tutti i modelli - All types	20x20x43,1	80->	4247399	**CVJ001**	
PUNTO					
1.4 GT Turbo	25x25x52	94-96	46307032	**CVJ005**	internal groove
1.7 TD	25x25x52	94-99	46307032	**CVJ005**	internal groove
PUNTO (I SERIE)					
1.1 - 1.2 - 1.6	22x20x46	93->	7659169	**CVJ003**	
PUNTO Van					
1.7 TD	25x25x52	96-00	46307032	**CVJ005**	internal groove
REGATA					
1.3	22x20x48	83-90	4475837	**CVJ002**	
1.7 Diesel	22x20x48	83-90	4475837	**CVJ002**	
1.9 Diesel	22x20x48	83-90	4475837	**CVJ002**	
RITMO					
1.1 -1.3	22x20x48	78-87	4475837	**CVJ002**	
1.5	22x20x48	80-87	4475837	**CVJ002**	
1.7 Diesel	22x20x48	80-87	4475837	**CVJ002**	

follow FIAT

MODELLO MODEL	DIMENSIONI DIMENSIONS	ANNO YEAR	RIF ORIGINALE ORIGINAL REF	RIF CORAM CORAM REF	NOTE NOTES
SIENA					
1.2	22x22x52	98->	46307122	**CVJ007**	
1.4 - 1.4 Cat.	22x22x52	96->	46307122	**CVJ007**	
1.6 16V	22x22x52	98->	46307122	**CVJ007**	
SPAZIO (BRASILE)					
1.0 - 1.3	20x20x43,1	83-84	4247399	**CVJ001**	
STRADA					
1.9 JTD	25x24x51		7084108	**CVJ008**	
TEMPRA					
1.4 - 1.6	22x20x46	90->	7659169	**CVJ003**	
1.8 - 2.0	25x25x52	90->	82413699	**CVJ004**	
1.9 Diesel	22x20x46	90->	7659169	**CVJ003**	
TIPO					
1.1 - 1.4 - 1.6	22x20x46	88-90	7659169	**CVJ003**	
1.7 - 1.9 Diesel	22x20x46	88-90	7659169	**CVJ003**	
1.7 - 1.9 Diesel ABS	25x25x52	88-90	82449123	**CVJ004**	
1.9 Turbo Diesel ABS	25x25x52	88->	82449123	**CVJ004**	
UNO					
0.9 - 1.1 - 1.3 - 1.5	20x20x43,1	83->	5998706	**CVJ001**	
1.0	20x20x43,1	85->	5998706	**CVJ001**	
1.3 Diesel	20x20x43,1	83->	5998706	**CVJ001**	
1.3 Turbo Diesel - 1.7 Diesel	22x20x48	86->	7656786	**CVJ002**	

HYUNDAI

MODELLO MODEL	DIMENSIONI DIMENSIONS	ANNO YEAR	RIF ORIGINALE ORIGINAL REF	RIF CORAM CORAM REF	NOTE NOTES
LANTRA I					
1.5 i.e.	25x22x50	90-95	MB176160	**CVJ025**	
PONY					
1.3	25x22x50	85-89	MB176160	**CVJ025**	

follow HYUNDAI

MODELLO MODEL	DIMENSIONI DIMENSIONS	ANNO YEAR	RIF ORIGINALE ORIGINAL REF	RIF CORAM CORAM REF	NOTE NOTES
S COUPE					
1.5 i	25x22x50	90-96	49507-21000	**CVJ025**	

KIA

MODELLO MODEL	DIMENSIONI DIMENSIONS	ANNO YEAR	RIF ORIGINALE ORIGINAL REF	RIF CORAM CORAM REF	NOTE NOTES
FESTIVA					
1.3	24x20x52	90-93	B00525400	**CVJ023**	
PRIDE					
1.1 i	24x19x52	91->	B00225500	**CVJ024**	
1.3 i	24x19x52	90->	B00225500	**CVJ024**	

LADA

MODELLO MODEL	DIMENSIONI DIMENSIONS	ANNO YEAR	RIF ORIGINALE ORIGINAL REF	RIF CORAM CORAM REF	NOTE NOTES
CLASSIC					
Tutti i tipi/All types/Tous types	22x22x46		2108-2215011	**CVJ011**	
PRIORA					
Tutti i tipi/All types/Tous types	22x22x50		2170-2215012	**CVJ013**	
SAMARA					
(GIUNTO INTERNO - INNER C-V JOINT) 2108 - 2109	24x22x35			**CVJ012**	
1.1 40 kW (55HP)	22x22x50	86->	2108-2215010	**CVJ010**	
1.3 48 kW (65HP)	22x22x50	86->	2108-2215010	**CVJ010**	
1.5 55 kW (75HP)	22x22x50	86->	2108-2215010	**CVJ010**	

MARUTI SUZUKI

MODELLO MODEL	DIMENSIONI DIMENSIONS	ANNO YEAR	RIF ORIGINALE ORIGINAL REF	RIF CORAM CORAM REF	NOTE NOTES
800					
0.8	23x18x44	91-06	44101-84150	**CVJ033**	
0.8	23x19x49	91-06	44102-60B12	**CVJ034**	

MAZDA

MODELLO MODEL	DIMENSIONI DIMENSIONS	ANNO YEAR	RIF ORIGINALE ORIGINAL REF	RIF CORAM CORAM REF	NOTE NOTES
121 I					
1.1	24x19x52	87-90	B00225600	**CVJ024**	
121 II					
1.3 16V	24x19x52	90-96	B00225600	**CVJ024**	

MITSUBISHI

MODELLO MODEL	DIMENSIONI DIMENSIONS	ANNO YEAR	RIF ORIGINALE ORIGINAL REF	RIF CORAM CORAM REF	NOTE NOTES
COLT I					
1.2 GL	25x22x50	78-84	MB526898	**CVJ025**	
1.4 GLX,GT	25x22x50	79-84	MB526898	**CVJ025**	
1.4 Turbo	25x22x50	81-84	MB526898	**CVJ025**	
COLT II					
1.6 Turbo Eci	25x22x50	84-88	MB176160	**CVJ025**	
COLT III					
1.3 - 1.3 12V	25x22x50	88-92	MB526898	**CVJ025**	
1.3 GL	25x22x50	88-90	MB526898	**CVJ025**	
1.5 Cat.	25x22x50	90-92	MB526898	**CVJ025**	
1.5 GLXi	25x22x50	88-92	MB526898	**CVJ025**	
CORDIA					
1.6 GSL	25x22x50	82-86	MB526898	**CVJ025**	
GALANT III					
1.6 GLX	25x22x50	84-87	MB526898	**CVJ025**	
LANCER F II					
1.2 GLX - 1.4 GLX	25x22x50	83-84	MB526898	**CVJ025**	
LANCER I					
1.4 GLX	25x22x50	79-83	MB526898	**CVJ025**	

follow MITSUBISHI

MODELLO MODEL	DIMENSIONI DIMENSIONS	ANNO YEAR	RIF ORIGINALE ORIGINAL REF	RIF CORAM CORAM REF	NOTE NOTES
LANCER III					
1.5 GLX	25x22x50	83-88	MB526898	**CVJ025**	
LANCER III Station W.					
1.8 4x4	25x22x50	87-92	MB526898	**CVJ025**	
LANCER IV					
1.3 12V	25x22x50	92-94	MB526898	**CVJ025**	
1.5	25x22x50	88-92	MB526898	**CVJ025**	
1.5 12V	25x22x50	89-92	MB526898	**CVJ025**	
1.8 4x4	25x22x50	89-92	MB526898	**CVJ025**	
LANCER IV Tre volumi					
1.3 - 1.5	25x22x50	88-92	MB526898	**CVJ025**	
1.5 12V	25x22x50	89-92	MB526898	**CVJ025**	
SPACE WAGON					
1.8 4x4	25x22x50	91-98	MB526898	**CVJ025**	
1.8 GLX	25x22x50	84-88	MB526898	**CVJ025**	
TREDIA					
1.4 GLX	25x22x50	82-85	MB526898	**CVJ025**	
GLS 1.6	25x22x50	82-87	MB526898	**CVJ025**	
GLS 1.6	25x22x50	82-87	MB526898	**CVJ025**	

OPEL

MODELLO MODEL	DIMENSIONI DIMENSIONS	ANNO YEAR	RIF ORIGINALE ORIGINAL REF	RIF CORAM CORAM REF	NOTE NOTES
ASTRA F					
1.7 D - 1.7 TDS	33x25x52	92-98	90498412	**CVJ032**	
1.7 TD	33x25x52	94-98	90498412	**CVJ032**	
1.8 i	33x25x52	92-98	90498412	**CVJ032**	
1.8 i 16V	33x25x52	93-98	90498412	**CVJ032**	
2.0 i - 2.0 i 16V	33x25x52	92-98	90498412	**CVJ032**	

follow OPEL

MODELLO MODEL	DIMENSIONI DIMENSIONS	ANNO YEAR	RIF ORIGINALE ORIGINAL REF	RIF CORAM CORAM REF	NOTE NOTES
ASTRA F 2 volumi					
1.7 D - 1.7 TDS	33x25x52	91-98	90498412	**CVJ032**	
1.7 TD	33x25x52	94-98	90498412	**CVJ032**	
1.8 i	33x25x52	91-98	90498412	**CVJ032**	
1.8 i 16V	33x25x52	93-98	90498412	**CVJ032**	
2.0 GSI 16V - 2.0 i	33x25x52	91-98	90498412	**CVJ032**	
2.0 i 16V	33x25x52	95-98	90498412	**CVJ032**	
ASTRA F Cabriolet					
1.8 I 16V	33x25x52	94-01	90498412	**CVJ032**	
2.0 i	33x25x52	93-94	90498412	**CVJ032**	
ASTRA F CLASSIC					
Tre volumi 1.6 i	33x25x52	98-02	374262	**CVJ032**	
ASTRA F Station W.					
1.7 D - 1.7 TDS	33x25x52	91-98	90498412	**CVJ032**	
1.7 TD	33x25x52	94-98	90498412	**CVJ032**	
1.8 i	33x25x52	91-98	90498412	**CVJ032**	
1.8 i 16V	33x25x52	93-98	90498412	**CVJ032**	
2.0 i	33x25x52	91-94	90498412	**CVJ032**	
2.0 i 16V	33x25x52	93-98	90498412	**CVJ032**	
ASTRA F Van					
1.6 i	33x25x52	93-96	374262	**CVJ032**	
1.7 D	33x25x52	91-99	90498412	**CVJ032**	
1.7 TD	33x25x52	94-99	90498412	**CVJ032**	
ASTRA G 2 volumi					
1.8 16V	33x25x52	98-00	90498412	**CVJ032**	
2.0 16V	33x25x52	98-05	90498412	**CVJ032**	
2.0 16V OPC	33x25x52	99-02	90498412	**CVJ032**	
2.0 DI	33x25x52	98-05	90498412	**CVJ032**	
ASTRA G Coupé					
1.8 16V	33x25x52	00-00	90498412	**CVJ032**	

follow OPEL

MODELLO MODEL	DIMENSIONI DIMENSIONS	ANNO YEAR	RIF ORIGINALE ORIGINAL REF	RIF CORAM CORAM REF	NOTE NOTES
ASTRA G Furgonato					
1.7 DTI 16V	33x25x52	00-05	374262	**CVJ032**	
2.0 DI	33x25x52	99-05	374262	**CVJ032**	
ASTRA G Station W.					
1.8 16V	33x25x52	98-00	90498412	**CVJ032**	
2.0 16V - 2.0 DI	33x25x52	98-04	90498412	**CVJ032**	
ASTRA G Tre volumi					
1.8 16V	33x25x52	98-00	90498412	**CVJ032**	
2.0 16V - 2.0 DI	33x25x52	98-05	90498412	**CVJ032**	
CALIBRA A					
2.0 i - 2.0 i 16V - 2.0 i 16V 4x4 - 2.0 i 4x4	33x25x52	90-97	90498412	**CVJ032**	
2.0 i Turbo 4x4	33x25x52	92-97	90498412	**CVJ032**	
KADETT E					
1.5 TD	33x25x52	88-91	90498412	**CVJ032**	
1.6 D	33x25x52	84-89	90498412	**CVJ032**	
1.7 D	33x25x52	89-91	90498412	**CVJ032**	
1.8	33x25x52	87-90	90498412	**CVJ032**	
1.8 i	33x25x52	84-91	90498412	**CVJ032**	
1.8 S	33x25x52	84-91	90498412	**CVJ032**	
2.0 i - 2.0 i Cat.	33x25x52	87-91	90498412	**CVJ032**	
KADETT E 2 volumi					
1.5 TD	33x25x52	88-91	90498412	**CVJ032**	
1.6 D	33x25x52	84-89	90498412	**CVJ032**	
1.7 D	33x25x52	89-91	90498412	**CVJ032**	
1.8 E	33x25x52	85-89	90498412	**CVJ032**	
1.8 GSI	33x25x52	84-86	90498412	**CVJ032**	
1.8 i	33x25x52	85-91	90498412	**CVJ032**	
1.8 S	33x25x52	87-91	90498412	**CVJ032**	
2.0 GSI	33x25x52	86-91	90498412	**CVJ032**	
2.0 GSI 16V	33x25x52	87-91	90498412	**CVJ032**	
2.0 GSI 16V Cat.	33x25x52	88-91	90498412	**CVJ032**	
2.0 GSI Cat.	33x25x52	86-91	90498412	**CVJ032**	

follow OPEL

MODELLO MODEL	DIMENSIONI DIMENSIONS	ANNO YEAR	RIF ORIGINALE ORIGINAL REF	RIF CORAM CORAM REF	NOTE NOTES
KADETT E Cabriolet					
2.0 i	33x25x52	86-93	90498412	**CVJ032**	
2.0 i Cat.	33x25x52	86-93	90498412	**CVJ032**	
KADETT E Combo					
1.6 D	33x25x52	86-89	90498412	**CVJ032**	
1.7 D	33x25x52	89-94	90498412	**CVJ032**	
KADETT E Furgonato					
1.6 D	33x25x52	84-88	90498412	**CVJ032**	
1.7 D	33x25x52	88-92	90498412	**CVJ032**	
1.8 i	33x25x52	84-92	90498412	**CVJ032**	
KADETT E Station W.					
1.5 TD	33x25x52	88-91	90498412	**CVJ032**	
1.6 D	33x25x52	84-89	90498412	**CVJ032**	
1.7 D	33x25x52	89-91	90498412	**CVJ032**	
1.8 E	33x25x52	85-86	90498412	**CVJ032**	
1.8 i	33x25x52	84-91	90498412	**CVJ032**	
1.8 S	33x25x52	87-91	90498412	**CVJ032**	
2.0 i - 2.0 i Cat.	33x25x52	87-91	90498412	**CVJ032**	

follow OPEL

MODELLO MODEL	DIMENSIONI DIMENSIONS	ANNO YEAR	RIF ORIGINALE ORIGINAL REF	RIF CORAM CORAM REF	NOTE NOTES
VECTRA A					
1.6 i Cat. - 1.7 D	33x25x52	88-95	90498412	**CVJ032**	
1.7 D	33x25x52	88-95	90498412	**CVJ032**	
1.7 TD	33x25x52	90-95	90498412	**CVJ032**	
1.7 TD - 1.8 i Cat.	33x25x52	90-95	90498412	**CVJ032**	
1.8 i	33x25x52	88-90	90498412	**CVJ032**	
1.8 i Cat.	33x25x52	90-95	90498412	**CVJ032**	
1.8 S	33x25x52	88-89	90498412	**CVJ032**	
1.8 S	33x25x52	88-90	90498412	**CVJ032**	
1.8 S 4x4	33x25x52	89-89	90498412	**CVJ032**	
2.0 i	33x25x52	88-92	90498412	**CVJ032**	
2.0 i	33x25x52	88-90	90498412	**CVJ032**	
2.0 i 16V	33x25x52	89-95	90498412	**CVJ032**	
2.0 i 16V	33x25x52	94-95	90498412	**CVJ032**	
2.0 i 16V 4x4	33x25x52	94-95	90498412	**CVJ032**	
2.0 i 16V Cat.	33x25x52	90-95	90498412	**CVJ032**	
2.0 i 4x4	33x25x52	89-92	90498412	**CVJ032**	
2.0 i 4x4 Cat.	33x25x52	89-95	90498412	**CVJ032**	
2.0 i Cat.	33x25x52	88-95	90498412	**CVJ032**	
2.0 i Cat. - 2.0 i GT	33x25x52	88-95	90498412	**CVJ032**	
2.0 i Turbo 4x4	33x25x52	94-95	90498412	**CVJ032**	
2.5 V6	33x25x52	93-95	90498412	**CVJ032**	
2.5 V6	33x25x52	93-95	90498412	**CVJ032**	
2000 16V 4x4	33x25x52	89-90	90498412	**CVJ032**	
2000/GT 16V	33x25x52	89-94	90498412	**CVJ032**	
2000/GT 16V 4x4 Cat. - 2000/GT 16V Cat.	33x25x52	90-95	90498412	**CVJ032**	
VECTRA B					
1.7 TD	33x25x52	95-98	374262	**CVJ032**	
1.8 i 16V	33x25x52	95-02	374262	**CVJ032**	
2.0 DI 16V	33x25x52	96-02	374262	**CVJ032**	
2.0 DTI 16V	33x25x52	97-02	374262	**CVJ032**	
2.0 i 16V	33x25x52	95-00	374262	**CVJ032**	
2.2 i 16V	33x25x52	00-02	374262	**CVJ032**	
2.5 i V6	33x25x52	95-00	374262	**CVJ032**	
i 500 2.5	33x25x52	98-00	374262	**CVJ032**	

follow OPEL

MODELLO MODEL	DIMENSIONI DIMENSIONS	ANNO YEAR	RIF ORIGINALE ORIGINAL REF	RIF CORAM CORAM REF	NOTE NOTES
VECTRA B 2 volumi					
1.7 TD	33x25x52	95-98	374262	**CVJ032**	
1.8 i 16V	33x25x52	95-03	374262	**CVJ032**	
2.0 DI 16V	33x25x52	96-00	374262	**CVJ032**	
2.0 DTI 16V	33x25x52	97-03	374262	**CVJ032**	
2.0 i 16V	33x25x52	95-00	374262	**CVJ032**	
2.2 i 16V	33x25x52	00-03	374262	**CVJ032**	
2.5 i V6	33x25x52	95-00	374262	**CVJ032**	
VECTRA B Station W.					
1.7 TD	33x25x52	96-97	374262	**CVJ032**	
1.8 i 16V	33x25x52	96-03	374262	**CVJ032**	
2.0 DI 16V	33x25x52	96-00	374262	**CVJ032**	
2.0 DTI 16V	33x25x52	97-03	374262	**CVJ032**	
2.0 i 16V	33x25x52	96-00	374262	**CVJ032**	
2.2 i 16V	33x25x52	00-03	374262	**CVJ032**	
2.5 i V6	33x25x52	96-00	374262	**CVJ032**	
i 500 2.5	33x25x52	98-00	374262	**CVJ032**	
ZAFIRA A					
1.6 16V - 1.8 16V	33x25x52	99-05	90498412	**CVJ032**	
2.0 DI 16V	33x25x52	99-05	90498412	**CVJ032**	
2.0 DTI	33x25x52	03-05	90498412	**CVJ032**	
2.0 DTI 16V	33x25x52	00-05	90498412	**CVJ032**	

SEAT

MODELLO MODEL	DIMENSIONI DIMENSIONS	ANNO YEAR	RIF ORIGINALE ORIGINAL REF	RIF CORAM CORAM REF	NOTE NOTES
ALTEA					
1.6 - 1.9 TDI	36x30x59	04->	1K0 498 099 X	**CVJ029**	
2.0 FSI	36x30x59	04-09	1K0 498 099 X	**CVJ029**	
ALTEA XL					
1.6	36x30x59	06->	1K0 498 099 X	**CVJ029**	

follow SEAT

MODELLO MODEL	DIMENSIONI DIMENSIONS	ANNO YEAR	RIF ORIGINALE ORIGINAL REF	RIF CORAM CORAM REF	NOTE NOTES
CORDOBA					
1.4 i	22x30x51	94-99	171407311F	**CVJ021**	
1.6 i	22x30x51	93-99	171407311F	**CVJ021**	
1.9 Diesel	22x30x51	93-96	171407311F	**CVJ021**	
1.9 SDI	22x30x51	96-99	171407311F	**CVJ021**	
2.0 i 16V	36x30x53	96-99	357 498 099 E	**CVJ028**	
CORDOBA Vario					
1.4 i	22x30x51	96-99	171407311F	**CVJ021**	
1.6 i	22x30x51	96-99	171407311F	**CVJ021**	
1.9 SDI	22x30x51	96-99	171407311F	**CVJ021**	
IBIZA II					
1.0	22x30x51	93-96	171407311F	**CVJ021**	
1.3 i	22x30x51	93-96	171407311F	**CVJ021**	
1.4 i - 1.6 i	22x30x51	93-99	171407311F	**CVJ021**	
1.9 Diesel	22x30x51	93-96	171407311F	**CVJ021**	
INCA					
1.4 i - 1.6 i - 1.9 Diesel - 1.9 SDI	22x30x51	95->	171407311F	**CVJ021**	
LEON					
1.4 16V	36x30x59	06->	1K0 498 099 X	**CVJ029**	
1.4 TSI	36x30x59	07->	1K0 498 099 X	**CVJ029**	
1.6	36x30x53	99-06	357 498 099 E	**CVJ028**	
1.6	36x30x59	05->	1K0 498 099 X	**CVJ029**	
1.6 16V	36x30x53	00-06	357 498 099 E	**CVJ028**	
1.8 20V	36x30x53	99-06	357 498 099 E	**CVJ028**	
1.9 TDI	36x30x53	99-06	357 498 099 E	**CVJ028**	
1.9 TDI - 2.0 FSI	36x30x59	05-10	1K0 498 099 X	**CVJ029**	
TOLEDO					
1.6 i	22x30x51	96-99	171407311F	**CVJ021**	
1.9 Diesel	22x30x51	91-99	171407311F	**CVJ021**	
TOLEDO I					
2.0 i 16V	36x30x53	93-99	357 498 099 E	**CVJ028**	

follow SEAT

MODELLO MODEL	DIMENSIONI DIMENSIONS	ANNO YEAR	RIF ORIGINALE ORIGINAL REF	RIF CORAM CORAM REF	NOTE NOTES
TOLEDO II					
1.6 16V	36x30x53	00-06	357 498 099 E	**CVJ028**	
1.8 20V - 1.9 TDI	36x30x53	99-06	357 498 099 E	**CVJ028**	
2.3 V5 20V	36x30x53	01-06	357 498 099 E	**CVJ028**	
TOLEDO III					
1.6 - 1.9 TDI - 2.0 FSI	36x30x59	04-09	1K0 498 099 X	**CVJ029**	
1.8 TFSI	36x30x59	07-09	1K0 498 099 X	**CVJ029**	

SKODA

MODELLO MODEL	DIMENSIONI DIMENSIONS	ANNO YEAR	RIF ORIGINALE ORIGINAL REF	RIF CORAM CORAM REF	NOTE NOTES
FAVORIT					
1.3	22x22x45	94-94	115.420.170	**CVJ027**	
1.3 135	22x22x45	90-94	115.420.170	**CVJ027**	
1.3 135 X,LX,GLX	22x22x45	90-94	115.420.170	**CVJ027**	
1.3 136	22x22x45	90-94	115.420.170	**CVJ027**	
FAVORIT Forman					
1.3	22x22x45	94-95	115.420.170	**CVJ027**	
1.3 (135 E, 135, 136)	22x22x45	91-95	115.420.170	**CVJ027**	
FAVORIT Pick-up					
1.3	22x22x45	92-97	115.420.170	**CVJ027**	
FELICIA I					
1.3	22x22x45	94-98	115.420.170	**CVJ027**	
1.6 LX - 1.9 D	22x22x45	95-98	115.420.170	**CVJ027**	
FELICIA I Fun					
1.3 - 1.6 - 1.9 D	22x22x45	97->	115.420.170	**CVJ027**	
FELICIA I Pick-up					
1.3 - 1.6 - 1.9 D	22x22x45	95->	115.420.214	**CVJ027**	
FELICIA I Station W.					
1.3 - 1.3 LX - 1.3 LXI - 1.9 D	22x22x45	95-98	115.420.170	**CVJ027**	

follow SKODA

MODELLO MODEL	DIMENSIONI DIMENSIONS	ANNO YEAR	RIF ORIGINALE ORIGINAL REF	RIF CORAM CORAM REF	NOTE NOTES
FELICIA II					
1.3 - 1.6 - 1.9 D	22x22x45	98-01	115.420.170	**CVJ027**	
FELICIA II Station W.					
1.3 - 1.6 - 1.9 D	22x22x45	98-01	115.420.170	**CVJ027**	
OCTAVIA					
1.4 TSI	36x30x59	08->	1K0 498 099 A	**CVJ029**	
1.6	36x30x53	97-10	357 498 099 EX	**CVJ028**	
1.6	36x30x59	04->	1K0 498 099 A	**CVJ029**	
1.6 FSI	36x30x59	04-08	1K0 498 099 A	**CVJ029**	
1.8	36x30x53	96-00	357 498 099 EX	**CVJ028**	
1.8 T	36x30x53	97-10	357 498 099 EX	**CVJ028**	
1.8 T 4x4	36x30x53	01-06	357 498 099 EX	**CVJ028**	
1.9 TDI	36x30x53	96-10	357 498 099 EX	**CVJ028**	
1.9 TDI	36x30x59	04-10	1K0 498 099 A	**CVJ029**	
2.0	36x30x53	99-07	357 498 099 EX	**CVJ028**	
2.0 FSI	36x30x59	04->	1K0 498 099 A	**CVJ029**	
2.0 TDI RS	36x30x59	06->	1K0 498 099 A	**CVJ029**	
RS 1.8 T	36x30x53	01-06	357 498 099 EX	**CVJ028**	
OCTAVIA Combi					
1.4 TSI	36x30x59	08->	1K0 498 099 A	**CVJ029**	
1.6	36x30x59	04->	1K0 498 099 A	**CVJ029**	
1.6 - 1.8 T	36x30x53	98-10	357 498 099 EX	**CVJ028**	
1.6 FSI	36x30x59	04-08	1K0 498 099 A	**CVJ029**	
1.8 T 4x4	36x30x53	01-06	357 498 099 EX	**CVJ028**	
1.9 TDI	36x30x53	98-10	357 498 099 EX	**CVJ028**	
1.9 TDI - 1.9 TDI 4x4	36x30x59	04-10	1K0 498 099 A	**CVJ029**	
2.0	36x30x53	99-07	357 498 099 EX	**CVJ028**	
2.0 4x4	36x30x53	00-04	357 498 099 EX	**CVJ028**	
2.0 FSI - 2.0 FSI 4x4	36x30x59	04->	1K0 498 099 A	**CVJ029**	
2.0 TDI 4x4 - 2.0 TDI RS	36x30x59	06->	1K0 498 099 A	**CVJ029**	
RS 1.8 T	36x30x53	02-06	357 498 099 EX	**CVJ028**	
SUPERB					
1.4 TSI - 1.9 TDI	36x30x59	08->	1K0 498 099 A	**CVJ029**	

SUZUKI

MODELLO MODEL	DIMENSIONI DIMENSIONS	ANNO YEAR	RIF ORIGINALE ORIGINAL REF	RIF CORAM CORAM REF	NOTE NOTES
ALTO					
0.8	23x18x44	86-88	44101-84331	**CVJ033**	
1.0	23x19x49	94-98	44102-60B12	**CVJ034**	
1.0	23x19x49	00-02	44102-60B12	**CVJ034**	
CAPPUCINO					
0.7	23x19x49	92-95	44102-60B12	**CVJ034**	
SWIFT Cabriolet					
1.3 i	23x19x49	91-96	44102-60B12	**CVJ034**	
SWIFT II 2 volumi					
1.0	23x19x49	89-01	44102-60B12	**CVJ034**	
1.0 i	23x19x49	89-05	44102-60B12	**CVJ034**	
1.3 - 1.3 4WD - 1.3 GTi	23x19x49	89-01	44102-60B12	**CVJ034**	
SWIFT II Tre volumi					
1.3	23x19x49	89-01	44102-60B12	**CVJ034**	

VOLKSWAGEN

MODELLO MODEL	DIMENSIONI DIMENSIONS	ANNO YEAR	RIF ORIGINALE ORIGINAL REF	RIF CORAM CORAM REF	NOTE NOTES
BORA					
1.4 16V	36x30x53	00-05	357 498 099 EV	**CVJ028**	
1.6 - 1.6 16V - 1.8	36x30x53	98-05	357 498 099 EV	**CVJ028**	
1.8 4motion	36x30x53	99-05	357 498 099 EV	**CVJ028**	
1.8 T	36x30x53	00-05	357 498 099 EV	**CVJ028**	
1.9 SDI - 1.9 TDI	36x30x53	98-05	357 498 099 EV	**CVJ028**	
1.9 TDI 4motion	36x30x53	99-01	357 498 099 EV	**CVJ028**	
2.0	36x30x53	98-05	357 498 099 EV	**CVJ028**	
2.0 4motion	36x30x53	00-05	357 498 099 EV	**CVJ028**	
2.3 V5	36x30x53	98-05	357 498 099 EV	**CVJ028**	

follow VOLKSWAGEN

MODELLO MODEL	DIMENSIONI DIMENSIONS	ANNO YEAR	RIF ORIGINALE ORIGINAL REF	RIF CORAM CORAM REF	NOTE NOTES
BORA Station wagon					
1.4 16V	36x30x53	01-05	357 498 099 EV	**CVJ028**	
1.6	36x30x53	99-05	357 498 099 EV	**CVJ028**	
1.6 16V	36x30x53	00-05	357 498 099 EV	**CVJ028**	
1.8 4motion	36x30x53	99-05	357 498 099 EV	**CVJ028**	
1.8 T	36x30x53	00-05	357 498 099 EV	**CVJ028**	
1.9 TDI	36x30x53	99-05	357 498 099 EV	**CVJ028**	
2.0	36x30x53	99-05	357 498 099 EV	**CVJ028**	
2.0 4motion	36x30x53	00-05	357 498 099 EV	**CVJ028**	
2.3 V5	36x30x53	99-05	357 498 099 EV	**CVJ028**	
CADDY					
1.5 - 1.8	22x30x51	82-92	171 407 311 K	**CVJ021**	
CADDY I					
1.5	22x30x51	82-83	171 407 311 K	**CVJ021**	
1.6	22x30x51	83-92	171 407 311 K	**CVJ021**	
1.6 Diesel	22x30x51	82-92	171 407 311 K	**CVJ021**	
1.8	22x30x51	85-92	171 407 311 K	**CVJ021**	
CADDY II Pick-up					
1.6 - 1.9 D	22x22x45	96-00	115.420.217	**CVJ027**	
CADDY III Furgonato					
1.4	36x30x59	04-06	1K0 498 099 AX	**CVJ029**	
1.4 16V	36x30x59	06-10	1K0 498 099 AX	**CVJ029**	
1.6	36x30x59	04->	1K0 498 099 AX	**CVJ029**	
2.0 EcoFuel	36x30x59	06->	1K0 498 099 AX	**CVJ029**	
2.0 SDI	36x30x59	04-10	1K0 498 099 AX	**CVJ029**	
CADDY III Station W.					
1.4	36x30x59	04-06	1K0 498 099 AX	**CVJ029**	
1.4 16V	36x30x59	06-10	1K0 498 099 AX	**CVJ029**	
1.6	36x30x59	04->	1K0 498 099 AX	**CVJ029**	
2.0 EcoFuel	36x30x59	06->	1K0 498 099 AX	**CVJ029**	
2.0 SDI	36x30x59	04-10	1K0 498 099 AX	**CVJ029**	
CARAT					
TT	22x30x51	84->	171 407 311 K	**CVJ021**	

follow VOLKSWAGEN

MODELLO MODEL	DIMENSIONI DIMENSIONS	ANNO YEAR	RIF ORIGINALE ORIGINAL REF	RIF CORAM CORAM REF	NOTE NOTES
CORRADO					
2.9 VR6	36x30x53	91-95	357 498 099 EV	**CVJ028**	
EOS					
1.4 TSI	36x30x59	07->	1K0 498 099 AX	**CVJ029**	
1.6 FSI - 2.0 FSI	36x30x59	06-08	1K0 498 099 AX	**CVJ029**	
FOX					
TT	22x30x51	87->	171 407 311 K	**CVJ021**	
GOLF I					
1.6 Cabriolet	22x30x51	79-90	171 407 311 K	**CVJ021**	
1.8 Cabriolet	22x30x51	82-93	171 407 311 K	**CVJ021**	
GOLF II - III					
1.0 - 1.1 - 1.3 - 1.5 - 1.6 - 1.8	22x30x51	80-92	171 407 311 K	**CVJ021**	
1.4 - 1.6 - 1.8	22x30x51	83-97	171 407 311 K	**CVJ021**	
1.4 - 1.9 Diesel Variant	22x30x51	93-99	171 407 311 K	**CVJ021**	
1.6 Diesel - Turbo Diesel	22x30x51	79-91	171 407 311 K	**CVJ021**	
1.8 Syncro	22x30x51	86-91	171 407 311 K	**CVJ021**	
1.9 Diesel	22x30x51	91-97	171 407 311 K	**CVJ021**	
GOLF III					
2.0	36x30x53	91-97	357 498 099 EV	**CVJ028**	
2.0 GTI 16V	36x30x53	92-97	357 498 099 EV	**CVJ028**	
2.8 VR6	36x30x53	92-97	357 498 099 EV	**CVJ028**	
GOLF III Variant					
2.0	36x30x53	93-99	357 498 099 EV	**CVJ028**	

follow VOLKSWAGEN

MODELLO MODEL	DIMENSIONI DIMENSIONS	ANNO YEAR	RIF ORIGINALE ORIGINAL REF	RIF CORAM CORAM REF	NOTE NOTES
GOLF IV					
1.4 16V	36x30x53	97-05	357 498 099 EV	**CVJ028**	
1.6	36x30x53	97-05	357 498 099 EV	**CVJ028**	
1.6 16V	36x30x53	00-05	357 498 099 EV	**CVJ028**	
1.6 FSI	36x30x53	02-05	357 498 099 EV	**CVJ028**	
1.8	36x30x53	97-05	357 498 099 EV	**CVJ028**	
1.8 4motion	36x30x53	98-05	357 498 099 EV	**CVJ028**	
1.8 T - 1.9 SDI - 1.9 TDI	36x30x53	97-05	357 498 099 EV	**CVJ028**	
1.9 TD	36x30x53	97-05	357 498 099 EV	**CVJ028**	
1.9 TDI 4motion	36x30x53	98-02	357 498 099 EV	**CVJ028**	
2.0	36x30x53	98-04	357 498 099 EV	**CVJ028**	
2.0 4motion	36x30x53	00-05	357 498 099 EV	**CVJ028**	
2.3 V5	36x30x53	97-05	357 498 099 EV	**CVJ028**	
GOLF IV Variant					
1.4 16V - 1.6	36x30x53	99-06	357 498 099 EV	**CVJ028**	
1.6 16V	36x30x53	00-06	357 498 099 EV	**CVJ028**	
1.6 FSI	36x30x53	02-06	357 498 099 EV	**CVJ028**	
1.8 4motion	36x30x53	99-06	357 498 099 EV	**CVJ028**	
1.8 T	36x30x53	00-06	357 498 099 EV	**CVJ028**	
1.9 SDI - 1.9 TDI	36x30x53	99-06	357 498 099 EV	**CVJ028**	
1.9 TDI 4motion	36x30x53	99-02	357 498 099 EV	**CVJ028**	
2.0	36x30x53	99-06	357 498 099 EV	**CVJ028**	
2.0 4motion	36x30x53	00-06	357 498 099 EV	**CVJ028**	
2.0 Bi-Fuel	36x30x53	02-06	357 498 099 EV	**CVJ028**	
2.3 V5	36x30x53	99-06	357 498 099 EV	**CVJ028**	
GOLF PLUS					
1.4 TSI	36x30x59	06->	1K0 498 099 AX	**CVJ029**	
1.6	36x30x59	05->	1K0 498 099 AX	**CVJ029**	
1.6 FSI - 1.9 TDI - 2.0 FSI	36x30x59	05-08	1K0 498 099 AX	**CVJ029**	
GOLF V					
1.4 TSI	36x30x59	06-08	1K0 498 099 AX	**CVJ029**	
1.6	36x30x59	04-08	1K0 498 099 AX	**CVJ029**	
1.6 FSI	36x30x59	03-08	1K0 498 099 AX	**CVJ029**	
1.9 TDI	36x30x59	03-08	1K0 498 099 AX	**CVJ029**	
1.9 TDI 4motion	36x30x59	04-08	1K0 498 099 AX	**CVJ029**	
2.0 FSI - 2.0 FSI 4motion - 2.0 SDI	36x30x59	04-08	1K0 498 099 AX	**CVJ029**	

follow VOLKSWAGEN

MODELLO MODEL	DIMENSIONI DIMENSIONS	ANNO YEAR	RIF ORIGINALE ORIGINAL REF	RIF CORAM CORAM REF	NOTE NOTES
GOLF V Variant					
1.4 TSI - 1.6 - 1.9 TDI	36x30x59	07->	1K0 498 099 AX	**CVJ029**	
GOLF VI					
1.4 TSI - 1.6 - 2.0 TDI	36x30x59	08->	1K0 498 099 AX	**CVJ029**	
1.6 BiFuel	36x30x59	09->	1K0 498 099 AX	**CVJ029**	
JETTA					
1.0 - 1.1 - 1.3 - 1.5 - 1.6 - 1.8	22x30x51	80-92	171 407 311 K	**CVJ021**	
1.4 - 1.6 -1.8	22x30x51	91-97	171 407 311 K	**CVJ021**	
1.6 Diesel - Turbo Diesel	22x30x51	79-91	171 407 311 K	**CVJ021**	
1.9 Diesel	22x30x51	91-97	171 407 311 K	**CVJ021**	
JETTA I					
1.6 GLI	22x30x51	79-82	171 407 311 K	**CVJ021**	
1.8	22x30x51	82-83	171 407 311 K	**CVJ021**	
JETTA II					
1.3	22x30x51	84-87	171 407 311 K	**CVJ021**	
1.6	22x30x51	86-91	171 407 311 K	**CVJ021**	
1.6 Diesel /Turbo Diesel	22x30x51	84-91	171 407 311 K	**CVJ021**	
1.8	22x30x51	86-90	171 407 311 K	**CVJ021**	
1.8 Syncro	22x30x51	87-91	171 407 311 K	**CVJ021**	
JETTA III					
1.4 TSI	36x30x59	06-10	1K0 498 099 AX	**CVJ029**	
1.6 - 1.6 FSI - 1.9 TDI - 2.0 FSI	36x30x59	05-10	1K0 498 099 AX	**CVJ029**	
2.0 TDI - 2.5 FSI	36x30x59	06-10	1K0 498 099 AX	**CVJ029**	
NEW BEETLE					
1.6	36x30x53	99-00	357 498 099 EV	**CVJ028**	
1.8 T	36x30x53	99->	357 498 099 EV	**CVJ028**	
1.9 TDI	36x30x53	98-04	357 498 099 EV	**CVJ028**	
2.0	36x30x53	98->	357 498 099 EV	**CVJ028**	
2.3 V5	36x30x53	00->	357 498 099 EV	**CVJ028**	

follow VOLKSWAGEN

MODELLO MODEL	DIMENSIONI DIMENSIONS	ANNO YEAR	RIF ORIGINALE ORIGINAL REF	RIF CORAM CORAM REF	NOTE NOTES
PASSAT					
1.3 - 1.6	22x30x51	80-91	171 407 311 K	**CVJ021**	
1.4 TSI	36x30x59	07-10	1K0 498 099 AX	**CVJ029**	
1.6	36x30x59	05-10	1K0 498 099 AX	**CVJ029**	
1.6 FSI	36x30x59	05-08	1K0 498 099 AX	**CVJ029**	
1.6 Turbo Diesel	22x30x51	88-93	171 407 311 K	**CVJ021**	
1.6 Turbo Diesel Variant	22x30x51	88-93	171 407 311 K	**CVJ021**	
1.6 Variant	22x30x51	88-91	171 407 311 K	**CVJ021**	
1.8 - 2.0	22x30x51	83->	171 407 311 K	**CVJ021**	
1.9 TDI	36x30x53	96-96	357 498 099 EV	**CVJ028**	
1.9 TDI	36x30x59	05-08	1K0 498 099 AX	**CVJ029**	
2.0 16V	36x30x53	94-96	357 498 099 EV	**CVJ028**	
2.0 FSI - 2.0 FSI 4motion	36x30x59	05-10	1K0 498 099 AX	**CVJ029**	
2.0 TDI 16V 4motion - 2.0 TDI 4motion	36x30x59	05->	1K0 498 099 AX	**CVJ029**	
2.2	22x30x51	81-82	171 407 311 K	**CVJ021**	
2.8 VR6	36x30x53	91-96	357 498 099 EV	**CVJ028**	
3.2 FSI 4motion	36x30x59	05-10	1K0 498 099 AX	**CVJ029**	
PASSAT Variant					
1.4 TSI	36x30x59	07-10	1K0 498 099 AX	**CVJ029**	
1.9 TDI	36x30x59	05-08	1K0 498 099 AX	**CVJ029**	
1.9 TDI	36x30x53	96-97	357 498 099 EV	**CVJ028**	
2.0 16V	36x30x53	94-97	357 498 099 EV	**CVJ028**	
2.0 FSI - 2.0 FSI 4motion	36x30x59	05-10	1K0 498 099 AX	**CVJ029**	
2.0 TDI 16V 4motion - 2.0 TDI 4motion	36x30x59	05->	1K0 498 099 AX	**CVJ029**	
2.8 VR6	36x30x53	91-97	357 498 099 EV	**CVJ028**	
2.9 VR6 Syncro	36x30x53	94-97	357 498 099 EV	**CVJ028**	
3.2 FSI 4motion	36x30x59	05-10	1K0 498 099 AX	**CVJ029**	
POLO CLASSIC					
1.4 - 1.6 - 1.9 SDI	22x30x51	95-01	171 407 311 K	**CVJ021**	
POLO VARIANT					
1.4 -1.6 - 1.9 SDI	22x30x51	97-01	171 407 311 K	**CVJ021**	
SANTANA					
1.6 - 1.8 - 2.2	22x30x51	81-84	171 407 311 K	**CVJ021**	

follow VOLKSWAGEN

MODELLO MODEL	DIMENSIONI DIMENSIONS	ANNO YEAR	RIF ORIGINALE ORIGINAL REF	RIF CORAM CORAM REF	NOTE NOTES
SCIROCCO					
1.1 - 1.3	22x30x51	80-84	171 407 311 K	**CVJ021**	
1.4 TSI	36x30x59	08->	1K0 498 099 AX	**CVJ029**	
1.6	22x30x51	80-89	171 407 311 K	**CVJ021**	
1.8	22x30x51	82-89	171 407 311 K	**CVJ021**	
TOURAN					
1.4 TSI	36x30x59	06->	1K0 498 099 AX	**CVJ029**	
1.6	36x30x59	03-10	1K0 498 099 AX	**CVJ029**	
1.6 FSI	36x30x59	03-07	1K0 498 099 AX	**CVJ029**	
1.9 TDI	36x30x59	03->	1K0 498 099 AX	**CVJ029**	
2.0 EcoFuel	36x30x59	06-09	1K0 498 099 AX	**CVJ029**	
2.0 FSI	36x30x59	03->	1K0 498 099 AX	**CVJ029**	
VENTO					
1.4 - 1.6	22x30x51	91->	171 407 311 K	**CVJ021**	
1.9 Diesel	22x30x51	91->	171 407 311 K	**CVJ021**	
2.0	36x30x53	91-98	457 498 099 EV	**CVJ028**	
2.8 VR6	36x30x53	92-98	457 498 099 EV	**CVJ028**	

GIUNTI OMOCINETICI
CV-JOINTS
JOINTS HOMOCINETIQUES
LISTA DI COMPARAZIONE – CROSS REFERENCES – REFERENCES CROISEES

CORAM	APPLICATION	O.E.	LOBRO	CIFAM	SKF	METELLI
CVJ001	FIAT	4247399				
CVJ001	FIAT	4308412				
CVJ001	FIAT	5998706				
CVJ001	FIAT	40871120				
CVJ002	FIAT	4390952				
CVJ002	FIAT	4475837				
CVJ002	FIAT	7629457				
CVJ002	FIAT	7656786				
CVJ003	FIAT	7659169				
CVJ003	FIAT	92601903				
CVJ004	FIAT	82413699				
CVJ004	FIAT	82449123				
CVJ005	ALFA ROMEO	60812753				
CVJ005	FIAT	46307032				
CVJ005	FIAT	46307171				
CVJ007	FIAT/ALFAROMEO/LANCIA	46307122	303266	607-231	VKJA3152	15-1231
CVJ007	FIAT/ALFAROMEO/LANCIA	7078573	303266	607-231	VKJA3152	15-1231
CVJ008	FIAT	7084108				
CVJ010	LADA	2108-2215010				
CVJ011	LADA	2108-2215011				
CVJ012	LADA					
CVJ013	LADA	2170-2215012				
CVJ016	DAEWOO	96257803				
CVJ016	DAEWOO	96298465				
CVJ016	DAEWOO	96298466				
CVJ017	DAEWOO	96256953				
CVJ017	DAEWOO	96256954				
CVJ017	DAEWOO	96256965				
CVJ017	DAEWOO	96256966				
CVJ017	DAEWOO	96257801				
CVJ017	DAEWOO	96298467				
CVJ017	DAEWOO	96298468				
CVJ021	AUDI- VW	171407311K				
CVJ021	SEAT-VW	171407311F				
CVJ021	SEAT-VW	171407311K				
CVJ021	SEAT-VW	191407311				
CVJ021	SEAT-VW	191407311H				
CVJ021	SEAT-VW	1H0407311C				

CORAM	APPLICATION	O.E.	LOBRO	CIFAM	SKF	METELLI
CVJ023	KIA-MAZDA	B00525600D				
CVJ023	KIA-MAZDA	B00525600				
CVJ023	KIA-MAZDA	B00525400				
CVJ023	KIA-MAZDA	B00525400D				
CVJ024	FORD-KIA-MAZDA	B00325400				
CVJ024	FORD-KIA-MAZDA	B00325600D				
CVJ024	FORD-KIA-MAZDA	B00325400D				
CVJ024	FORD-KIA-MAZDA	B00225600				
CVJ024	FORD-KIA-MAZDA	B00225500				
CVJ024	FORD-KIA-MAZDA	B00325600				
CVJ024	MAZDA	B00325600C				
CVJ024	MAZDA	B00325400C				
CVJ024	MAZDA	B00225500B				
CVJ024	MAZDA	B00225400B				
CVJ024	MAZDA	B00225600B				
CVJ025	HYUNDAI-MITSUBISHI-PROTON	49507-21000		606-026		15-0026
CVJ025	HYUNDAI-MITSUBISHI-PROTON	49508-21000		606-026		15-0026
CVJ025	MITSUBISHI - HYUNDAI	MB526898		606-026		15-0026
CVJ025	MITSUBISHI - HYUNDAI	MB297186		606-026		15-0026
CVJ025	MITSUBISHI - HYUNDAI	MB297185		606-026		15-0026
CVJ025	MITSUBISHI - HYUNDAI	MB297131		606-026		15-0026
CVJ025	MITSUBISHI - HYUNDAI	MB297121		606-026		15-0026
CVJ025	MITSUBISHI - HYUNDAI	MB176865		606-026		15-0026
CVJ025	MITSUBISHI - HYUNDAI	MB176864		606-026		15-0026
CVJ025	MITSUBISHI - HYUNDAI	MB176161		606-026		15-0026
CVJ025	MITSUBISHI - HYUNDAI	MB526897		606-026		15-0026
CVJ025	MITSUBISHI - HYUNDAI	MB526548		606-026		15-0026
CVJ025	MITSUBISHI - HYUNDAI	MB526547		606-026		15-0026
CVJ025	MITSUBISHI - HYUNDAI	MB526444		606-026		15-0026
CVJ025	MITSUBISHI - HYUNDAI	MB526443		606-026		15-0026
CVJ025	MITSUBISHI - HYUNDAI	MB526118		606-026		15-0026
CVJ025	MITSUBISHI - HYUNDAI	MB526117		606-026		15-0026
CVJ025	MITSUBISHI - HYUNDAI	MB297189		606-026		15-0026
CVJ025	MITSUBISHI - HYUNDAI	MB526490		606-026		15-0026
CVJ025	MITSUBISHI - HYUNDAI	MB176160		606-026		15-0026
CVJ025	MITSUBISHI - HYUNDAI	MB176161		606-026		15-0026
CVJ025	MITSUBISHI - HYUNDAI	MB176865		606-026		15-0026
CVJ025	MITSUBISHI - HYUNDAI	MB176866		606-026		15-0026

CORAM	APPLICATION	O.E.	LOBRO	CIFAM	SKF	METELLI
CVJ025	MITSUBISHI - HYUNDAI	MB176867		606-026		15-0026
CVJ025	MITSUBISHI - HYUNDAI	MB297148		606-026		15-0026
CVJ025	MITSUBISHI - HYUNDAI	MB297343		606-026		15-0026
CVJ025	MITSUBISHI - HYUNDAI	MB297344		606-026		15-0026
CVJ025	MITSUBISHI - HYUNDAI	MB297345		606-026		15-0026
CVJ025	MITSUBISHI - HYUNDAI	MB297346		606-026		15-0026
CVJ025	MITSUBISHI - HYUNDAI	MB297347		606-026		15-0026
CVJ025	MITSUBISHI - HYUNDAI	MB525577		606-026		15-0026
CVJ025	MITSUBISHI - HYUNDAI	MB526063		606-026		15-0026
CVJ025	MITSUBISHI - HYUNDAI	MB526066		606-026		15-0026
CVJ025	MITSUBISHI - HYUNDAI	MB526531		606-026		15-0026
CVJ025	MITSUBISHI - HYUNDAI	MB526581		606-026		15-0026
CVJ025	MITSUBISHI - HYUNDAI	MB526854		606-026		15-0026
CVJ025	MITSUBISHI - HYUNDAI	MB526866		606-026		15-0026
CVJ025	MITSUBISHI - HYUNDAI	MB526897		606-026		15-0026
CVJ025	MITSUBISHI - HYUNDAI	MB526898		606-026		15-0026
CVJ025	MITSUBISHI - HYUNDAI	MB620770		606-026		15-0026
CVJ027	SKODA	115420170	303001	607-158		15-1158
CVJ027	SKODA	115420214	303001	607-158		15-1158
CVJ027	SKODA	115420217	303001	607-158		15-1158
CVJ027	SKODA	441.0.7265-158.6	303001	607-158		15-1158
CVJ027	SKODA	441.0.7265-170.6	303001	607-158		15-1158
CVJ027	SKODA	115420170	303001	606-158		15-1158
CVJ027	SKODA	115420214	303001	606-158		15-1158
CVJ027	SKODA	115420217	303001	606-158		15-1158
CVJ027	SKODA	441.0.7265-158.6	303001	606-158		15-1158
CVJ027	SKODA	441.0.7265-170.6	303001	606-158		15-1158
CVJ028	AUDI- VW - SEAT -SKODA	1H0498099A	302963		VKJA3011	15-1189
CVJ028	AUDI- VW - SEAT -SKODA	357498099E	302963		VKJA3011	15-1189
CVJ028	AUDI- VW - SEAT -SKODA	357498099EV	302963		VKJA3011	15-1189
CVJ028	AUDI- VW - SEAT -SKODA	357498099EX	302963		VKJA3011	15-1189
CVJ029	AUDI-SEAT-SKODA-VW	1K0407311L			VKJA3027	
CVJ029	AUDI-SEAT-SKODA-VW	1K0498099A			VKJA3027	
CVJ029	AUDI-SEAT-SKODA-VW	1K0498099AX			VKJA3027	
CVJ029	AUDI-SEAT-SKODA-VW	1K0498099			VKJA3027	
CVJ029	AUDI-SEAT-SKODA-VW	1K0498099E			VKJA3027	
CVJ029	AUDI-SEAT-SKODA-VW	1K0498099X			VKJA3027	
CVJ032	OPEL	374176		607-289A	VKJA3100	15-1289A

CORAM	APPLICATION	O.E.	LOBRO	CIFAM	SKF	METELLI
CVJ032	OPEL	347241		607-289A	VKJA3100	15-1289A
CVJ032	OPEL	374262		607-289A	VKJA3100	15-1289A
CVJ032	OPEL	90498412		607-289A	VKJA3100	15-1289A
CVJ032	OPEL	90334948		607-289A	VKJA3100	15-1289A
CVJ032	OPEL	90496368		607-289A	VKJA3100	15-1289A
CVJ033	SUZUKI	44101-84331		607-117	VKJC7633	15-1117
CVJ033	SUZUKI	44101-84150		607-117	VKJC7633	15-1117
CVJ033	SUZUKI	44102-84331		607-117	VKJC7633	15-1117
CVJ033	SUZUKI	44102-84330		607-117	VKJC7633	15-1117
CVJ033	SUZUKI	44102-84012		607-117	VKJC7633	15-1117
CVJ033	SUZUKI	44101-84330		607-117	VKJC7633	15-1117
CVJ033	SUZUKI	44102-84150		607-117	VKJC7633	15-1117
CVJ033	SUZUKI	44101-84012		607-117	VKJC7633	15-1117
CVJ034	SUZUKI	44102-62B11	302628	607-114		15-1114
CVJ034	SUZUKI	44101-63B20	302628	607-114		15-1114
CVJ034	SUZUKI	44102-60B12	302628	607-114		15-1114
CVJ034	SUZUKI	44102-60B20	302628	607-114		15-1114
CVJ034	SUZUKI	44102-60B30	302628	607-114		15-1114
CVJ034	SUZUKI	44102-62B12	302628	607-114		15-1114
CVJ034	SUZUKI	44102-62B22	302628	607-114		15-1114
CVJ034	SUZUKI	44102-63B10	302628	607-114		15-1114
CVJ034	SUZUKI	44102-63B20	302628	607-114		15-1114
CVJ034	SUZUKI	44102-63B21	302628	607-114		15-1114
CVJ034	SUZUKI	44116-60B30	302628	607-114		15-1114
CVJ034	SUZUKI	44101-62B12	302628	607-114		15-1114
CVJ034	SUZUKI	44116-60B20	302628	607-114		15-1114
CVJ034	SUZUKI	44101-62B11	302628	607-114		15-1114
CVJ034	SUZUKI	44101-60B30	302628	607-114		15-1114
CVJ034	SUZUKI	44101-60B20	302628	607-114		15-1114
CVJ034	SUZUKI	44101-60B12	302628	607-114		15-1114
CVJ034	SUZUKI	44101-63B10	302628	607-114		15-1114
CVJ034	SUZUKI	44101-62B22	302628	607-114		15-1114
CVJ034	SUZUKI	44117-62B10	302628	607-114		15-1114
CVJ034	SUZUKI	44101-63B11	302628	607-114		15-1114
CVJ034	SUZUKI	44102-63B11	302628	607-114		15-1114
CVJ035	AUDI	895407311	302128	607-066		15-1066
CVJ035	AUDI	893498099E	302128	607-066		15-1066

GIUNTI OMOCINETICI
CV-JOINTS
JOINTS HOMOCINETIQUES
LISTA DI COMPARAZIONE CON L'ORIGINALE – OES CROSS REFERENCES – OES REFERENCES CROISEES

ALFAROMEO	CORAM
60812753	CVJ005
AUDI	**CORAM**
893498099E	CVJ035
895407311	CVJ035
AUDI-VW	**CORAM**
171407311K	CVJ021
AUDI-VW-SEAT-SKODA	**CORAM**
1H0498099A	CVJ028
357498099E	CVJ028
357498099EV	CVJ028
357498099EX	CVJ028
AUDI-SEAT-SKODA-VW	**CORAM**
1K0407311L	CVJ029
1K0498099	CVJ029
1K0498099A	CVJ029
1K0498099AX	CVJ029
1K0498099E	CVJ029
1K0498099X	CVJ029
DAEWOO	**CORAM**
96256953	CVJ017
96256954	CVJ017
96256965	CVJ017
96256966	CVJ017
96257801	CVJ017
96257803	CVJ016
96298465	CVJ016
96298466	CVJ016
96298467	CVJ017
96298468	CVJ017
FIAT	**CORAM**
40871120	CVJ001
4247399	CVJ001
4308412	CVJ001
4390952	CVJ002
4475837	CVJ002
46307032	CVJ005
46307171	CVJ005
5998706	CVJ001
7084108	CVJ008
7629457	CVJ002
7656786	CVJ002
7659169	CVJ003
82413699	CVJ004
82449123	CVJ004
92601903	CVJ003
FIAT/ALFAROMEO/LANCIA	**CORAM**
46307122	CVJ007
7078573	CVJ007
FORD-KIA-MAZDA	**CORAM**
B00225500	CVJ024
B00225600	CVJ024
B00325400	CVJ024
B00325400D	CVJ024
B00325600	CVJ024
B00325600D	CVJ024
HYUNDAI-MITSUBISHI-PROTON	**CORAM**
49507-21000	CVJ025
49508-21000	CVJ025
KIA-MAZDA	**CORAM**
B00525400	CVJ023
B00525400D	CVJ023
B00525600	CVJ023
B00525600D	CVJ023
LADA	**CORAM**
2108-2215010	CVJ010
2108-2215011	CVJ011
2170-2215012	CVJ013
MAZDA	**CORAM**
B00225400B	CVJ024
B00225500B	CVJ024
B00225600B	CVJ024
B00325400C	CVJ024
B00325600C	CVJ024
MITSUBISHI-HYUNDAI	**CORAM**
MB176160	CVJ025
MB176161	CVJ025
MB176864	CVJ025
MB176865	CVJ025
MB176866	CVJ025
MB176867	CVJ025
MB297121	CVJ025
MB297131	CVJ025
MB297148	CVJ025
MB297185	CVJ025
MB297186	CVJ025
MB297189	CVJ025
MB297343	CVJ025
MB297344	CVJ025
MB297345	CVJ025
MB297346	CVJ025
MB297347	CVJ025
MB525577	CVJ025
MB526063	CVJ025
MB526066	CVJ025
MB526117	CVJ025
MB526118	CVJ025
MB526443	CVJ025
MB526444	CVJ025
MB526490	CVJ025
MB526531	CVJ025
MB526547	CVJ025
MB526548	CVJ025
MB526581	CVJ025
MB526854	CVJ025
MB526866	CVJ025

MB526897	CVJ025
MB526898	CVJ025
MB620770	CVJ025
OPEL	**CORAM**
347241	CVJ032
374176	CVJ032
374262	CVJ032
90334948	CVJ032
90496368	CVJ032
90498412	CVJ032
SEAT-VW	**CORAM**
171407311F	CVJ021
171407311K	CVJ021
191407311	CVJ021
191407311H	CVJ021
1H0407311C	CVJ021
SKODA	**CORAM**
115420170	CVJ027
115420214	CVJ027
115420217	CVJ027
441.0.7265-158.6	CVJ027
441.0.7265-170.6	CVJ027
SUZUKI	**CORAM**
44101-60B12	CVJ034
44101-60B20	CVJ034
44101-60B30	CVJ034
44101-62B11	CVJ034
44101-62B12	CVJ034
44101-62B22	CVJ034
44101-63B10	CVJ034
44101-63B11	CVJ034
44101-63B20	CVJ034
44101-84012	CVJ033
44101-84150	CVJ033
44101-84330	CVJ033
44101-84331	CVJ033

44102-60B12	CVJ034
44102-60B20	CVJ034
44102-60B30	CVJ034
44102-62B11	CVJ034
44102-62B12	CVJ034
44102-62B22	CVJ034
44102-63B10	CVJ034
44102-63B11	CVJ034
44102-63B20	CVJ034
44102-63B21	CVJ034
44102-84012	CVJ033
44102-84150	CVJ033
44102-84330	CVJ033
44102-84331	CVJ033
44116-60B20	CVJ034
44116-60B30	CVJ034
44117-62B10	CVJ034

CIFAM	CORAM
606-026	CVJ025
606-158	CVJ027
607-066	CVJ035
607-114	CVJ034
607-117	CVJ033
607-158	CVJ027
607-231	CVJ007
607-289A	CVJ032

LOBRO	CORAM
302128	CVJ035
302628	CVJ034
302963	CVJ028
303001	CVJ027
303266	CVJ007

METELLI	CORAM
15-0026	CVJ025
15-1066	CVJ035
15-1114	CVJ034
15-1117	CVJ033
15-1158	CVJ027
15-1189	CVJ028
15-1231	CVJ007
15-1289A	CVJ032

SKF	CORAM
VKJA 3152	CVJ007
VKJA3011	CVJ028
VKJA3027	CVJ029
VKJA3100	CVJ032
VKJC7633	CVJ033

CVJ001

FIAT	40871120		
FIAT	4247399		
FIAT	4308412		
FIAT	5998706		

CVJ002

FIAT	4390952		
FIAT	4475837		
FIAT	7629457		
FIAT	7656786		

CVJ003

FIAT	7659169		
FIAT	92601903		

CVJ004

FIAT	82413699		
FIAT	82449123		

CVJ005

ALFA ROMEO	60812753		
FIAT	46307032		
FIAT	46307171		

CVJ007

FIAT/ALFAROMEO/LANCIA	46307122		
FIAT/ALFAROMEO/LANCIA	7078573		

CVJ008

FIAT	7084108		

CVJ010

LADA	2108-2215010		

CVJ011

LADA	2108-2215011		

CVJ012

LADA			

CVJ013

LADA	2170-2215012		

CVJ016

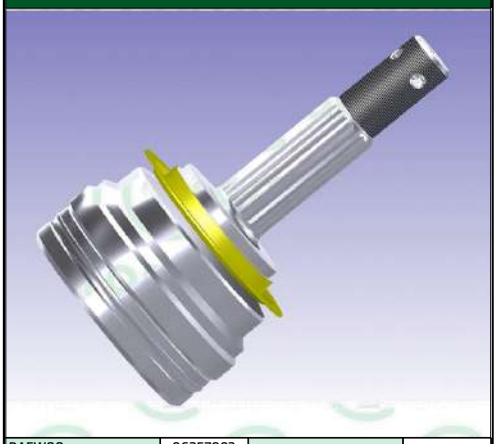

DAEWOO	96257803		
DAEWOO	96298465		
DAEWOO	96298466		

CVJ017

DAEWOO	96256953	DAEWOO	96298467
DAEWOO	96256954	DAEWOO	96298468
DAEWOO	96256965		
DAEWOO	96256966		
DAEWOO	96257801		

CVJ021

AUDI- VW	171407311 K	SEAT-VW	1H0407311C
SEAT-VW	171407311F		
SEAT-VW	171407311K		
SEAT-VW	191407311		
SEAT-VW	191407311H		

CVJ023

KIA-MAZDA	B00525400		
KIA-MAZDA	B00525400D		
KIA-MAZDA	B00525600		
KIA-MAZDA	B00525600D		

CVJ024

FORD-KIA-MAZDA	B00225500	FORD-KIA-MAZDA	B00325600D
FORD-KIA-MAZDA	B00225600	MAZDA	B00225400B
FORD-KIA-MAZDA	B00325400	MAZDA	B00225500B
FORD-KIA-MAZDA	B00325400D	MAZDA	B00225600B
FORD-KIA-MAZDA	B00325600	MAZDA	B00325400C

CVJ025

HYUNDAI-MITSUBISHI-PROTON	49507-21000	MITSUBISHI - HYUNDAI	MB176864
HYUNDAI-MITSUBISHI-PROTON	49508-21000	MITSUBISHI - HYUNDAI	MB176865
MITSUBISHI - HYUNDAI	MB176160	MITSUBISHI - HYUNDAI	MB176865
MITSUBISHI - HYUNDAI	MB176161	MITSUBISHI - HYUNDAI	MB176866
MITSUBISHI - HYUNDAI	MB176161	MITSUBISHI - HYUNDAI	MB176867

CVJ027

SKODA	115420170	SKODA	115420217
SKODA	115420170	SKODA	441.0.7265-158.6
SKODA	115420214	SKODA	441.0.7265-158.6
SKODA	115420214	SKODA	441.0.7265-170.6
SKODA	115420217	SKODA	441.0.7265-170.6

CVJ028

AUDI- VW - SEAT -SKODA	4H0 498 099 A		
AUDI- VW - SEAT -SKODA	8S7 498 099 E		
AUDI- VW - SEAT -SKODA	8S7 498 099 EV		
AUDI- VW - SEAT -SKODA	8S7 498 099 EX		

CVJ029

AUDI-SEAT-SKODA-VW	1K0 407 311 L	AUDI-SEAT-SKODA-VW	1K0 498 099 X
AUDI-SEAT-SKODA-VW	1K0 498 099		
AUDI-SEAT-SKODA-VW	1K0 498 099 A		
AUDI-SEAT-SKODA-VW	1K0 498 099 AX		
AUDI-SEAT-SKODA-VW	1K0 498 099 E		

CVJ032

OPEL	347241	OPEL	90498412
OPEL	374176		
OPEL	374262		
OPEL	90334948		
OPEL	90496368		

CVJ033

SUZUKI	44101-84012	SUZUKI	44102-84150
SUZUKI	44101-84150	SUZUKI	44102-84330
SUZUKI	44101-84330	SUZUKI	44102-84331
SUZUKI	44101-84331		
SUZUKI	44102-84012		

CVJ034

SUZUKI	44101-60B12	SUZUKI	44101-62B22
SUZUKI	44101-60B20	SUZUKI	44101-63B10
SUZUKI	44101-60B30	SUZUKI	44101-63B11
SUZUKI	44101-62B11	SUZUKI	44101-63B20
SUZUKI	44101-62B12	SUZUKI	44102-60B12

CVJ035

AUDI	893498099E		
AUDI	895407311		

Coram®

by HPARTS
Automotive Solutions

PERNI FUSI
Pins for stub axles

FIAT					
MODELLO MODEL	DIMENSIONI DIMENSIONS	ANNO YEAR	RIF ORIGINALE ORIGINAL REF	RIF CORAM CORAM REF	NOTE NOTES
126 - 500R					
TUTTI I TIPI			901085	**PF000**	
500 D-F-L					
TUTTI I TIPI				**PF001**	
600 - 600 D					
TUTTI I TIPI			869770	**PF002**	
600 E - 850					
TUTTI I TIPI			866770	**PF003**	

PF000

FIAT	4230533	FIAT	985783
FIAT	869763		
FIAT	869765		
FIAT	899499		
FIAT	901085		

PF001

FIAT			

PF002

FIAT	4230533		
FIAT	869765		
FIAT	869770		
FIAT	899499		

PF003

FIAT	4230533		
FIAT	866770		
FIAT	869765		
FIAT	899499		

Coram®

by HPARTS
Automotive Solutions

GHIERE
Plug for wheel bearings locking

GHIERE
PLUG FOR WHEEL BEARINGS LOCKING
FRETTE BLOCAGE ROULEMENT ROUE ET DEMI-ESSIEUX

FIAT					
MODELLO MODEL	DIMENSIONI DIMENSIONS	ANNO YEAR	RIF ORIGINALE ORIGINAL REF	RIF CORAM CORAM REF	NOTE NOTES
127					
127-127C-127CL U.T.			4243293 4443881	**G0001** **G0002**	
128					
Tutti i tipi/All types/Tous types 128 3 P - 128 CL			4243293 4354049	**G0001** **G0003**	
A 112					
Tutti i tipi/All types/Tous types			4243293	**G0001**	
UNO					
Tutti i tipi			4443881	**G0002**	WITH RUBBER

GHIERE

PLUG FOR WHEEL BEARINGS LOCKING

FRETTE BLOCAGE ROULEMENT ROUE ET DEMI-ESSIEUX

IMMAGINI – IMAGES – IMAGES

G0001

FIAT	4243293		

G0002

FIAT	4443881		

G0003

FIAT	4354049		

- Gli articoli compresi nel presente catalogo non sono originali ma perfettamente intercambiabili con essi.
- I riferimenti originali sono precisati al puro scopo di evitare possibili malintesi.
- Riproduzione, anche parziale, vietata salvo autorizzazione della Coram s.r.l.
- Le informazioni contenute in questo catalogo sono state attentamente verificate. Non ci assumiamo, comunque, alcuna responsabilità per eventuali errori od omissioni.

- Items included in present catalogue are not original but perfectly interchangeable with them.
- We have stated original references only in order to avoid possible misunderstandings.
- Reproduction, even partial, is prohibited without Coram s.r.l. authorization.
- Information included in present catalogue have been checked carefully, however we are not responsible for any error or omission.

- Les articles compris dans ce catalogue ne sont pas originaux mais parfaitement interchangeables avec eux.
- Les références originales sont précisées au seul but d'éviter toute méprise.
- Reproduction, méme partielle, interdite sauf autorisation de Coram s.r.l.
- Les informations contenues dans ce catalogue ont été vérifiées avec soin, toutefois nous déclinons toute responsabilité en cas d'erreurs ou d'omissions.

CONDIZIONI GENERALI DI VENDITA

1. I prezzi non sono impegnativi, possono variare anche senza preavviso e si intendono franco nostro stabilimento. Nelle esportazioni vengono praticati FOB solo se gli ordini superano € 5.000,00.
2. l'Imballo è a carico dell'acquirente e sarà addebitato in fattura al prezzo di costo.
3. La merce, in ogni caso, viaggia a rischio e pericolo del committente.
4. Eventuali ritardi nelle consegne non possono, in alcun caso essere motivo di richiesta danni.
5. La garanzia, come d'uso, si limita alla sostituzione del pezzo contestato, se riconosciuto difettoso a causa di un errore di fabbricazione dai nostri tecnici e ci sia reso franco da ogni spesa.
6. Qualsiasi reclamo, per essere valido, deve pervenire entro otto giorni dal ricevimento della merce e, in ogni caso, non dà diritto all'acquirente di trattenere somme per fatture scadute.
7. Negli ordini si prega voler indicare sempre il numero di riferimento del nostro catalogo.
8. In caso di insoluti o di ritardo nei pagamenti saranno addebitati al committente, oltre alle eventuali spese legali, gli interessi di mora nella misura praticata dalle banche per finanziamenti a breve termine.
9. Per qualsiasi controversia è unicamente competente il Foro di Torino.

GENERAL TERMS AND CONDITIONS OF SALE

1. The prices are not binding, can be changed without any prior notice and are intended Ex-Works. Fob delivery can be granted for foreign trade if the total order amount is minimum € 5.000.
2. Packing charges are on purchaser's account and will be charged on invoice.
3. Goods, in any case, travel at risk of the purchaser.
4. A possible delivery delay could never be subject to claim for damages from the costumer.
5. The guarantee is usually limited to the replacement of the claimed piece provided that the part is recognized as defective due to manufacturer's fault from our technicians and that the it is returned to us free of charge.
6. Any claim, to be accepted, must be notified to us within eight days from receipt of the goods and, in any case, it will not give to the purchaser the right to deduct any amount from overdue invoices.
7. Our part numbers should always be mentioned on the purchase order.
8. In case of insolvency or delay in payment, in addition to possible legal charges, we will debit to customer the same interest rate debited by banks for short-time financings.
9 The court of Turin shall have exclusive jurisdiction to settle any disputes that may arise.

CONDITIONS GENERALES DE VENTE

1. Les prix ne sont pas engageants, peuvent varier même sans préavis et s'entendent Franco Départ Usine. Pour commandes à l'exportation s avec un montant total de minimum € 5.000 on peut accorder la livraison FOB.
2. L'emballage est à charge de l'acheteur et sera débité dans la facture.
3. La marchandise voyage aux risques et périls du client.
4. Eventuels retards dans la livraison ne peuvent pas soulever, en tous cas, demande de dommages.
5. La garantie est limitée à la substitution de la pièce contestée, pourvu que celle-ci soit reconnue défectueuse par faute duabricant de la part de nos techniciens et qu'elle nous soit renvoyée gratuitement Franco nos Etablissements.
6. Toute réclamation, pour être valable, doit nous parvenir dans les huit jours après réception de la marchandise et, en aucun cas, l'acheteur n'a le droit de retenir des sommes dues pour factures échues.
7. Prière de bien vouloir toujours marquer notre référence dans vos commandes.
8. En cas d'impayé ou de paiement retardé seront débités au destinataire, outre les éventuels frais légals, les intérêts moratoires dans la mesure pratiquée par les banques pour les financements a bref terme.
9. Les controverses éventuelles sont exclusivement de compétence du Forum de Turin.

coram-srl.com

Coram srl

Via Vigone, 53/55
10061 Cavour (TO)
Italy

Tel +39 0121.6366
Fax +39 0121.6305

coram@coram-srl.com